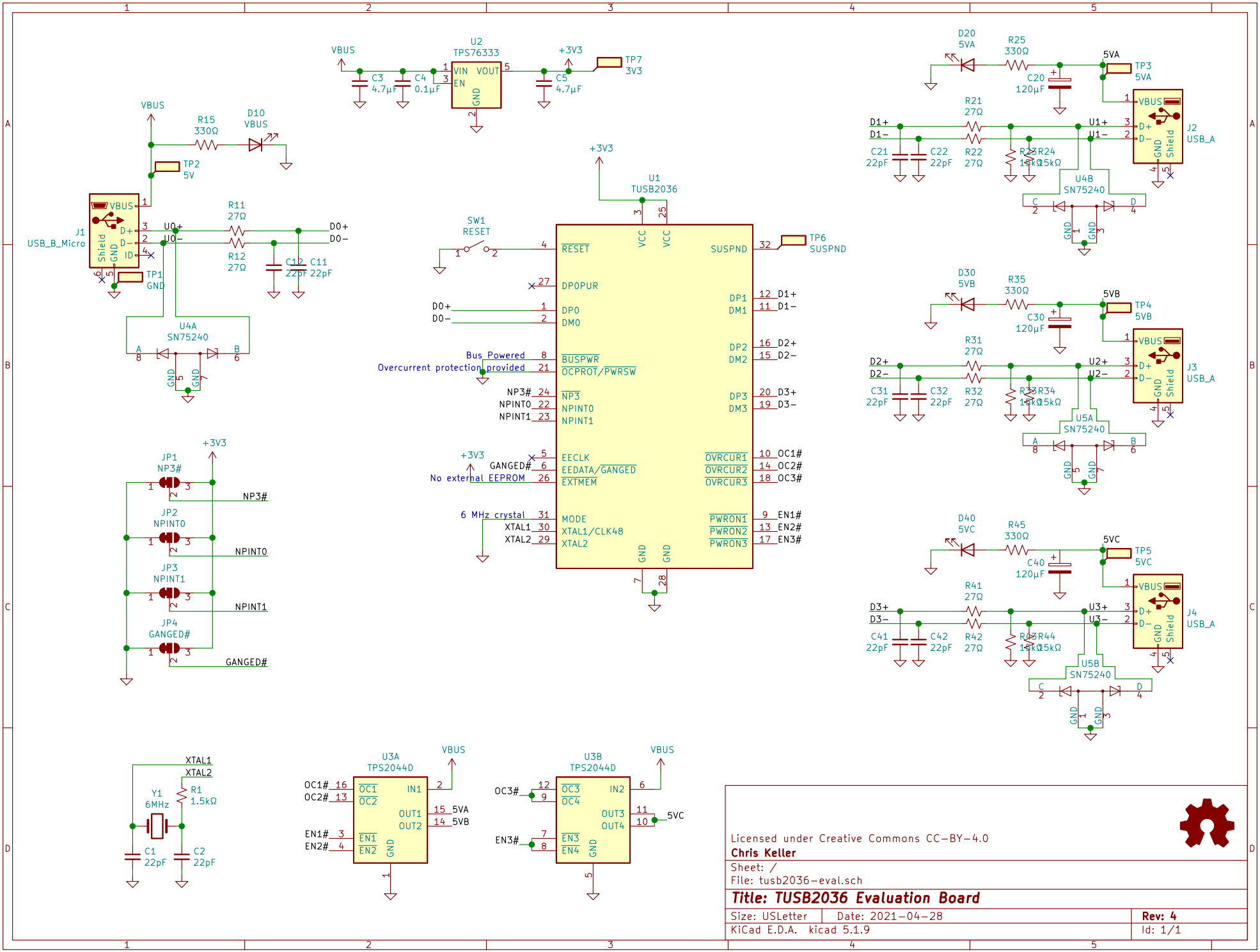


Licensed under Creative Commons CC-BY-4.0

**Chris Keller**

Sheet: /

File: tusb2036-eval.sch

**Title: TUSB2036 Evaluation Board**

| | | |
|---|---|---|
| Size: USLetter | Date: 2021-04-28 | Rev: 4 |
| KiCad E.D.A. kicad 5.1.9 | | Id: 1/1 |