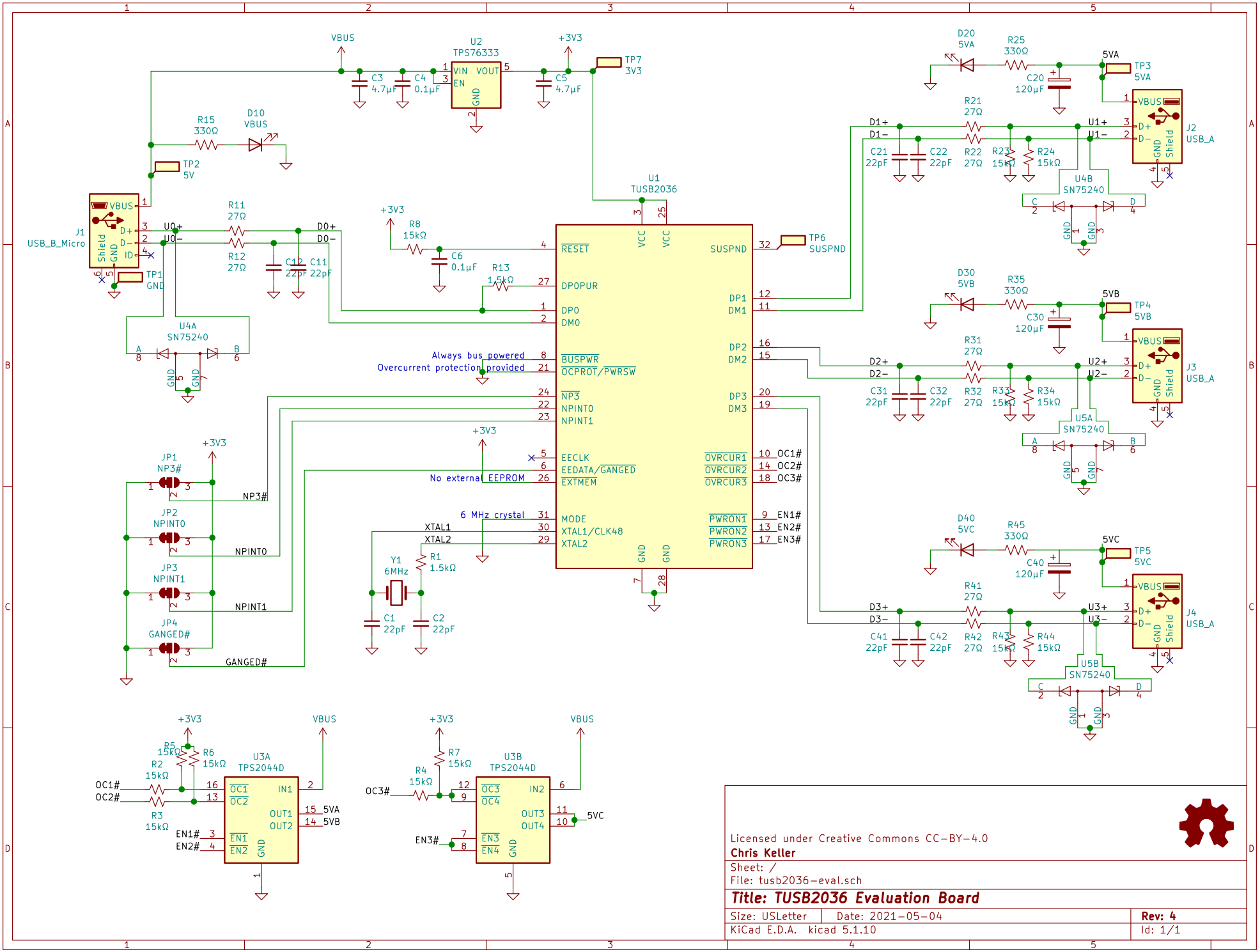

Licensed under Creative Commons CC-BY-4.0

Chris Keller

Sheet: /

File: tusb2036-eval.sch

Title: TUSB2036 Evaluation Board

Size: USLetter	Date: 2021-05-04	Rev: 4
KiCad E.D.A. kicad 5.1.10		Id: 1/1