Requirements and Software Architecture 20/21

Smart Home Energy System Management

(Version 2.0)

Alexander Denisov 44592
André Sousa 52405
Samuel Robalo 41936
(Group 7)

NOVA SCHOOL OF SCIENCE & TECHNOLOGY

10 June 2021

Contents

1 Introduction **3**
1.1 Purpose . . . 3
1.2 Motivation . . . 3
1.3 Structure of the document . . . 3

2 Domain Description **4**
2.1 Glossary . . . 4
2.1.1 Terms . . . 4
2.1.2 Acronyms . . . 4
2.2 General knowledge about the domain . . . 5
2.2.1 Brainstorming Sessions and Discussions . . . 5
2.2.2 Mind Map . . . 6
2.3 Environment and context . . . 7
2.3.1 Context Diagram . . . 7

3 Initial user requirements definition **8**
3.1 Description of stakeholders and their goals . . . 8
3.2 Description of the system scope . . . 8
3.3 Main user stories . . . 9
3.4 Preliminary Requirements . . . 12
3.4.1 Elicitation - Interview . . . 12
3.4.2 Elicitation - Questionnaire . . . 13
3.5 Constraints . . . 14
3.6 Risks . . . 15

4 System requirements specification **16**
4.1 Requirements . . . 16
4.1.1 Functional Requirements: . . . 16
4.1.2 Non-Functional Requirements: . . . 16
4.2 NFR Framework . . . 17
4.2.1 NFR Conflicts . . . 17
4.2.2 Softgoal Interdependency Graph . . . 18
4.2.3 Goal-tree diagram . . . 19

4.2.4 Softgoal Interdependency Graph explanation 20
4.3 Sustainability 21
4.3.1 Sustainability Awareness Framework 21
4.3.2 Sustainability Catalog 22

5 iSTAR Model **27**

6 Architectural Patterns **28**
6.1 4+1 View Model 29
6.1.1 Use Case View 29
6.1.2 Logical View 31
6.1.3 Development View 32
6.1.4 Physical View 35
6.1.5 Process View 36
6.2 Sense-Compute-Control 38
6.2.1 Smart Socket 38
6.2.2 Hub 39

7 Conclusions **40**

8 Acknowledgements **41**

9 References **42**

1 Introduction

1.1 Purpose

This document purpose in context of Requirements and Software Architecture (henceforth RAS) is to design an energy management software system to empower households to control their energy spending in a more efficient fashion, while contributing to lower the peak energy demand required from the energy providers.

1.2 Motivation

Following the 2030 Agenda for Sustainable Development by the United Nations, there is a worldwide effort to go green, with solar panels, wind power and other alternative energy sources, which have been gathering momentum now days.

The domain of problem lies in lack of stimulation in the general population and absence of interest by big energy companies in finding appropriate measures to cut down dirty energies consumption.

It is a must for humanity and future generations to follow a more sustainable world based on renewable energy, our project seeks to help by providing a system that manages home environment power consumption.

In order to build an energy management system that can undergo any revision, we are aiming at creating a coherent and strong project plan by determining the application environment in which the system will run and identify and verify dependencies between the various components of the system.

1.3 Structure of the document

This document follows the structure of the IEEE-830-1993 Standard, may contain slight changes, due to the nature of this project being part of a course.

Next we will go into Domain Description, and explore the general knowledge of the domain and discuss the brainstorming sessions taken with other groups, followed by the creation process of the Mind Maps as well as the identification of stakeholders needs and initial user requirements for the system.

Following the Domain Description, we'll outline the system requirements, including Functional and Non-Functional requirements, as well as the NFR Framework and soft goals.

2 Domain Description

2.1 Glossary

2.1.1 Terms

AC Power Plugs and Sockets - Allows electric connection, used to power up an electronic device or machine via power cord.

Smart Socket - Allows control over an electric Socket, generally, monitoring power outputs or turning its providing power on and off, most actions are remotely triggered.

Hub - Hardware and Software based device that connects to or manages many other devices.

Powerline - System that has modular components where the main module has an Ethernet connection that allows network communication to other modules throughout a household's electrical lines.

Dashboard - Dashboard is where the user can visualize all the information related to the power consumption and management. It has graphs of power consumption, lets the user refine the data showed and lets the user interact with the graphs. Basically it is where all the electrical related data will be showed.

2.1.2 Acronyms

RAS - Requirements and Software Architecture

SHESM - Smart Home Energy System Management

SRS - System Requirement Specification

GRL - Goal-oriented Requirement Language

SIG - Softgoal Interdependency Graph

FR - Functional Requirements

NFR - Non-Functional Requirements

SCC - Sense Compute Control

2.2 General knowledge about the domain

2.2.1 Brainstorming Sessions and Discussions

There was a brainstorm session, where the class was split into two groups. Each Student had a task of trying to come out with possible stakeholders for the project and consequently interpreting his role to figure out what is their interest in the system, from this point on, groups start to come out with different ideas, given the principle that there are no bad ideas. In the end of listing our ideas each student had 100 points to distribute to the preferred ideas, the Top 4 ideas produced where:

1. A goal-tracking application, to outline goals to save energy, gathering information on daily consumption and offering tips for saving energy.
2. An application that allows us to know best time to do domestic chores, like using laundry machine or turning on dishwasher.
3. A system that controls the contracted energy to reduce non clean energy use, and if possible offer community packages aid.
4. Solution for harnessing unused energy in our company, when not in use, redirect it to other destinations.

2.2.2 Mind Map

The mind map generated from our ideas and elicitation process.

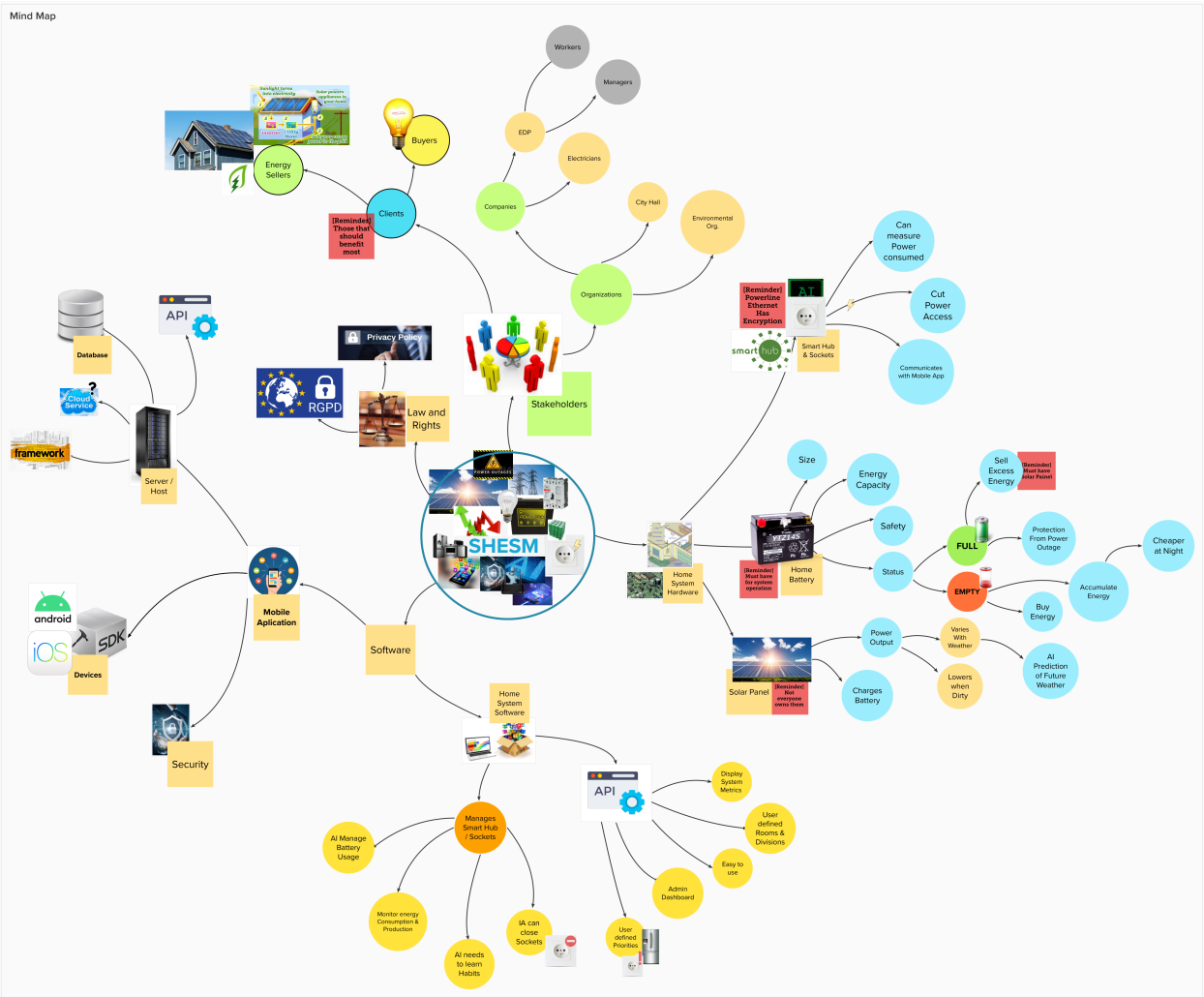

Figure 1: SHESM Mind Map

The Mind Map was generated from the elicitation and brainstorming ideas, so we came up with the concept of SHESM, which provides a mobile and web application to manage, control and get information about consumption and production of a household energetic supply with the aid of AI, similar to powerline system, it has power outlets or sockets, both In-Wall and Modular, supported by battery for improved power management during external power outages that can charge up during night time when energy is cheaper or during day if system has solar panels.

2.3 Environment and context

2.3.1 Context Diagram

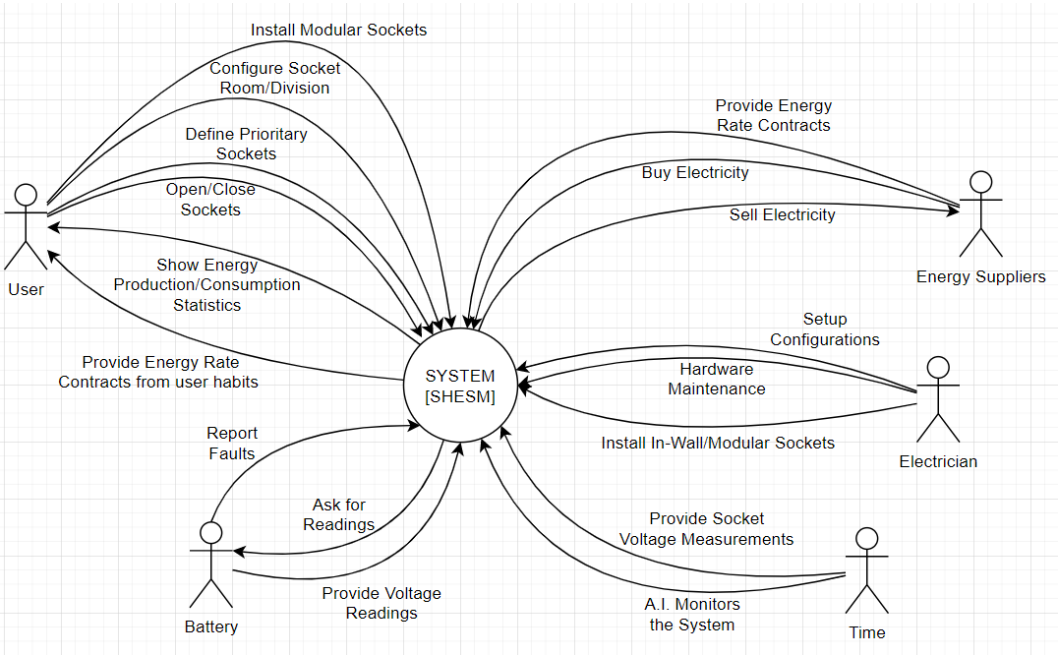

Figure 2: Context Diagram of SHESM

The system is composed of physical components, Batteries, one Hub, one or more Smart In-Wall Sockets or a Modular variant, and may contain Solar Panel integration. To interact with system there is an API, where the system can be configured and user can make actions, such as closing sockets, this can be performed via Mobile App.

Entities like Users, Energy Suppliers e Electricians, interact with the system. Users are the end-user of the system those that seek benefits from it, able to use mobile application to control and check information about the system. Electricians perform maintenance on the system, configure settings and install Sockets.

This will be further detailed in the next section, as part of the initial requirements.

3 Initial user requirements definition

3.1 Description of stakeholders and their goals

Users - those that use and hold accounts on SHESM system. Some goals include contribution towards clean energy usage, prevent household power outages, control energy consumption, remotely manage systems via mobile apps, easier lifestyle, and others.

Energy Suppliers - those that provide energy to households. Some goals include economic benefit, satisfying client power needs, contribute and adopt clean energy usage, and others.

Governments - is the system to govern a state or community, some goals include the Sustainability Goals, Privacy Policies, Moral values, Economic Values, Welfare, and others.

Electricians - can perform maintenance on a household electric system, including the SHESM system. Some goals include Market opportunities, Profit, client satisfaction, Security, Well Being, and others.

3.2 Description of the system scope

The system is built upon a household energy grid, having a battery between the power meter and power breaker, also undefined number of power outlets that can monitor energy consumption, we call them smart sockets, also in a modular plug fashion for non smart power outlets, these smart sockets are similar to a powerline capable of communicating on the household energy grid, these are monitored by a smart hub that deal with the logistic part of the system using AI, being able to turn on and off sockets to prevent energy waste, or turn off sockets on near power starvation, that on certain occasions would cause the power breaker to shutdown.

The system can handle energy production from internal sources, such as solar panels, and external sources, such as an electric company.

The Smart Hub provides an API, that allows a mobile app or web browser to communicate and interact with the system. For a measure of security the system has a control panel, so a user can login to configure specifications, such as, which sockets belong on certain division/room and which sockets are important to maintain power upkeep at all times (e.g. Refrigerators), the control panel has a dashboard with all the information of energy consumption/production, from the sources, by division and by sockets, other options and configurations are also available there.

The above description is naively depicted next.

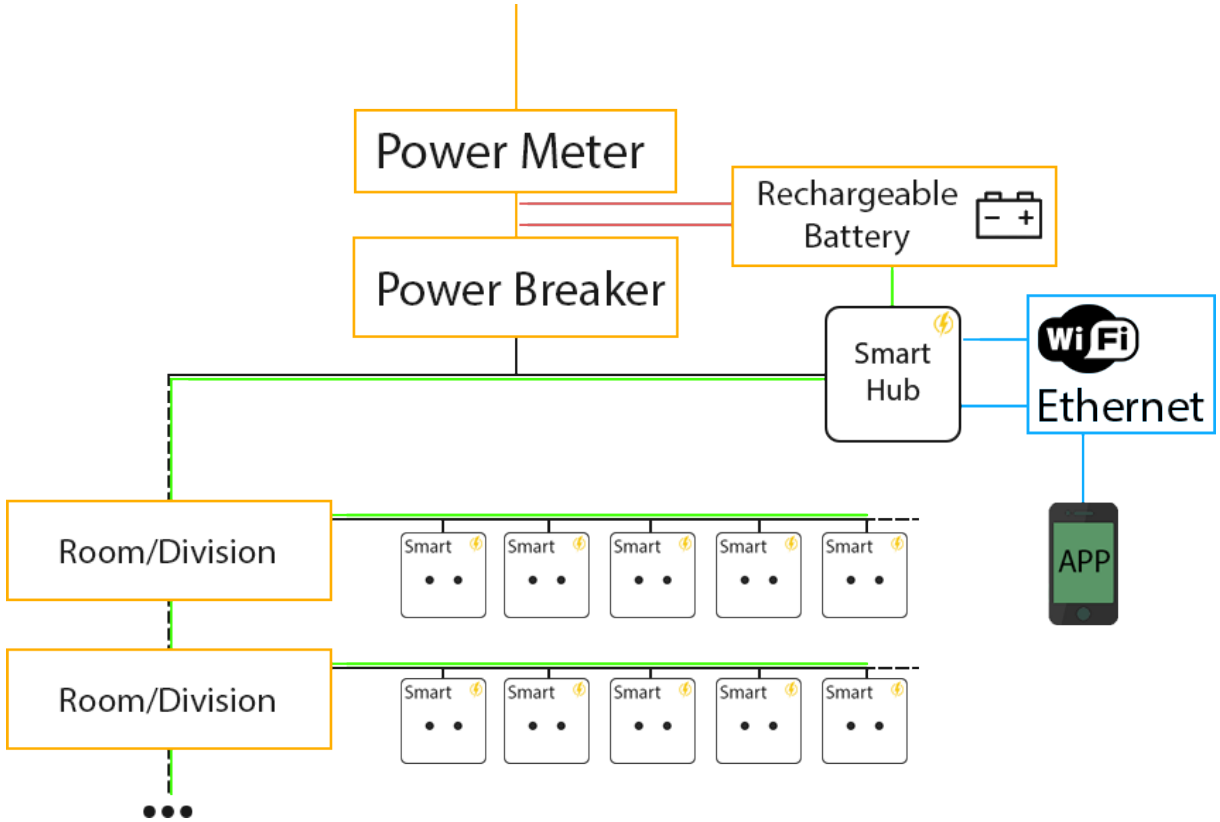

Figure 3: Naive depiction of SHESM

3.3 Main user stories

Name: User Login
Description: As a user I want to login so that I can access the Dashboard.
Confirmation:

1. Success: Valid user logged in and redirected to the Dashboard.
2. Failure: Show an authentication error message and a reason.

Name: User Logout
Description: As a authenticated user I want to logout so that I can switch account
Confirmation:

1. Success: user is logged out and redirected to Login page
2. Failure: Show an authentication error message and a reason.

Name: Dashboard

Description: As a authenticated user I want to access the dashboard so that I can view data about my electrical consumption.

Confirmation:

1. Success: user is logged out and redirected to Login page
2. Failure: Show an authentication error message and a reason.

Name: View Power Sockets

Description: As a registered user, I want to access Dashboard in the application, so I can view a list of plugged-in Power Sockets.

Confirmation:

1. Success: The user sees a list of Power Sockets.
2. Failure: The user sees an error message related to the issue.

Name: Add Power Socket

Description: As a registered user I want to associate a Power Socket to my account so that I can access information related with that Power Socket.

Confirmation:

1. Success: A new Power Socket is added and related information is showed on the dashboard.
2. Failure: The user sees an error message related to the issue.

Name: Remove Power Socket

Description: As a registered user I want to disassociate a Power Socket from my account, so that I don't get information related with that Power Socket.

Confirmation:

1. Success: The selected Power Socket is removed from the list of Power Sockets added
2. Failure: The user sees an error message and the Power Socket continues on the Power Sockets' list

Name: Manage Room/Divisions

Description: As a registered user, I want to configure the divisions of house, so that I can associate Power Sockets.

Confirmation:

1. Success: User views the house division in dashboard.
2. Failure: The user sees an error message related to the issue.

Name: Add Room/Divisions

Description: As a registered user, I want to view House Divisions, so that I can add or remove division.

Confirmation:

1. Success: User created a new house division.
2. Failure: The user sees an error message related to the issue.

Name: View Eco Savings and Power Statistics

Description: As a registered user, I want to view the Dashboard, so that I can view graphical statistics of my Power Consumption, Power Production, Battery Level and saved Co2 from Green Energy usage in real-time.

Confirmation:

1. Success: User views the graphical statistics.
2. Failure: Placeholder saying "Graphical statistics unavailable".

Name: List Contracts

Description: As a registered user, I want to view a list of possible contracts based on my information (power consumption, time of day with more power consumption, etc).

Confirmation:

1. Success: A list of possible contracts is showed.
2. Failure: The user sees an error message related to the issue.

Name: Define an important Power Socket.

Description: As a registered user, I want to view the Dashboard, so that I can select Power Sockets that require constant fully functional state.

Confirmation:

1. Success:
   (a) Power Socket importance level updated.
   (b) Popup message: "Power Socket importance level updated".
2. Failure: Popup message: "Failed to change socket Priority".

3.4 Preliminary Requirements

3.4.1 Elicitation - Interview

A brief interview with EDP Commercial revealed that most of the effort on saving power must come from clients, main reason is because the population habits greatly impact power consumption, EDP already has projects underway contemplating the sustainability goals and making constant transition towards clean energy sources and suppliers, examples such as Smart Grids[1], one system that was mentioned was PREDIS, which focuses in big data and advanced analytics to improve the energy distribution on the power grids.

This conversation with the commercial confirmed our idea that project can in fact help people to save money and is a good idea because EDP is also creating a project like this with the same ideas to try help people saving money.

The questions aren't showed because this interview was more like a conversation between the group and the commercial, but the main ideas are explained and also because the commercial asked for us not to reveal the questions.

[1] https://www.edp.com/en/innovation/smart-grids

3.4.2 Elicitation - Questionnaire

In an initial phase we decided to make a small questionnaire to understand what users were expecting the app to do. With the responses we were able to create more precise functional requirements and soft-goals, although we had only 8 responses.

The questionnaire included a few personal questions like the type of house, type of current electricity contract, etc, just for us to understand the characteristics and preferences of the future users of the app. We made also some questions about some habits related with electricity consumption. These were an addiction to the main questions which were related with functionalities the system should have.

Our questionnaire revealed some of the system end-user needs, everyone wants to save their money on electric bill, due to the nature of the system we can say it all age groups are inherently affected by it, mobile applications might have more usage on a range of 18 to 60 year old users, as newer generations are more experienced with mobile applications the future predictions reveal higher age limits.

About confidentiality, most users don't mind sharing data for application development, better end product and better services, however a trustworthy entity and information about what data is being shared, would give users more freedom on their choices and acceptance towards data sharing, vast majority don't want their data shared with 3rd parties, any data they share should be targeted for internal use only.

The survey participants claim to have time-of-day tariff, no participants had bi-schedule.

Full questionnaire can be found on the link below:
`http://unlimitedcontents.wikidot.com/local--files/start/questionaire`

3.5 Constraints

The system contains several constraints in different areas.
Economics:

1. Installation of such a system will come with a higher cost.
2. Hardware and Software investment.
3. Maintainability cost.

Political:

1. Opposition from Coal/Oil production companies.
2. Energy Providers allow integration in their system.

Technological:

1. Use of Smart Sockets.
2. Use of Battery.
3. Access to some functionalities inhibited due to absence of components (solar panel, internet connection, no smartphone).

Social:

1. Users of Old Age.

Existing systems:

1. System Uses existing products (batteries, sockets, panels).
2. System integrates into Electrical System.

Environment:

1. Regulation on e-Waste

Schedule and resources:

1. Slow introduction of the product to the market due to social/economic/political reasons might generate higher costs on personnel and stretch schedule of objectives.

3.6 Risks

The system requires a battery, regarding the battery, the battery type might be of some importance as it can lose capacity or efficiency with time, it can also explode or malfunction due to; where it is placed, weather conditions, floods, overheating and other unforeseen events.

4 System requirements specification

4.1 Requirements

4.1.1 Functional Requirements:

- The System shall display energetic consumption for each house division.
- The System shall display energetic production.
- The System shall display information about power savings.
- The System shall display current energetic price.
- The System shall display alternative energy contracts based on the user's power consumption.
- The System shall display the cost of having other energy contracts.
- The System shall display battery level.
- The System shall allow selling excess energy.
- The User shall be able to remotely turn off individual sockets.

4.1.2 Non-Functional Requirements:

1. "Privacy"
   - The System shall protect user privacy.
2. "Security"
   - The System shall have encrypted connection on socket communication.
   - The User shall have an account.
3. "Availability"
   - The System shall stay fully functional even on power outages.
4. "Safety", "Functionality"
   - The System should cut power to sockets autonomously.
5. "Usability"

- The System should be accessible and easy to use.

6. "Interoperability"
   - The System shall communicate with the Hub in real-time.
   - The Hub shall communicate with one or more Sockets in real-time.
   - The Hub shall discover all connected Sockets.
7. "Recoverability"
   - The System shall recover previous functional state in case of outage.

4.2 NFR Framework

4.2.1 NFR Conflicts

NFR's	Privacy	Security	Availability	Safety	Usability	Interoperability	Recoverability
Privacy			X				
Security		0	X		*		0
Availability	X	X		0			0
Safety			0				
Usability		*			0		0
Interoperability							
Recoverability		0	0		0		0

Absolute conflict: X
Relative conflict: *
Never conflict: O

Figure 4: NFR conflict relationships

4.2.2 Softgoal Interdependency Graph

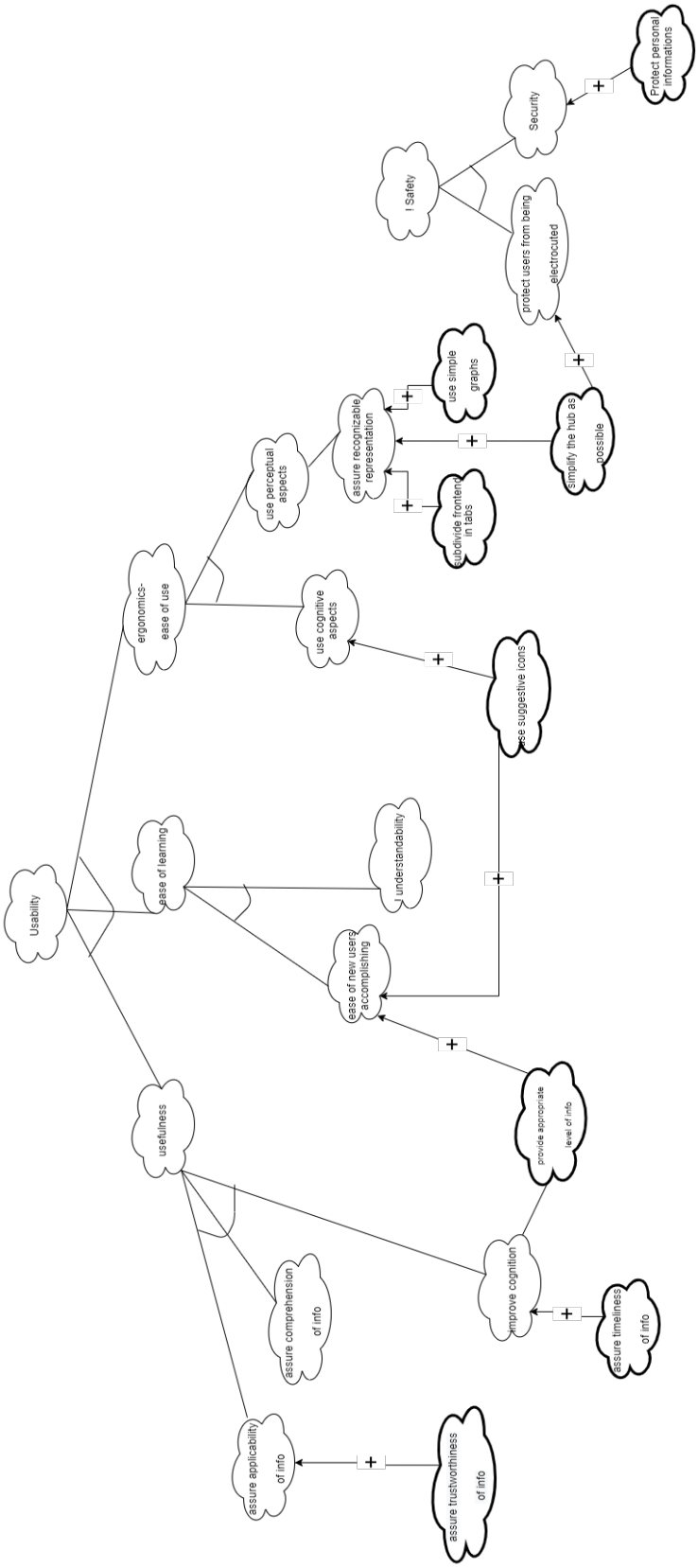

Figure 5: Softgoal Interdependency Graph

4.2.3 Goal-tree diagram

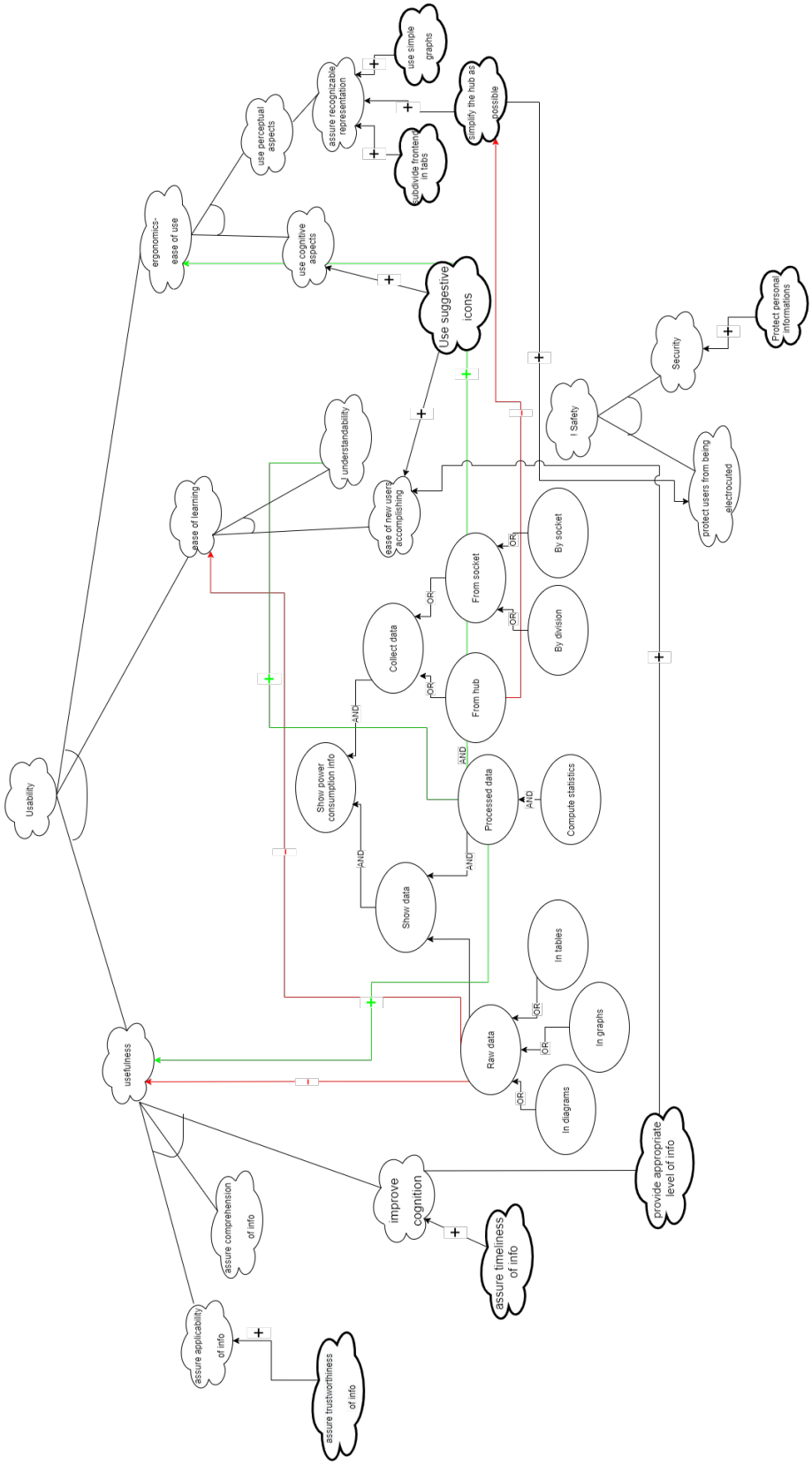

Figure 6: Goal Tree Diagram

4.2.4 Softgoal Interdependency Graph explanation

Before creating the Softgoal Interdependency Graph we ordered all the softgoals selected to the project by importance. The softgoals first in the selection were safety, understandability and usability.

These were the ones selected because of their crucial paper on the project. Safety was fundamental because our project works with power sockets connect to the electricity. This connection may be made by the user. Since the idea is to help ordinary people with or without technical knowledge, the power sockets have to be safe to avoid people from being electrocuted.

Since the main goal of the project is to provide the users some control and information about their electricity consumption, is crucial that the users understand what they see and what that means, so they can take decisions and make changes that can in fact help them. To acquire this understandability is fundamental.

But only understandability is not sufficient, the user needs to understand easily how to use the app, because if he can't use the app all the idea of the project wouldn't be achieved. Based on this, usability was chosen to be part of the SIG.

Although we couldn't find some catalogues to help us, we didn't want to give up on this NFR's because we consider them fundamental to achieve the main goal of the project: help the users.

4.3 Sustainability

4.3.1 Sustainability Awareness Framework

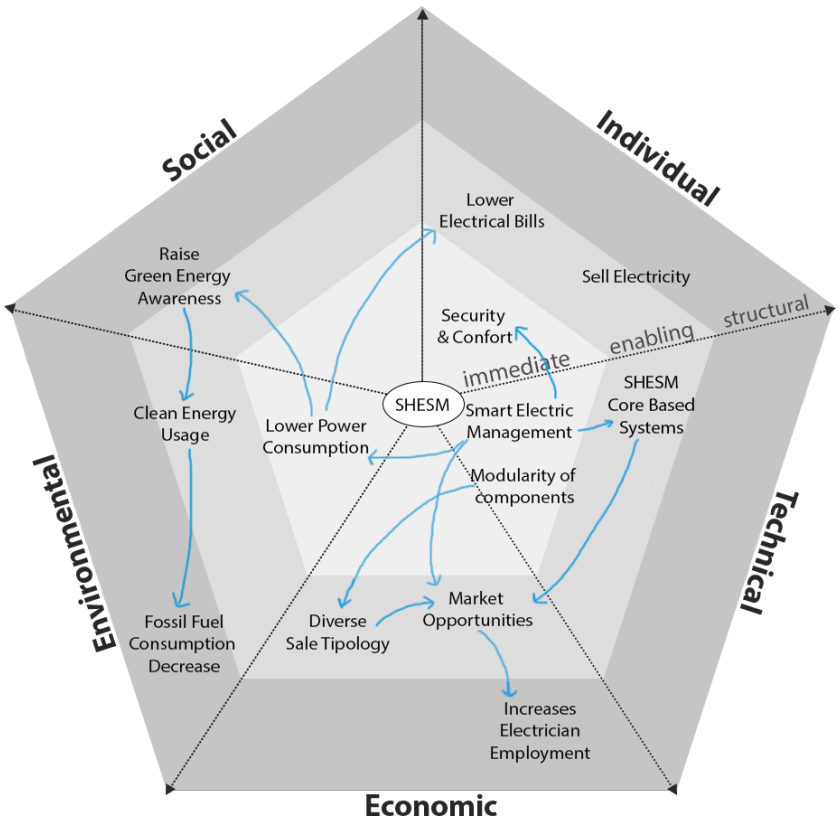

Figure 7: SusAD diagram of SHESM

The system SHESM promises a Smart Electric Management, as shown in the SusAD diagram, this will benefit multiple aspects of sustainability, including new systems that may derive from SHESM itself, e.g. instead of having multiple Smart Sockets from Google Assistant, Amazon's Alexa and others, a household can centralize the electrical control with SHESM Hub and allow commands to sockets via API and token authentication. This opens up new market opportunities and given the modularity of the system also allows different components to be sold separately, can be bought by parts, the full price of such system depends of the household typology, electricians can provide maintenance and benefit from this opportunity.

On the Social aspect, raises awareness towards green energy usage, as the system contributes to lower power usage and expenses, in turn would make a beneficial impact on the environment by using more clean energies and reducing Fossil Fuel consumption, households with solar panels installed will have an even greater impact, by also enabling Electricity to be sold.

4.3.2 Sustainability Catalog

We start by using the Sustainability Catalog and draw colored zones on the NFRs that make most sense in our system from our insights of it.

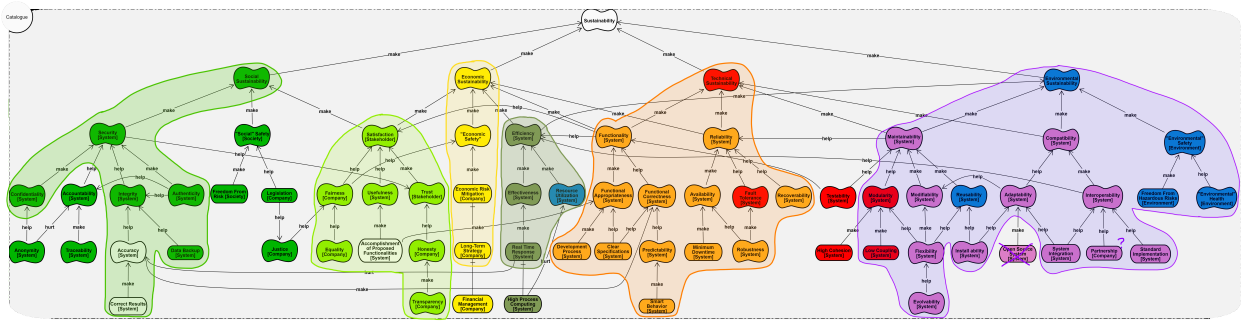

Figure 8: Sustainability Catalog

We think this is the most accurate representation of the Sustainability Catalog for SHESM, even if changes might occur we can change this areas with unwanted or wanted NFRs, due to the size of image might be hard to understand, but we will now proceed to break down each colored section and explain why.

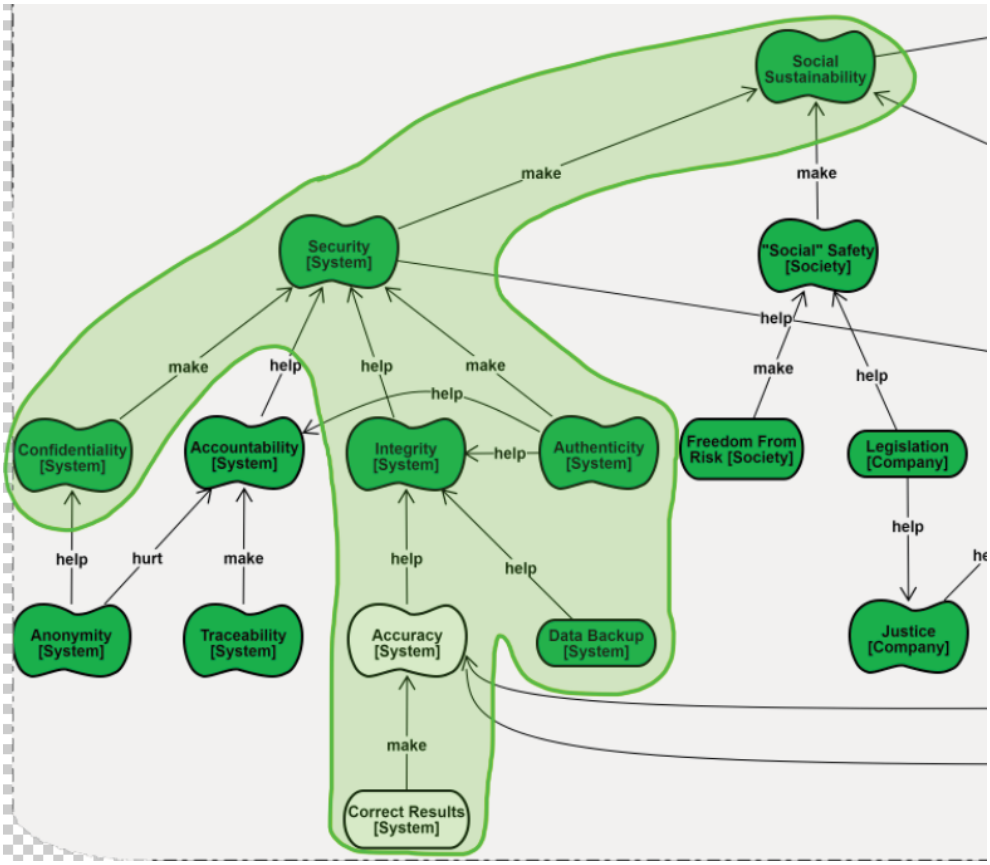

Figure 9: Social Sustainability

The Mobile application, Hub and API contain Local Resources and Remote Resources, some information is stored for Backup, as the system itself doesn't provide full Anonymity as there is an account bounded to the system, yet some data is confidential, e.g we might have data from the user home address or phone number, so inherently is part of the system security.

The system heavily relies on the data accuracy, most of which, is read from Sockets, Accuracy is also required for Functional Correctness because the IA mechanisms involved require data accuracy to provide early actions and take measures accordingly. We decided Traceability to be left out, because tracing user actions only happens on a Artificial Intelligence level, to better predict required action to make, and most of that data is unrecognizable and prepossessed, only the AI knows how to make use of it. Lastly Social Sustainability is also helped by user Satisfaction, as the system targets it's usefulness towards the individual and the community alike (by raising clean energy awareness and reducing negative impacts on the ecological environment), we will discuss next the reasons why SHESM provides Satisfaction.

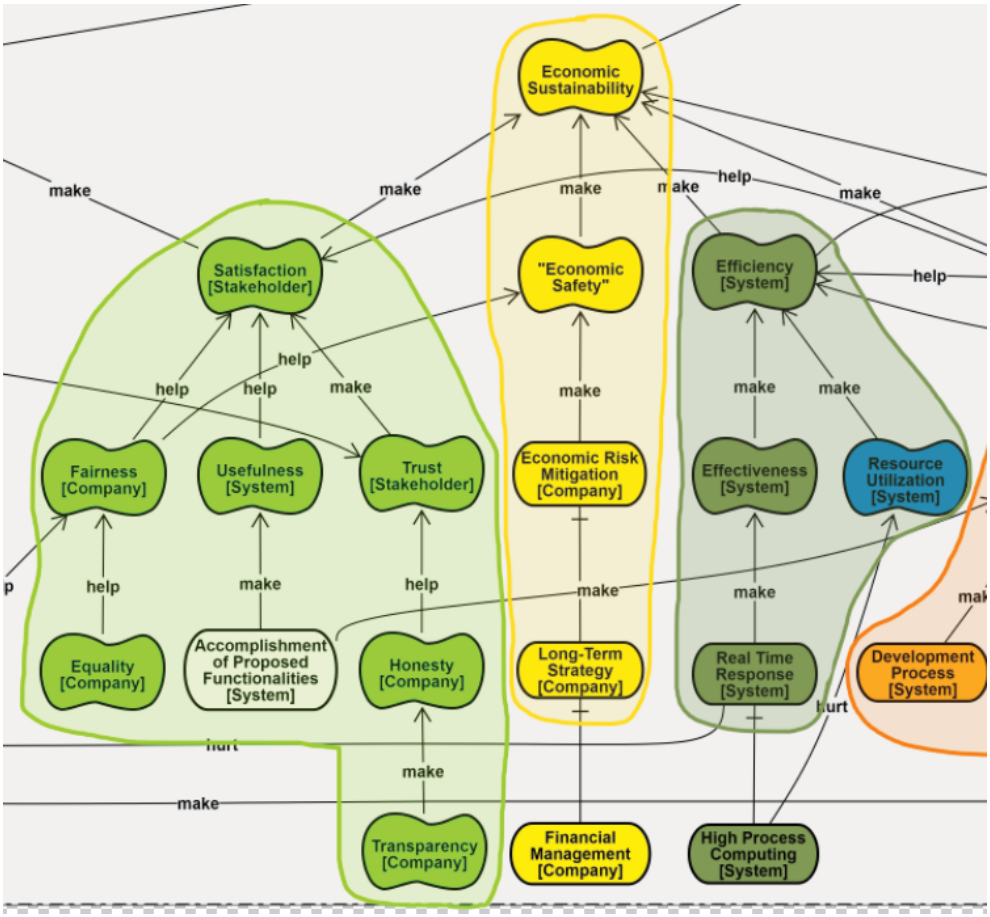

Figure 10: Satisfaction, Economic and Efficiency Zones

Working towards Economic Sustainability, requires customer Satisfaction which is provided by the Usefulness of the system and the target of making a Smart Home Ecosystem, there is initial investment on such system, but ideally, smart power sockets or modular variants should be made cheaper and on higher amounts then rest of the hardware required, with mainstream availability to the general public, to be treated as if, a normal power socket. About efficiency, Hub stores and processes socket information and will utilize local resources as well as remote resources, Real Time response is required by part of the system, which is related to the Socket and Hub data exchange, this will provide Effectiveness as the system needs those values promptly to act accordingly. However, is expected some delay, related to the API and network communication with mobile app or browser.

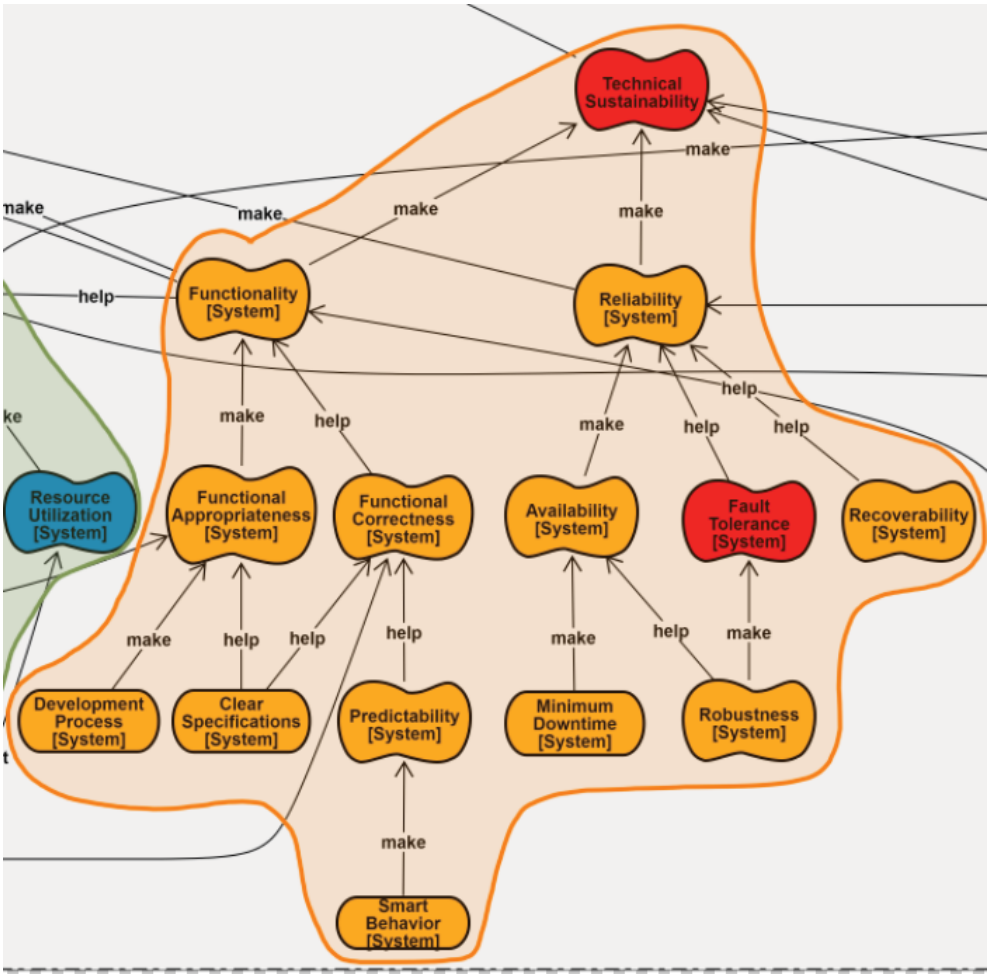

Figure 11: Technical Sustainability

The Technical Sustainability, contain most of the features expected from SHESM, the Functionality and Reliability can be further broken down, the AI provides a Smart Behaviour to predict and apply the required actions upon the system, requiring the Development Process and Clear Specifications of how the AI works and what it does, as well as the API methods and the assurance required to guarantee its Functionality, which is also beneficial for updates and further development, the system functionality is expected to be long lasting.

As for Reliability the battery comes into play, as it gives greater robustness to the system, making it Fault Tolerant on power surges, further more the AI itself helps by disabling sockets on near power surge even when the battery level is critical, preventing a potential power outage, thus making the system Available. Even on extreme case the system should be able to restore previous states and recover data, and learn from said data, to prevent another outage if possible at all.

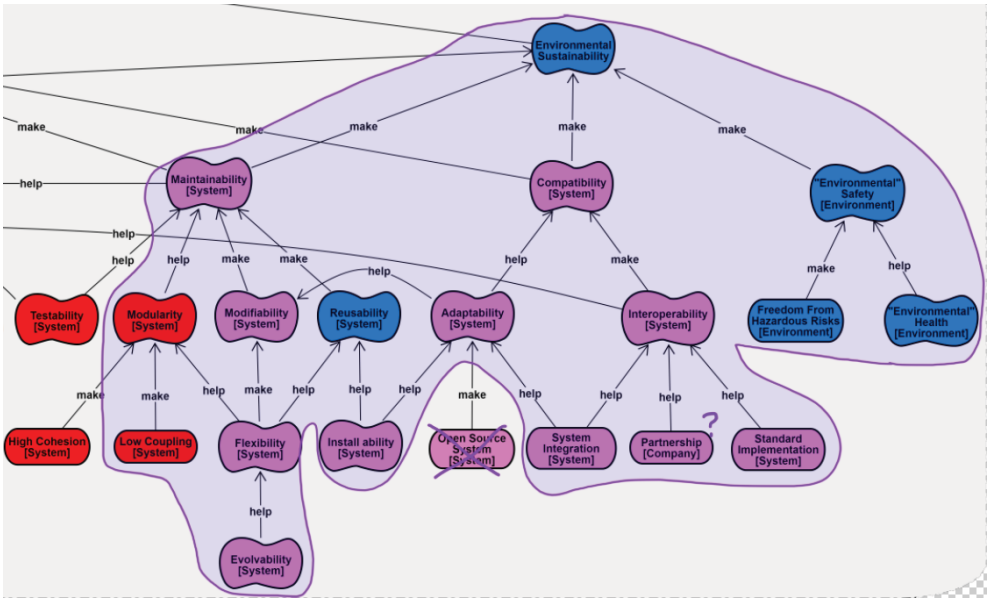

Figure 12: Environmental Sustainability

In terms of Hub and Sockets, the system itself proves his strong points, as it is highly modular, modifiable, flexible, compatible and adaptable, and on a hardware perspective Sockets require no awareness of each other, hence the Low Coupling, as data and communication is mostly assured and processed by the Hub, the sockets mostly make voltage measurements and allow power to flow through the power outlet.

We opt out Open Source System as the system would require a conceptual and world wide acceptance to adopt smart sockets and battery as part of household needs, of a similar level as water and electricity are a basic need, system would then can serve as a base for other technology to depend on, given the empowered electrical capabilities of a household, eventually obtaining a Community that would collaborate towards the betterment of the system.

Since the one of the concerns is the environment and better use of energy, "Environmental Health" is inherent of SHESM, by being an enabler of renewable energy usage and energy efficiency, we included "Freedom from Hazard Risks" as the system itself, battery, hub and sockets don't pose immediate threat, should be considered as dangerous as any other electronic device when considering its use.

About Partnership of Companies helping the system, we had some doubts, but since we receive company contract details via API, so system can display their information to the user and advice user about best plan based on consumption habits, in this sense, we included it.

5 iSTAR Model

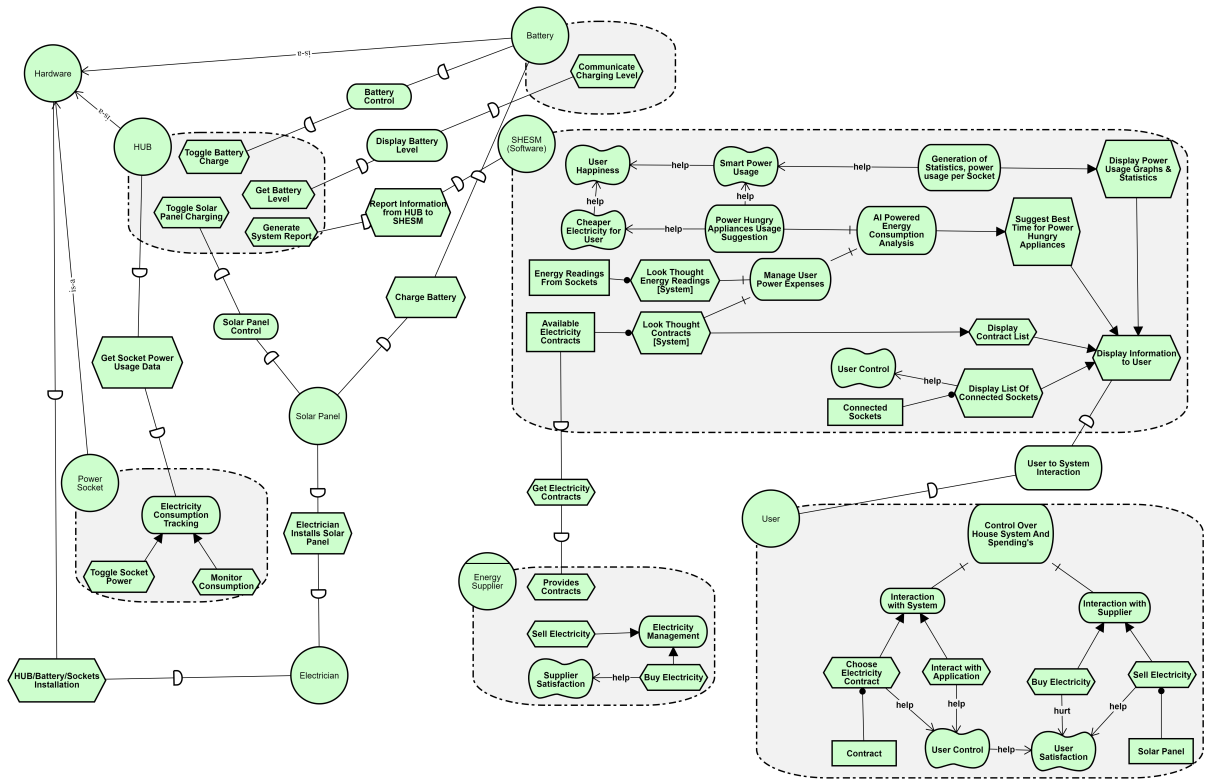

Figure 13: i* Rationale Model

The system is highly reliable on its peripheral hardware, sockets, hub, and battery, these can be installed in the user house by an electrician. These peripheral main tasks are the collection of various data, statistics of power usage, production of electricity in case of user had solar panels and communication of this data to the main system for further analysis. Energy Suppliers establish electricity contracts with users and provides different contracts to choose from. Users interact with the system via phone app. For simplicity's sake, we encompass the server and client-side of the application in the concept of SHESM [Software]. SHESM is where information from HUB and Application is processed via AI-powered Algorithms, it creates useful statistics for the user to see and make better usage of its home power, for instance, it displays the time of day where power consumption for wash machine is at its peak and superimposes with the cost of electricity in that period of time, further suggests different time schedule for its usage.

6 Architectural Patterns

Due to the system complexity we required usage of two architectural patterns, composed by two main parts. The first part is refers to the communication at a hardware level of the system, between Hub and Sockets. The second part represents the logical aspect of the system between the API, the application and data processes.

We based the implementation of the first part of the system on a Sense–Compute–Control pattern. The group chose this design pattern because it offers independence between the application software and the hub with the power sockets connected to it. This model also offers the possibility of sharing a high level controller code between different sensors and actuators, which is great to describe its functionality at a hardware level.

Although, the second part benefits most from the Model–view–controller pattern since it offers a separations between the model (database management system), the view (representing the the objects from the interface with the user) and the controller (the application), which we found suitable, because its fits our needs for the system and is one of the most used patterns.

Because of the necessity of achieving these two parts, we used these two patterns, MVC and SCC.

6.1 4+1 View Model

The 4+1 view model is used to describe the system from the views of several stakeholders, giving the reader a comprehensive understanding of the system from several angles. The following viewpoints that come with the model are, Use Case view, Logical view, Development view, Process view and the Physical view.

6.1.1 Use Case View

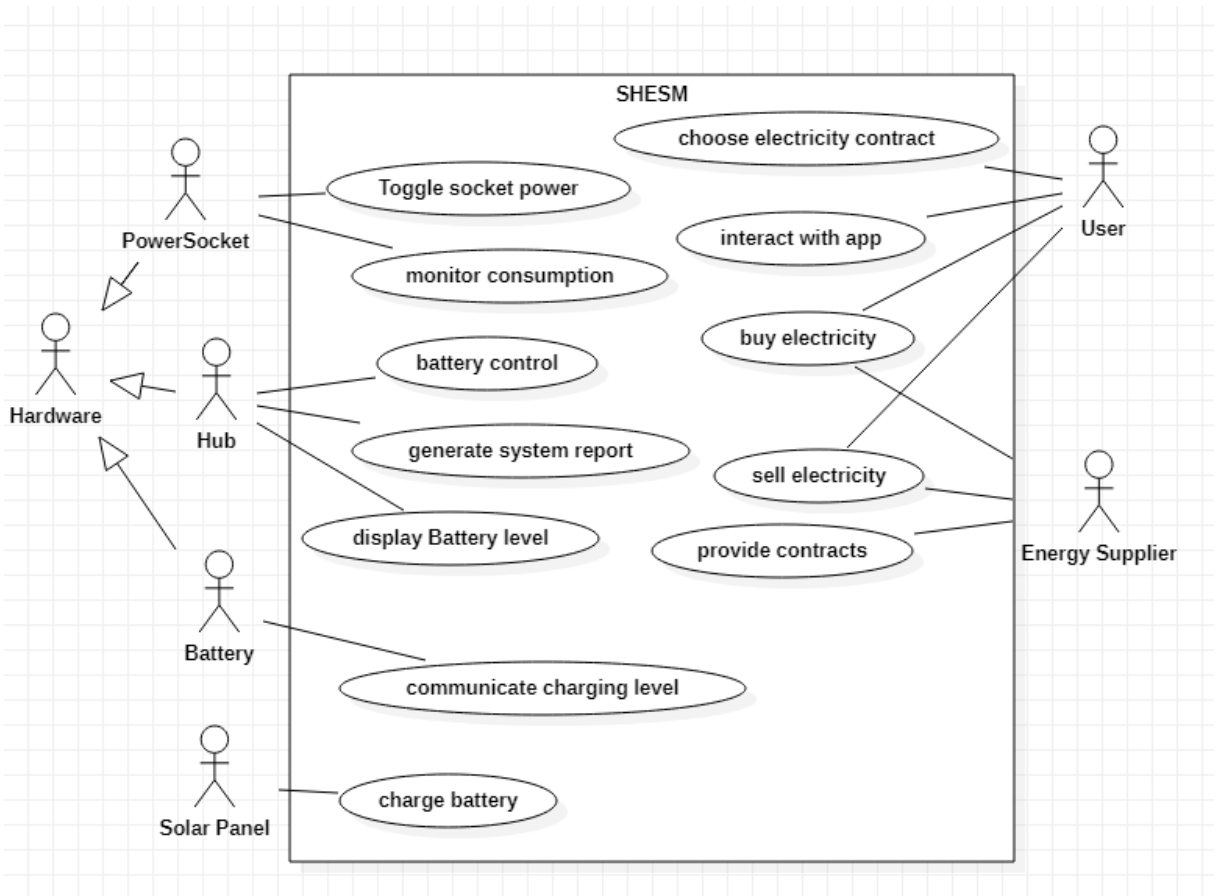

Figure 14: UML Use Case Model

With the progress of the project, we had the necessity to convert the iStar model to a Use Case diagram. We started by identifying the iStar actors boundary, that would become the system boundary in the Use Case diagram.

In our model the System boundary is the SHESM, which is our system. With the first part done, the next step is looking to the i* actors and select the ones who would become an UML actor.

Were identified three actors (Hub, PowerSocket and battery) that are part of a bigger actor, the hardware. These three actors have their specific use cases that differentiate them.

All these three actors are a "is-a" in the iStar model, so in this diagram they are also part of the hardware.

Both the user and the Energy Supplier are able to sell and buy energy, since that a person can sell energy to the company, if has a solar panel (which has), and can also buy energy, that is the normal flow. The energy supplier is able, as normal, to sell energy to the clients, but may also buy from them in case of lack of energy produced by the company. Because of this, both actors share the same use case "buy electricity" and "sell electricity".

The use cases were based on the tasks of the iStar model and also based on the goals of that same model. The solar panel was also added as an actor because of its crucial work in the process of, for example, selling energy. Without a solar panel the system cannot produce energy, so the user wouldn't be able to sell energy (other energy producing methods exist but our system focuses on the main target of the app, the normal users, so the other methods are less common.

6.1.2 Logical View

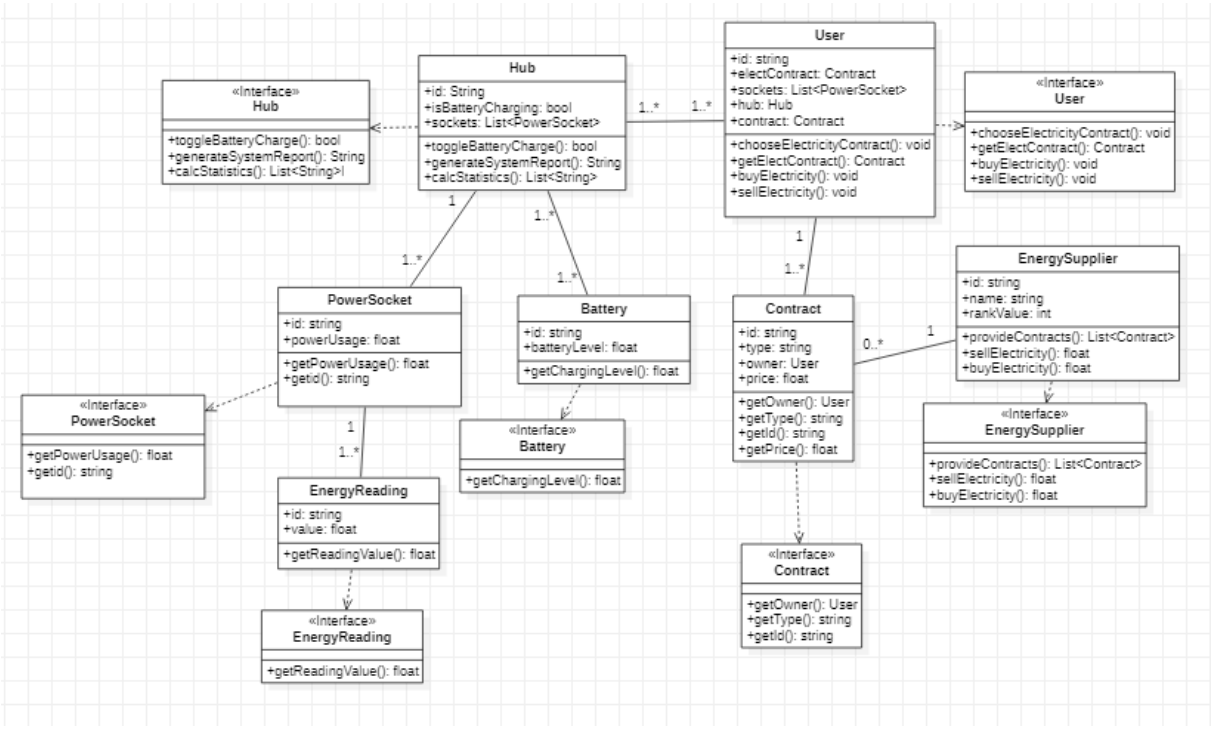

Figure 15: UML Class Diagram

Since iStar actors can become classes on the class diagram, we started by identifying the actors that would become the classes, following the rules of i* to UML, e.g. the solar panel was discarded because it wouldn't fit as a class since it is a physical component that wouldn't be programmable.

Some resources from the iStar (like the energy contracts or the energy readings) became part of the class diagram as classes because of their crucial paper connecting the main components and also because their definition was needed so the system would be able to know their configuration in order to work with them and take the needed information from them.

The operations of the classes were based on the tasks and some goals from the iStar model. The attributes selected to each class were the ones we thought would be needed to develop the program. We defined id as string to be used as UUID, allowing many unique identifiers. Other attributes like Boolean or Lists were created to support the system too.

6.1.3 Development View

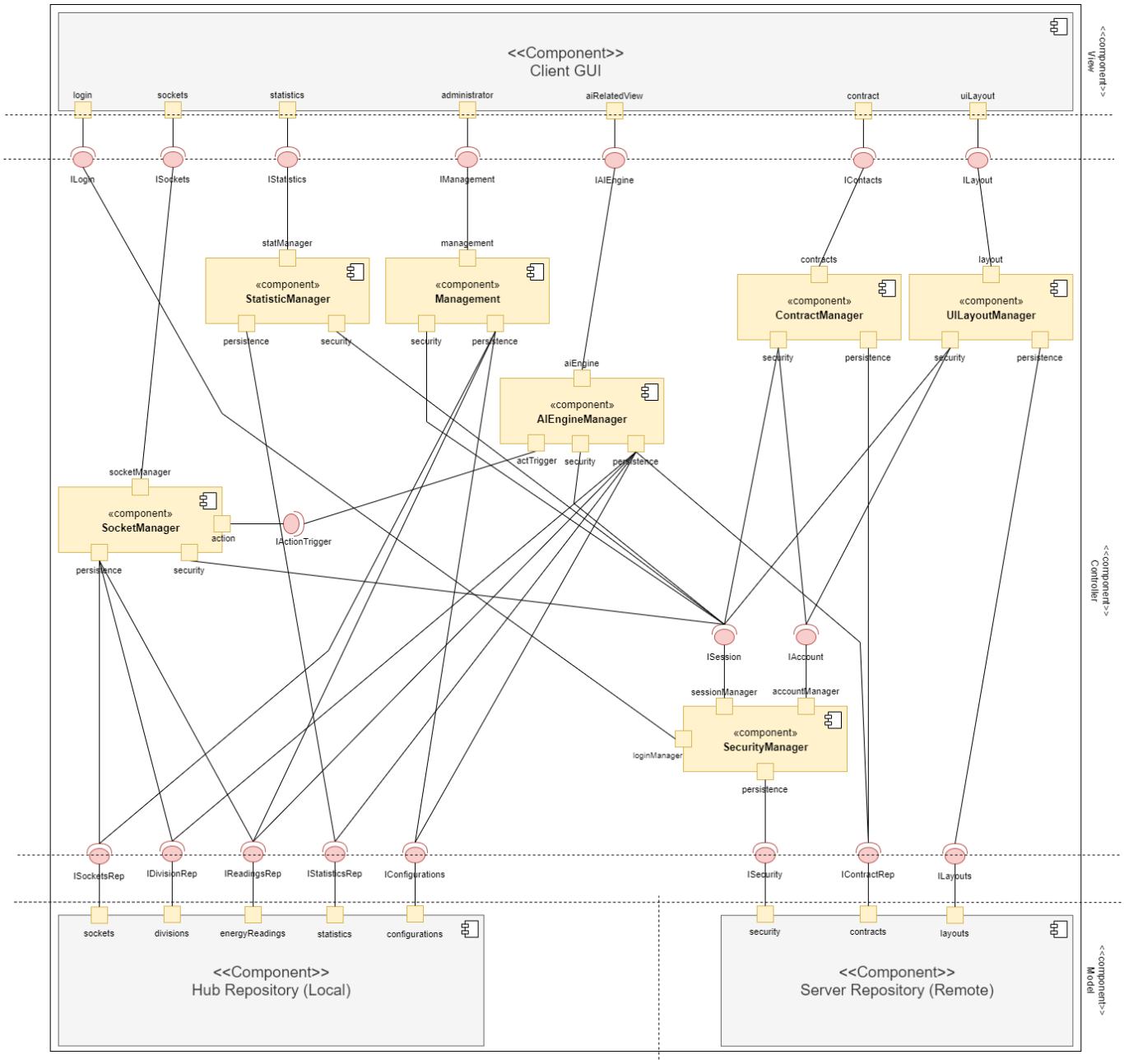

Figure 16: Development View

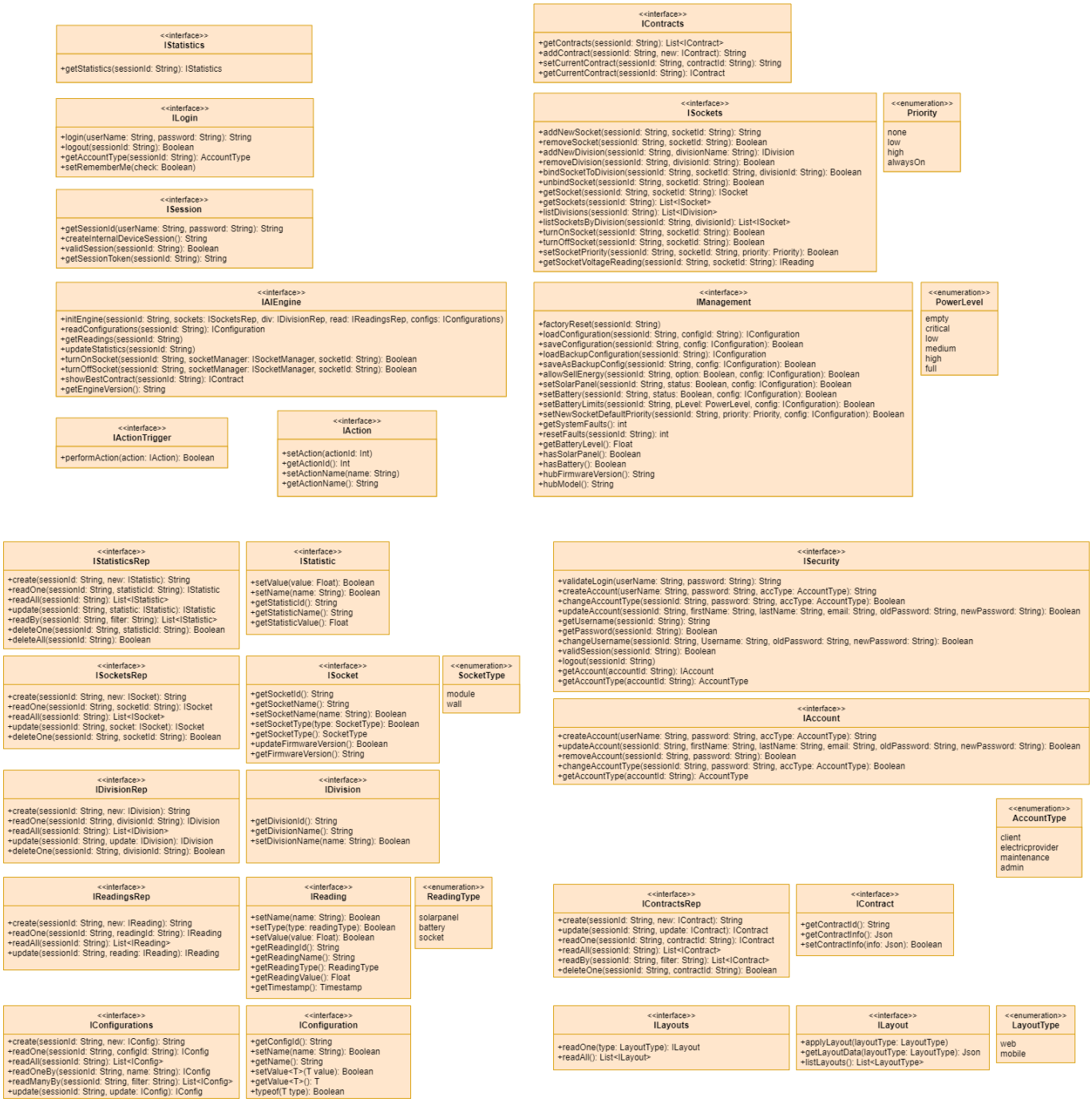

Figure 17: Interfaces

The development view is made for system developers and software managers. We use UML Component Diagram to describe system components. Since we also adopted MVC, and with that in mind, the dotted line in the figure serves as a separator for different layers of the MVC model. Topmost we have Client GUI component, on the View layer, through interfaces it is connected to the Controller layer, it grants abstraction helping with security and only provides the required information for the user, we also created interfaces that provides Layouts for Web and Mobile clients, the UILayoutManager has the task for providing the correct content, layout details are encoded via JSON.

The Controller layer is where the business logic takes place. As seen, our system's component diagram has two repositories: one for the Hub and one for the Server. On the hub repository we will keep track of the sockets connected to the hub and the divisions of the place. This divisions are used to monitor the consumption by division, to show more detailed info to the user. All the energy readings of each socket will be kept on this repository, so the hub can compute statistics, which will be also kept on this repository. Some configurations related to the hub and sockets will be kept here also.

All the statistics are computed by the StatisticManager using the Hub repository to obtain the energy readings and to store the computed statistics.

The Management component is responsible for managing all the system, as the name suggests. It will manage all the data related with the configuration of the system and the configurable and optional aspects of the system.

All the sockets' management, like which sockets are available, adding new socket, all the room/divisions management and other properties related with sockets, are responsibility of the SocketManager, which also includes sockets energy readings related information.

The AIEngineManager is responsible for managing which sockets are used or not and is responsible for updating and show statistic information to the user, like providing a tailored contract that best suits the household consumption needs.

All the contracts are managed by the ContractManager, that has the power , for example, to add contracts to the application and set the current contract.

The SecurityManager is also part of the system and takes care of the sessions and accounts of the users of the system, preventing lost or steal of data, and keeping the system secure.

And bottom most is the Model layer, where we have two repositories, a local repository of the hub and a remote repository of SHESM server, both store relative system data, the remote server keeps persistence, deals with user accounts and authentication, username, password tokens and hashes, etc, also is where the contracts provided by electricity suppliers are stored, although this repository takes more time to system to communicate with, it will not be used as many times as the hub one, so the time of execution will not be so affected. The hub repository was separated from the Server's repository so that this data is accessed faster and with lower latency.

6.1.4 Physical View

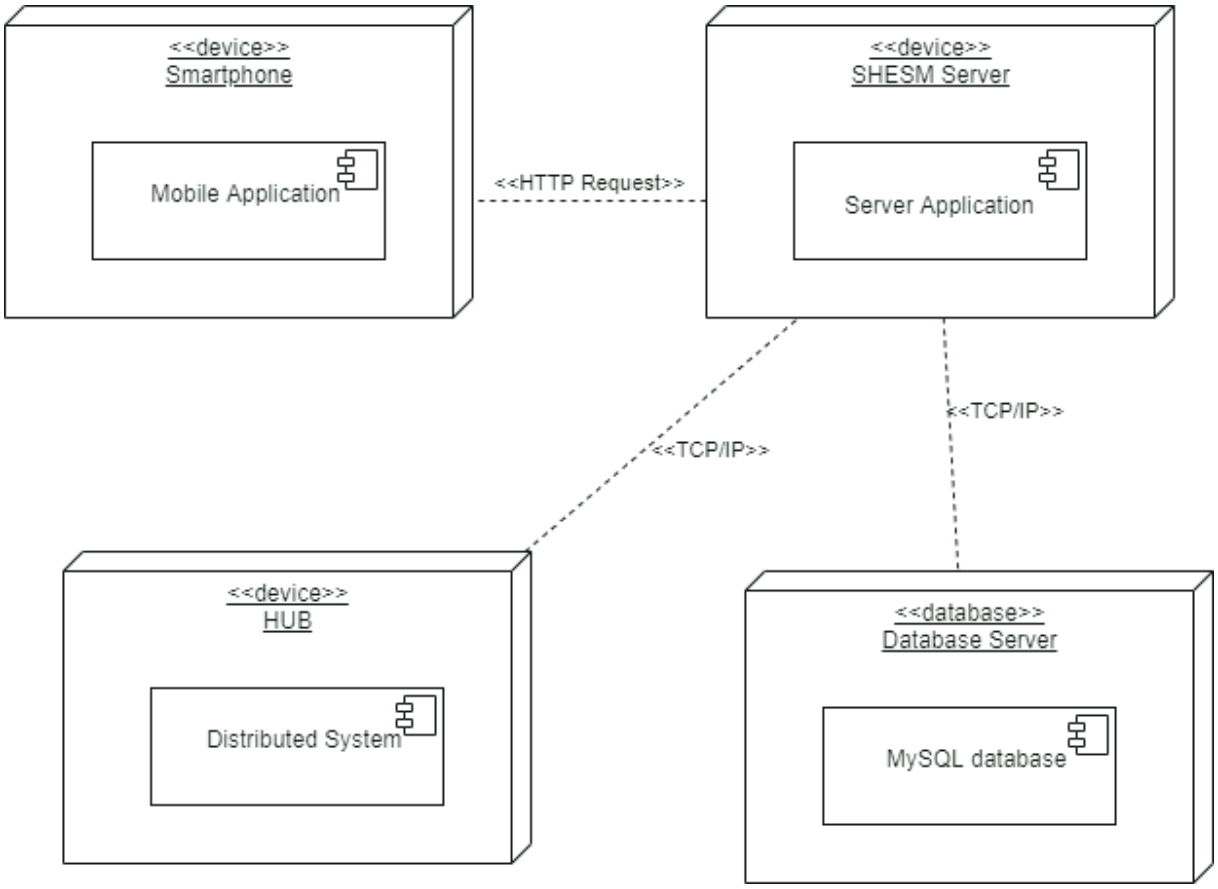

Figure 18: Physical View

The physical view portrays the system from the perspective of a system engineer. It is concerned with the physical layer structure of software components as well as the physical connections between these components. This view is sometimes referred to as the deployment view. The deployment diagram is one of the UML diagrams used to depict the physical perspective. The client-side of the system will run in the clients' smartphone and will communicate with server-side and in its turn will have a direct encrypted connection to clients HUB and database. The system is designed this way to exclude human factors or virus presence on user smartphone to protect user sensible data.

6.1.5 Process View

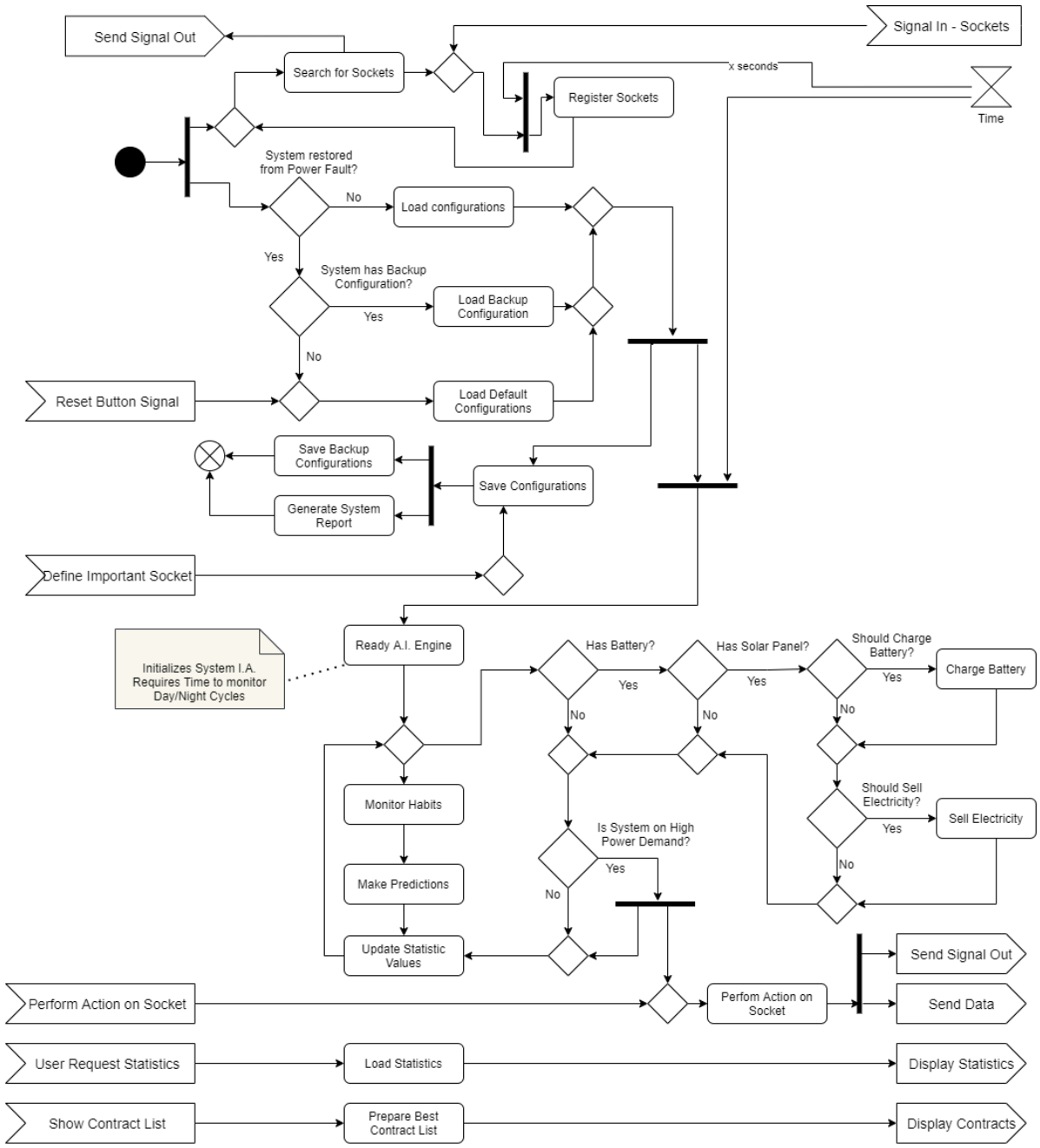

Figure 19: SHESM - UML Activity Diagram

The process view focuses on the system's run-time behavior and deals with the system's dynamic elements, and describes the system processes and how they communicate, we used an UML Activity Diagram to represent the behavior of the system under normal conditions. We focus on 2 main big regions on the diagram that shows, first the Hub internal processing with socket setup process, and the second region displays AI integration and user interaction with our system through signal processing.

6.2 Sense-Compute-Control

6.2.1 Smart Socket

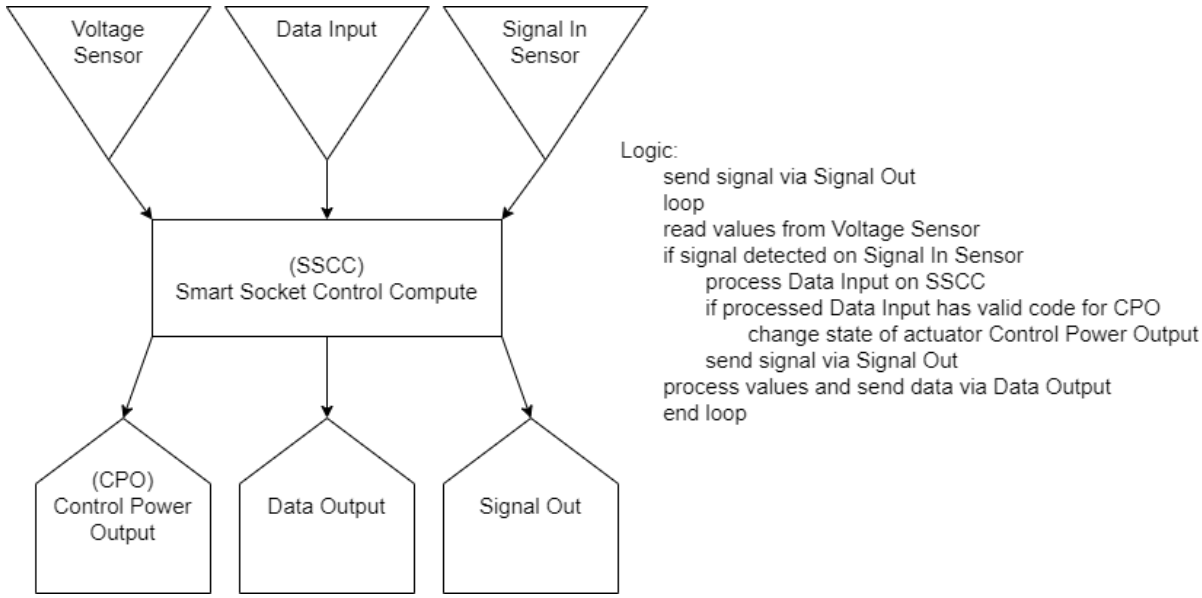

Figure 20: Smart Socket Sense-Compute-Control LL

The Voltage Sensor will be processed by the Smart Socket Control Compute providing the power data required to send the info back to the Hub via Data Output, Signal In and Signal Out are low power activity checks, can verify socket status or prepare for data reception or emission, e.g. sending a signal to Hub after being plugged or installed in a wall, alerting the Hub to prepare for an automatic socket configuration, new information such as an ID or encrypted security code can be provided via Data Input.

Also on request by the Hub, and via Data input, the actuator Control Power Output can be triggered to allow or deny electricity to plugged devices. There is also a signal emission by actuator Signal Out that is outside of loop, this happens because of the need to alert Hub, when a new Socket was detected, or in case of power cut, when socket powered back or re-plugged to inform the Hub it is functional again.

Signal In and Signal Out are of significant importance as they provide lower power consumption, only processing Data In when a signal in is detected on the sensor, however Voltage Data always being transmitted by Data Output in a Real-Time scope.

There was planning for extendable functions the socket could perform, this feature was removed as it would hurt the simplicity wanted for sockets, the sockets objective is simply to monitor voltage and turn off power output.

6.2.2 Hub

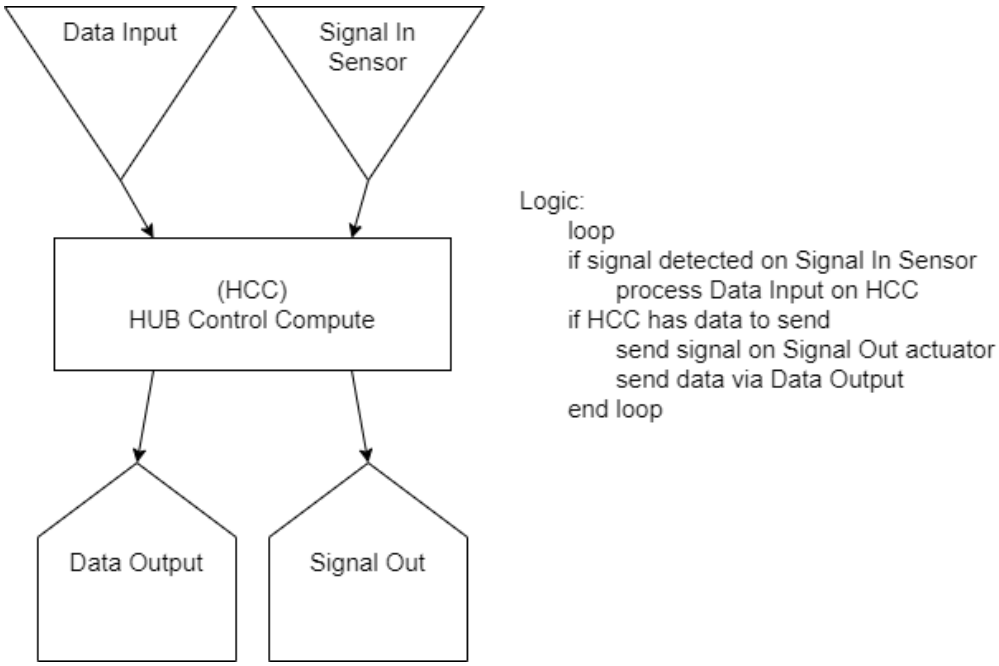

Figure 21: HUB Sense-Compute-Control LL

The data processed by Hub requires signals and data transmission via powerline, so Voltage needs to be modulated and processed as if flows within the AC current, when a Signal is detected by Signal In Sensor, it contains information from the socket that transmitted, e.g. an unique socket id, to inform the Hub about an active Socket and its identification, data inputs will then receive the information to be processed, the actuators will send information only when an action over a socket is requested by Hub (implies the Hub AI or via API by an user or remote system with permission to do so), thus sending a signal and the data containing a code of an action to be done on a socket. The Factory Reset Button and Ethernet or Wifi features aren't considered Sensors nor Actuators, we consider only sensors and actuators that featured real-time processes in the powerline, the Hub doesn't send or spread Ethernet signals nor provide Internet capabilities to the sockets.

7 Conclusions

So, we end this learning path that resulted in this report and in the design of an application that we know will bring benefits to its users and that can help people in general to save money.

Along this path, we gradually defined and characterized our system until finally it is defined. To achieve this characterization it took a lot of models and hours of work that culminated in this system of which we are proud. We end this process with the certainty that the system we have planned and designed will benefit the world.

We felt that this work was a huge help for the preparation of the tests and also for us to understand a little better the software creation process, what its steps are and what mechanisms exist for this creation and definition.

It is sad that this project did not get off the paper, because the human, economic and environmental benefit of this project, if implemented, would have an interesting dimension, we believe. It would let people make a better management of the natural resources resulting in less energy produced via non natural methods which would benefit the ambient a lot.

8 Acknowledgements

To all teams that participated in the brainstorming sessions, which contributed with invaluable ideias that supported this document.
To EDP for the availability, providing some general insights about projects they have such as smart grids and the storage intelligent management platform.
To all participants of the Questionnaire that toke their time in answering, helping us to refine the requirements for this document and reaching better conclusions.
To our teacher Ana Moreira for the support, effort and commitment given to us in gaining the required skills and help building a better requirement document.

9 References

[1] Pannuto, Pat. (2011). Exploring Powerline Networking for the Smart Building.

[2] Storage Intelligent Management Platform. (2021, June 10). Edp.Com.
https://www.edp.com/en/innovation/storage-intelligent-management-platform

[3] Zandi, Helia, Kuruganti, Teja, Vineyard, Edward Allan, Fugate, David. Home Energy Management Systems: An Overview. United States.