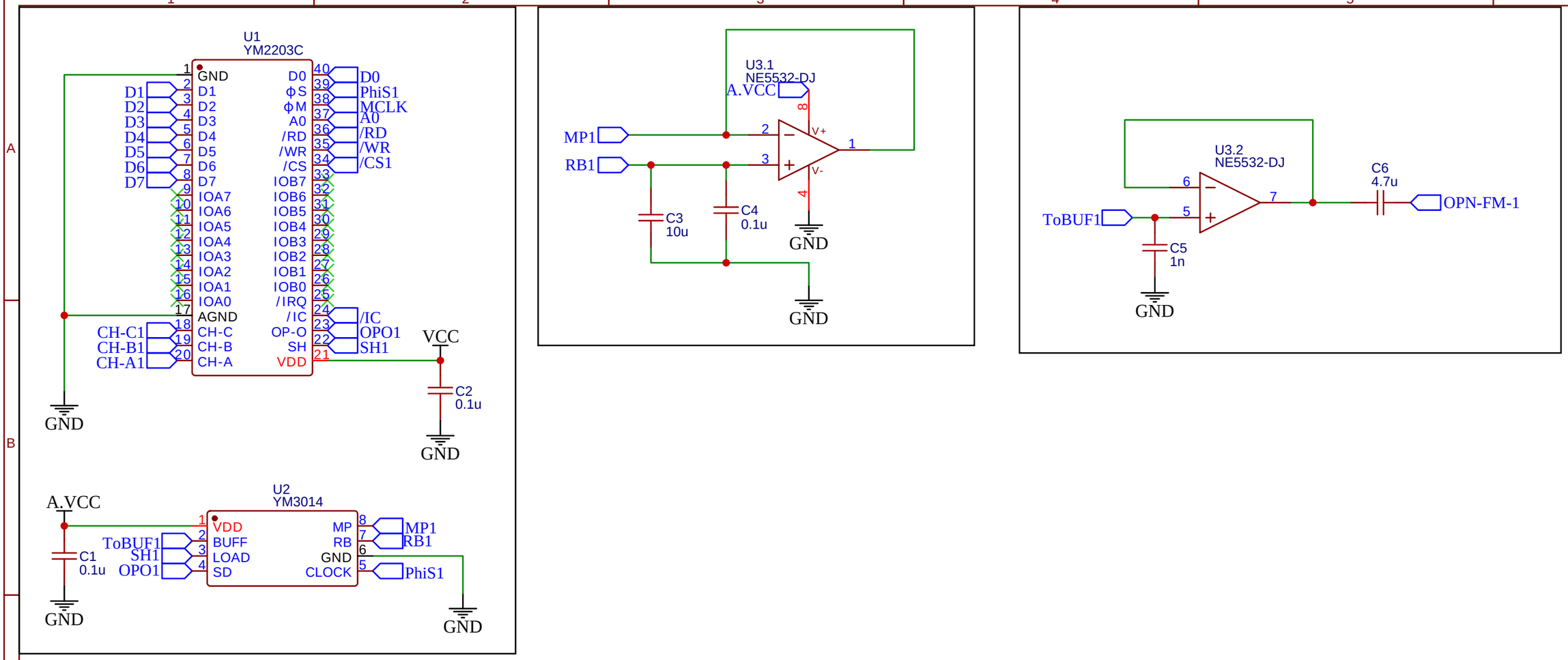

TITLE: Sheet_1		REV: 1.0
立创EDA	Company: Your Company	Sheet: 1/1
	Date: 2021-11-07 Drawn By: Denjhang	

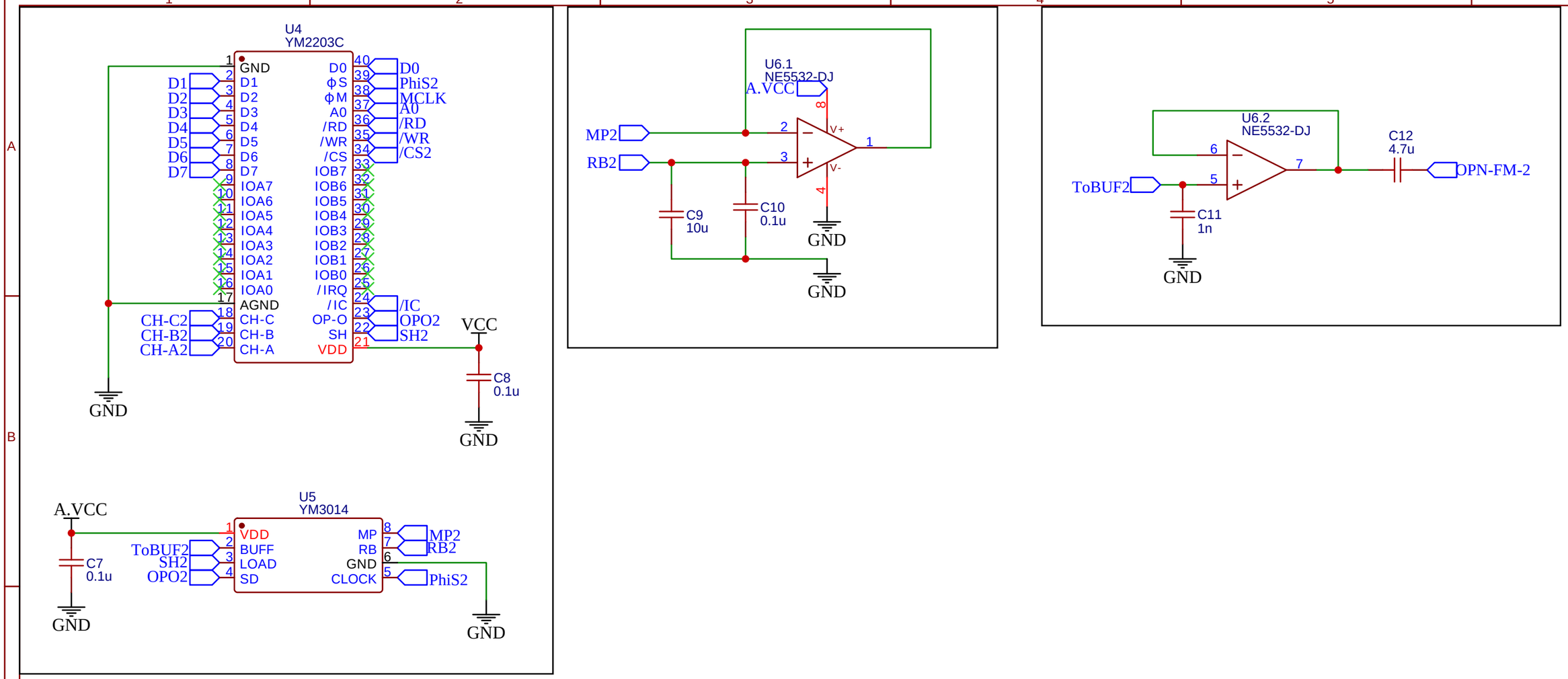

TITLE: Sheet_1		REV: 1.0
嘉立创EDA	Company: Your Company	Sheet: 1/1
	Date: 2023-09-26 Drawn By: Denjhang	

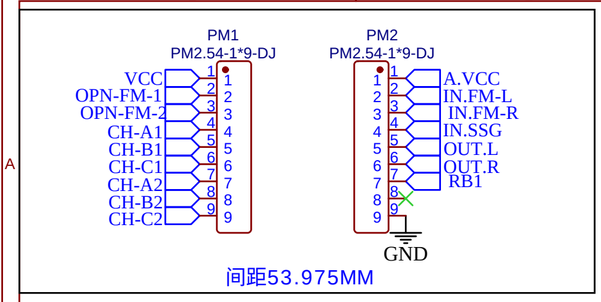

TITLE: Sheet_1		REV: 1.0
立创EDA	Company: Your Company	Sheet: 1/1
	Date: 2021-11-07 Drawn By: Denjhang	

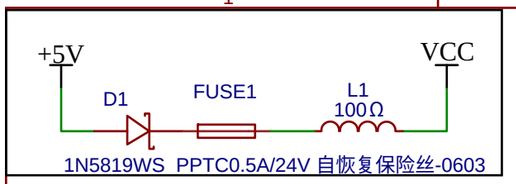

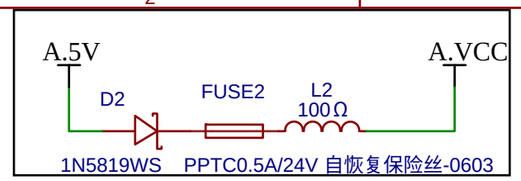

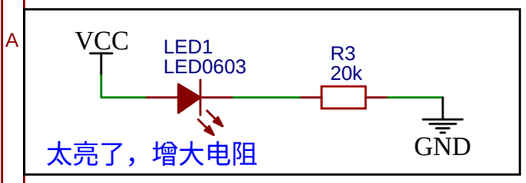

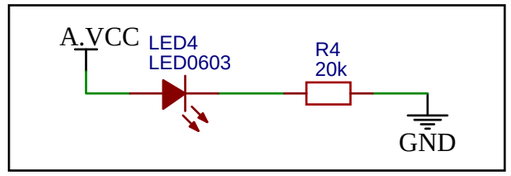

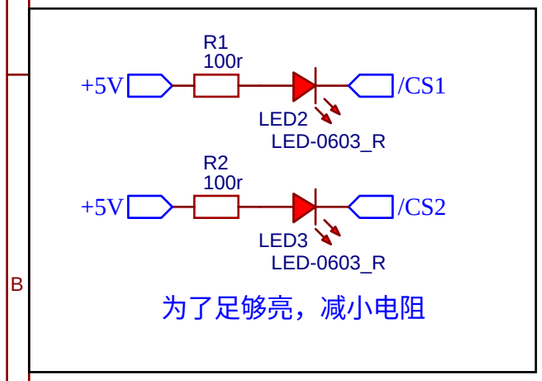

TITLE: Sheet_1		REV: 1.0
嘉立创EDA	Company: Your Company	Sheet: 1/1
	Date: 2023-02-03 Drawn By: Denjhang	

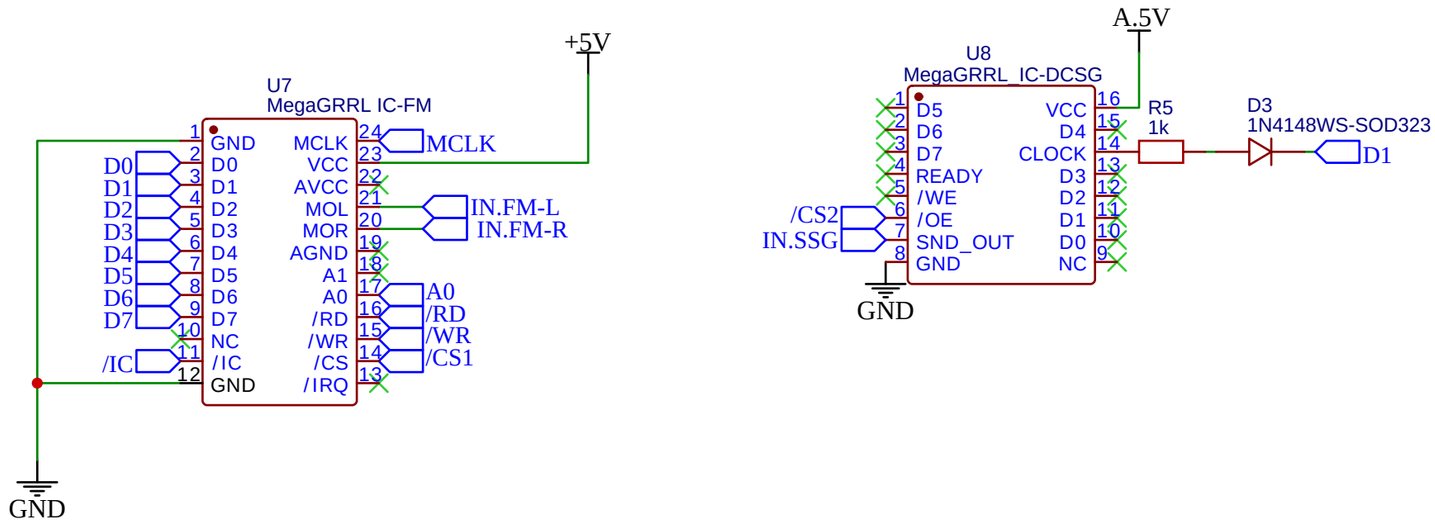

TITLE: Sheet_1		REV: 1.0
嘉立创EDA	Company: Your Company	Sheet: 1/1
	Date: 2023-09-26 Drawn By: Denjhang	

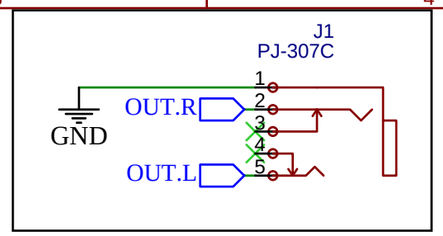

TITLE: Sheet_1		REV: 1.0
嘉立创EDA	Company: Your Company	Sheet: 1/1
	Date: 2023-09-27 Drawn By: Denjhang	