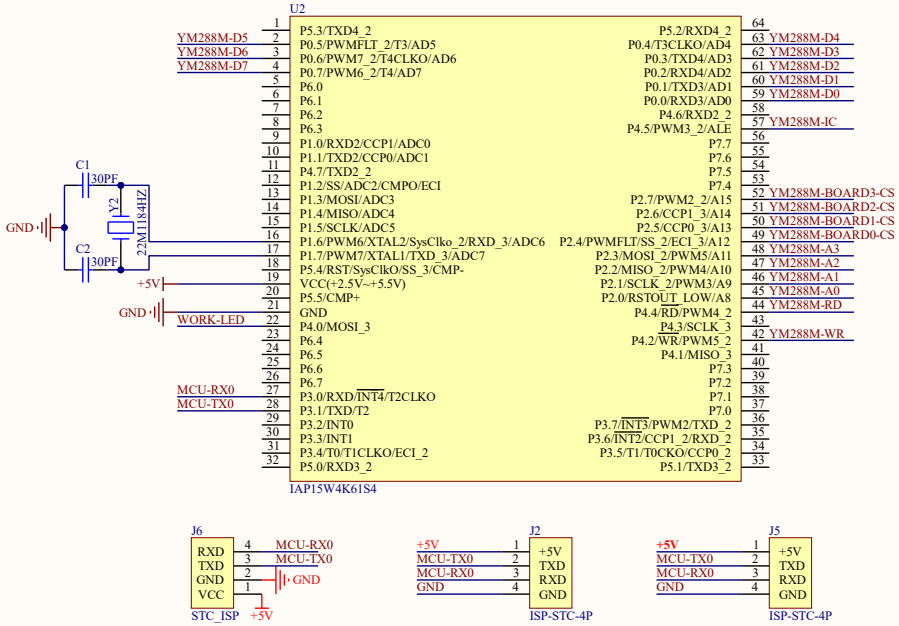

STC15W4K61S4核心

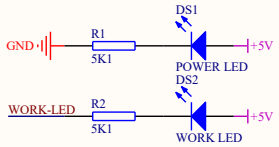

指示灯

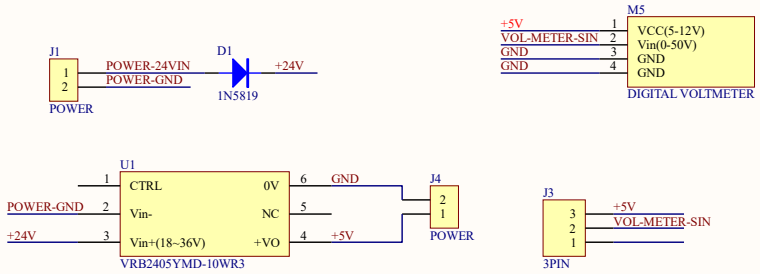

电源输入

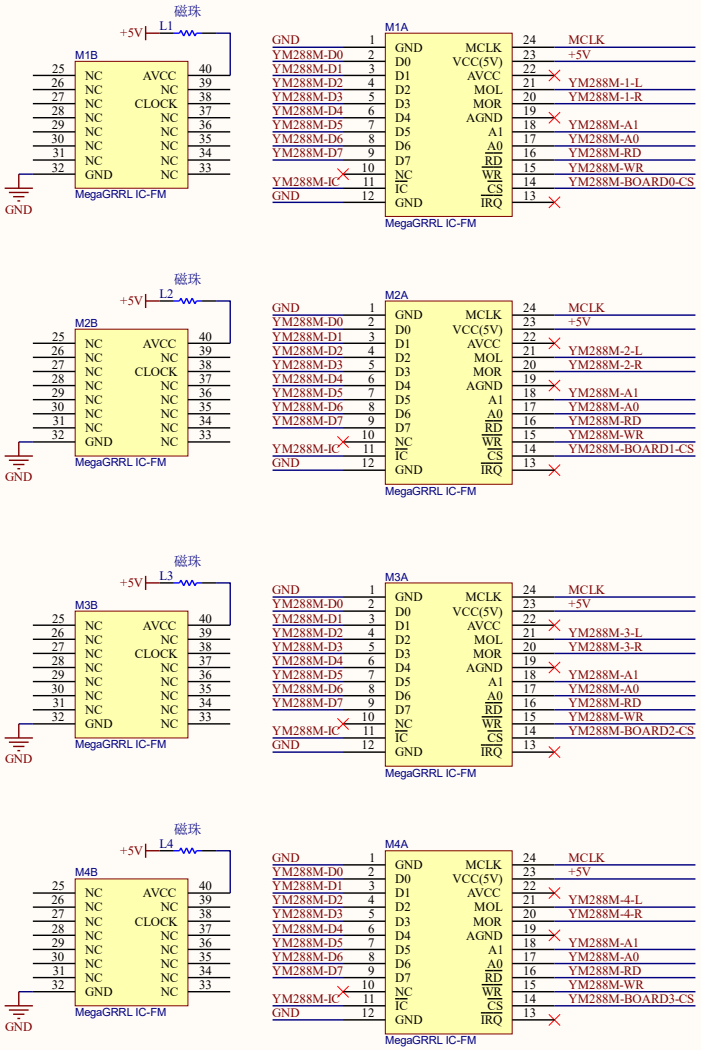

YMF288模块4路

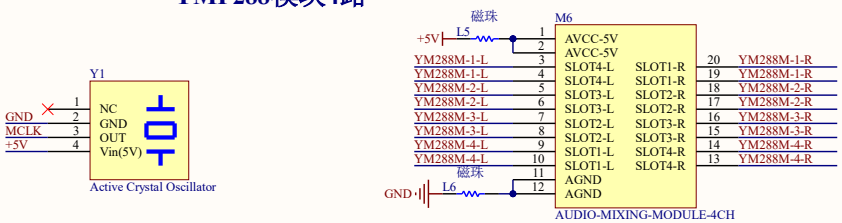

有源晶振模块

Title *			
Size: A3	Number:*	Revision:*	
Date: 2023-12-08	Time: 09:36:56	Sheet * of *	
File: D:\360MoveData\Users\Administrator\Desktop\STC15W4K61S4_YMF288-M底板(SN_231113-01-02 VER_231208C).schdoc			