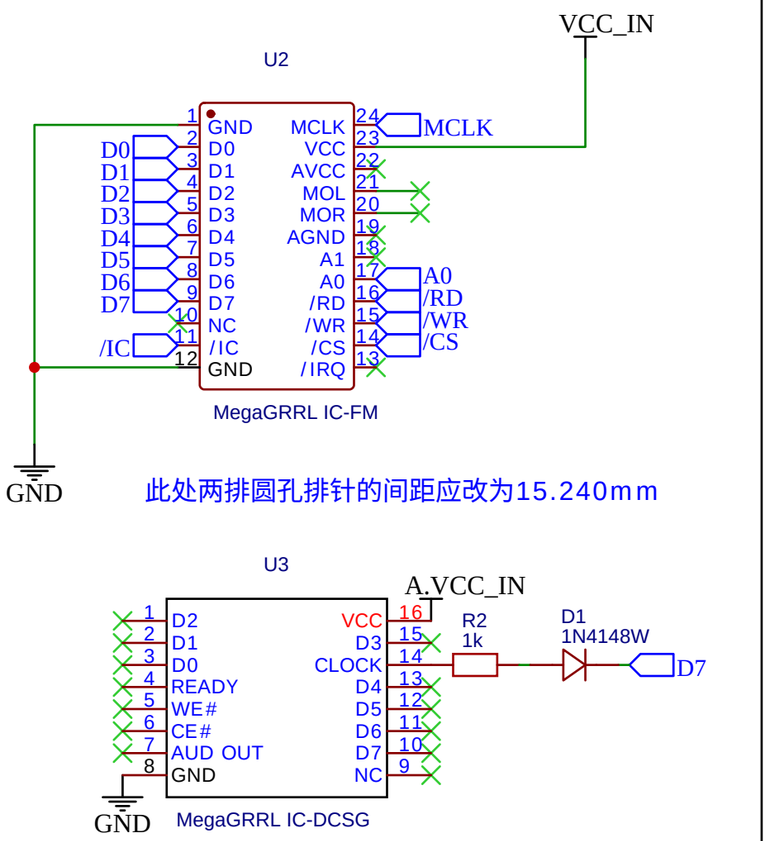

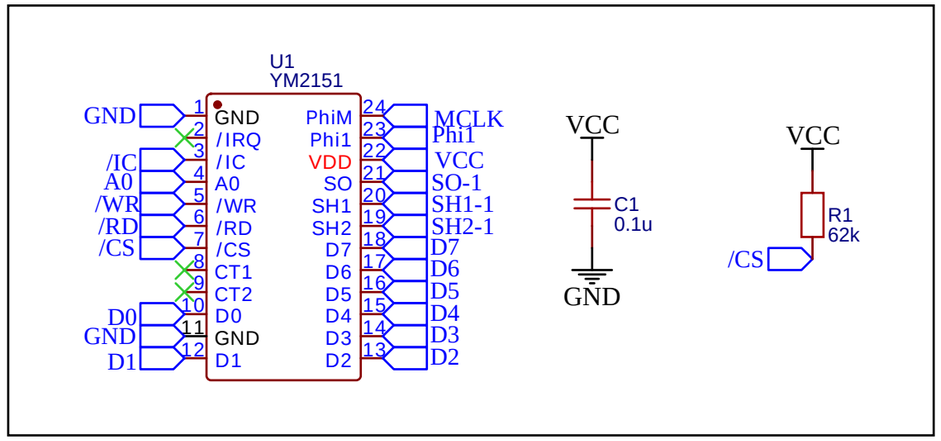

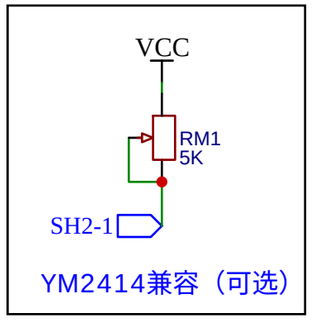

TITLE: Sheet_1		REV: 1.0
立创EDA	Company: Your Company	Sheet: 1/1
	Date: 2021-10-25 Drawn By: Denjhang	

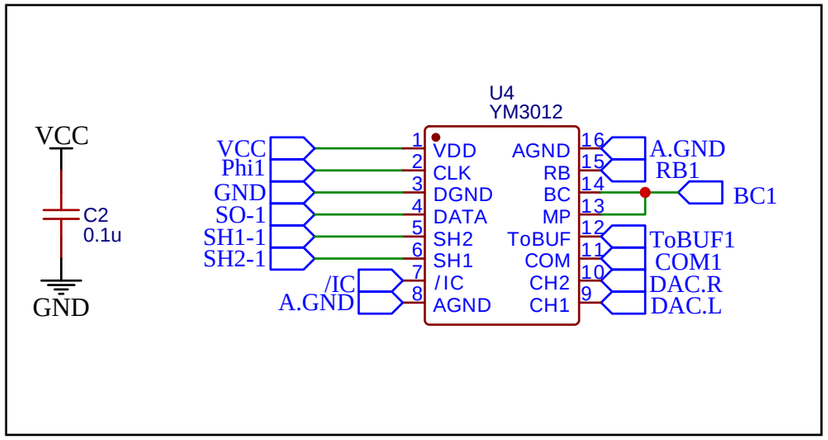

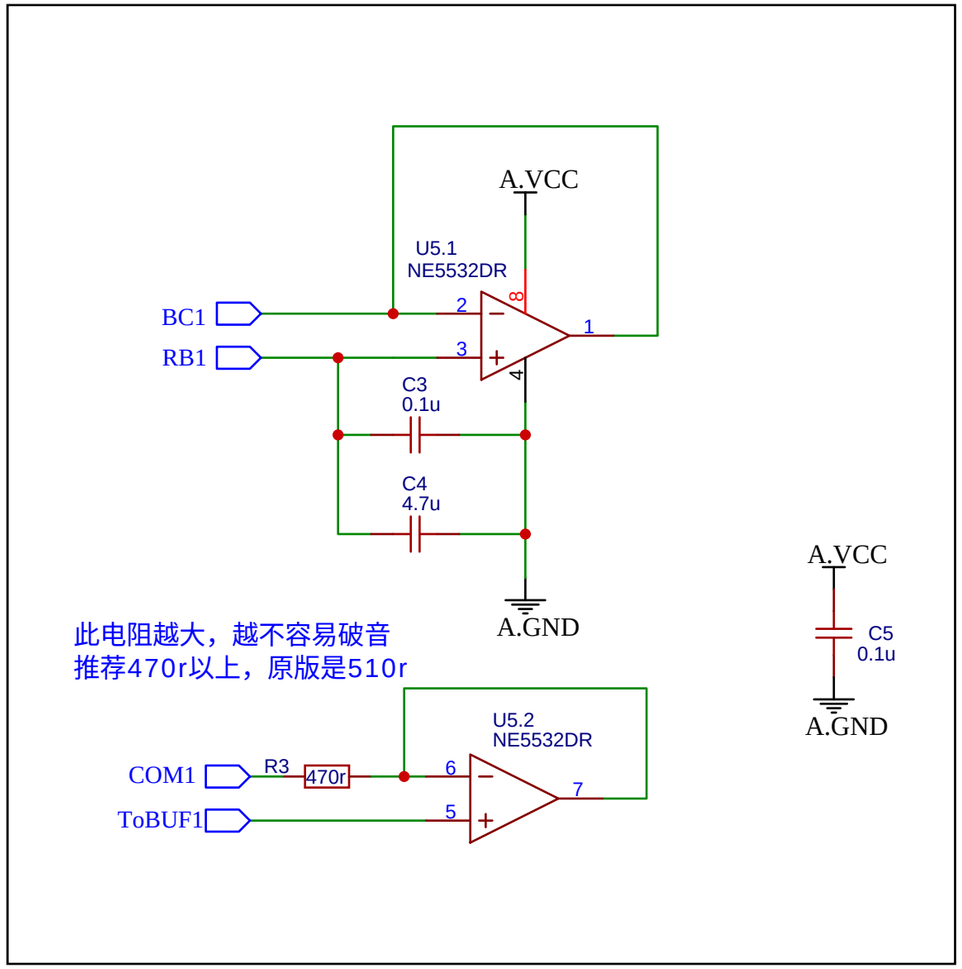

TITLE: Sheet_1		REV: 1.0
立创EDA	Company: Your Company	Sheet: 1/1
	Date: 2021-10-26 Drawn By: Denjhang	

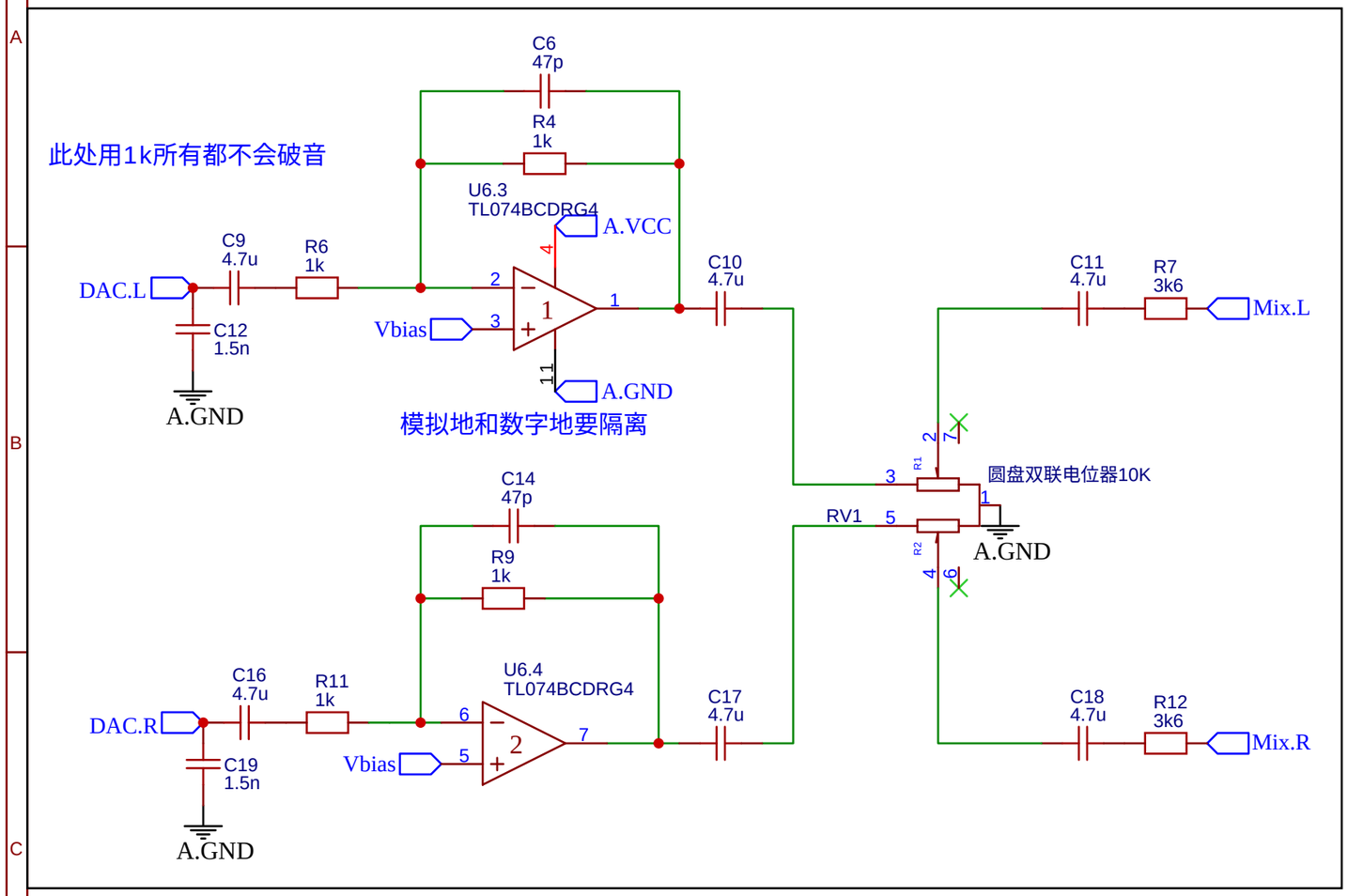

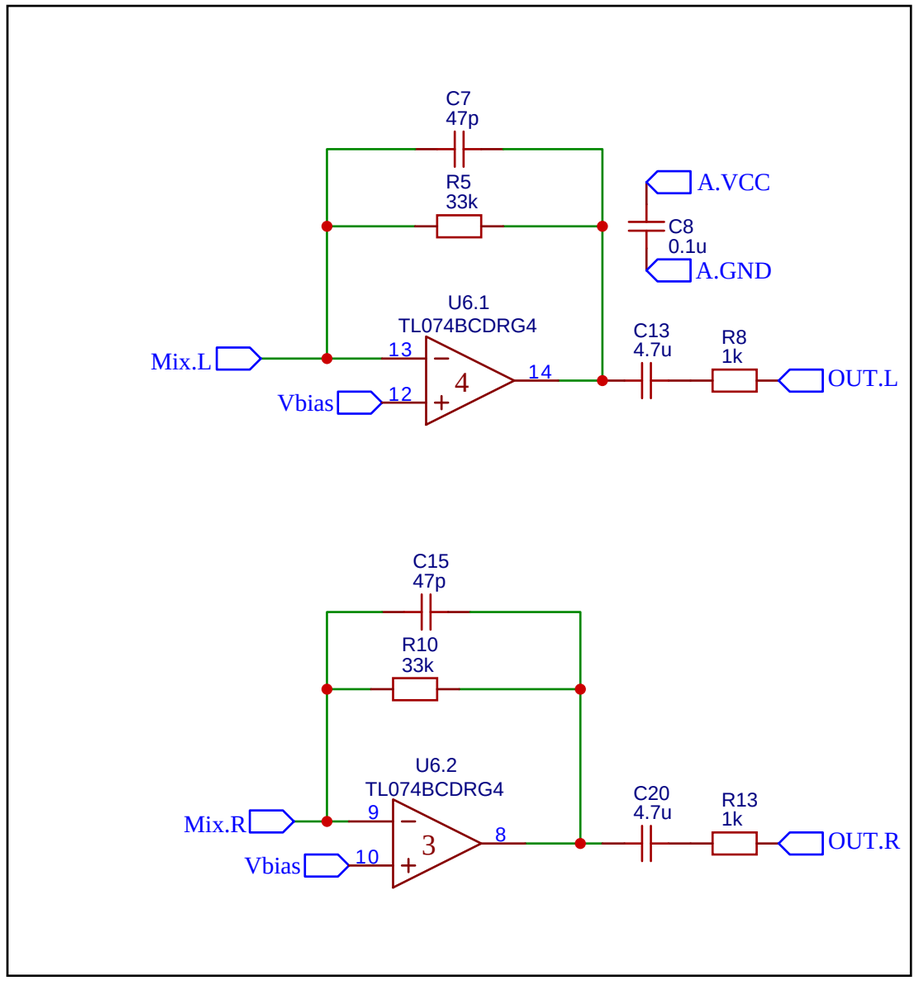

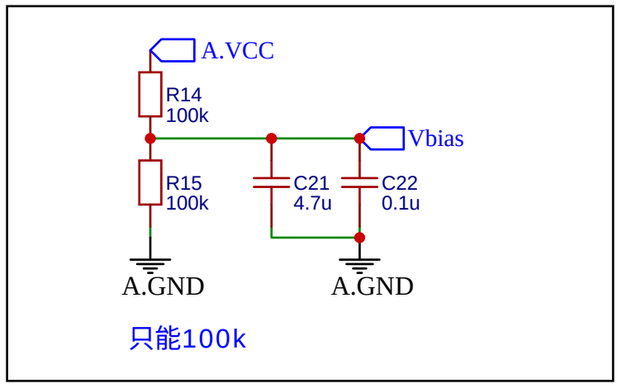

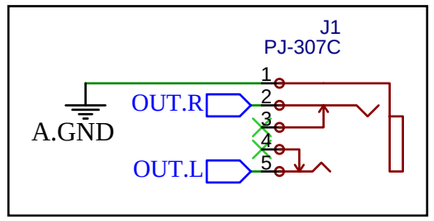

TITLE: Sheet_1		REV: 1.0
立创EDA	Company: Your Company	Sheet: 1/1
	Date: 2021-10-26 Drawn By: Denjhang	

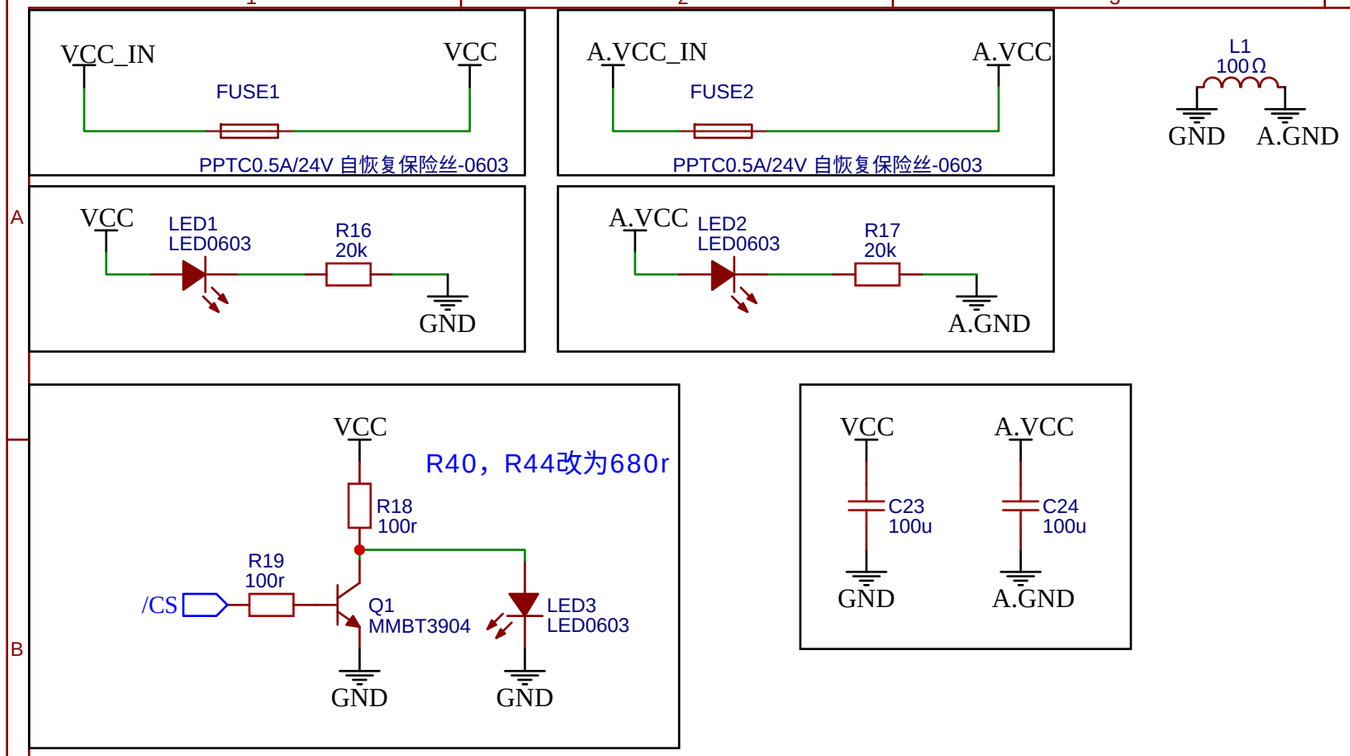

TITLE: Sheet_1		REV: 1.0
嘉立创EDA	Company: Your Company	Sheet: 1/1
	Date: 2023-09-25 Drawn By: Denjhang	