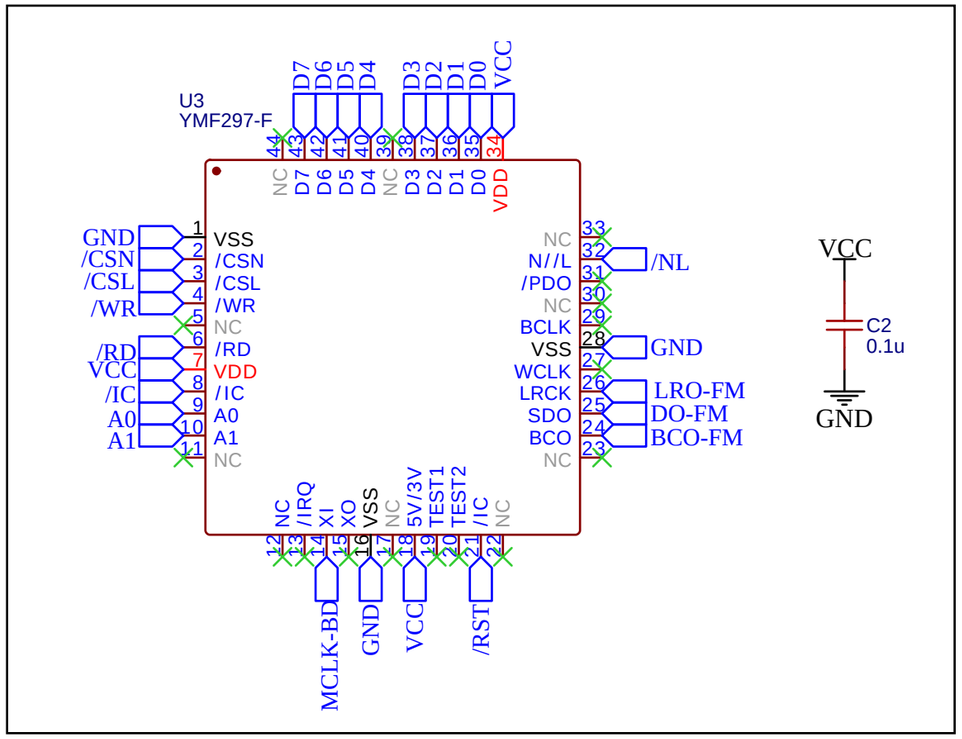

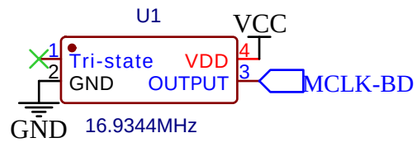

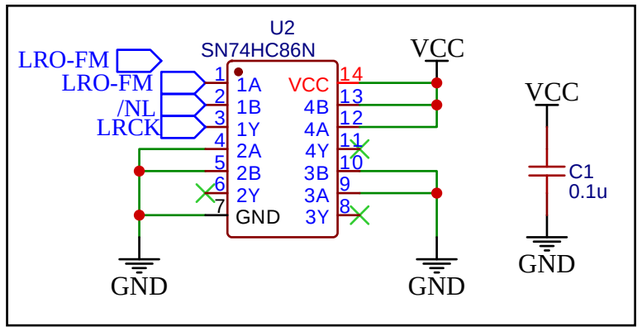

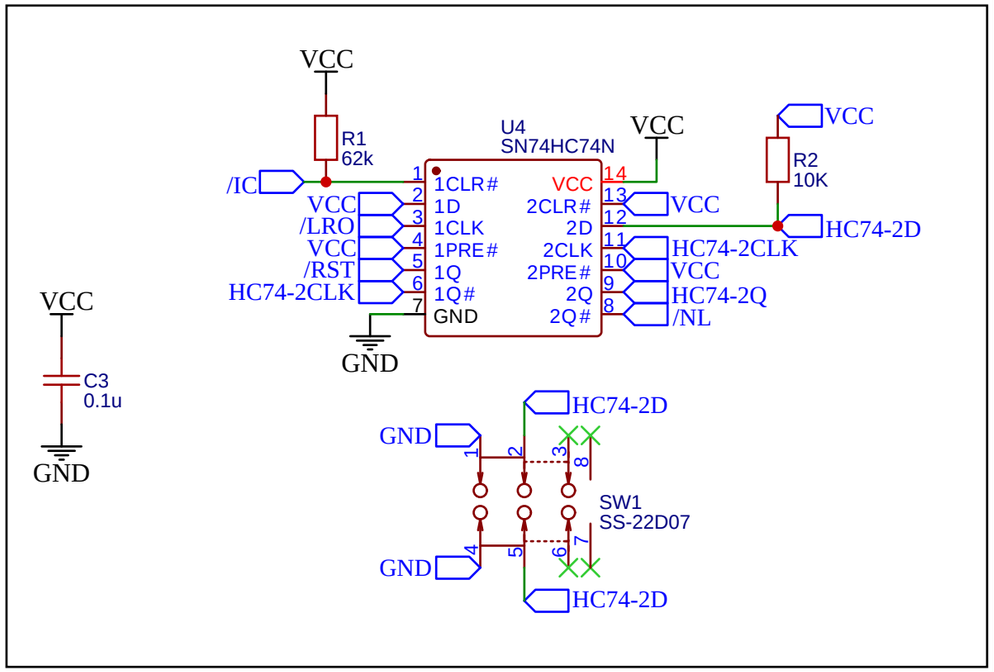

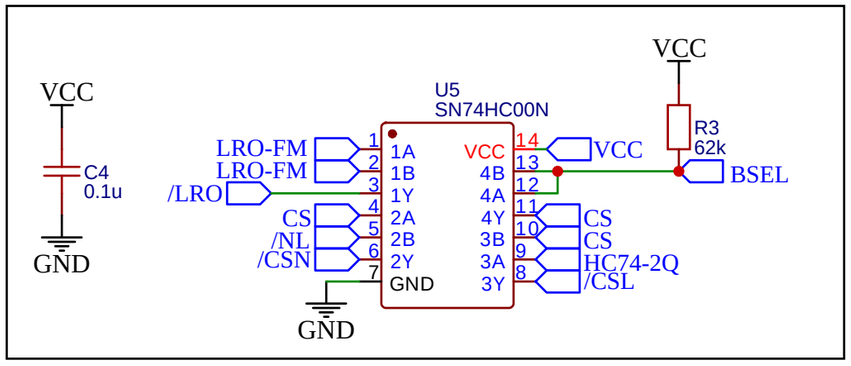

2024.1.31
1.使用完全的原始设计，不要使用BU9480

TITLE: Sheet_1		REV: 1.0
嘉立创EDA	Company: Your Company	Sheet: 1/1
	Date: 2024-01-04 Drawn By: Denjhang	

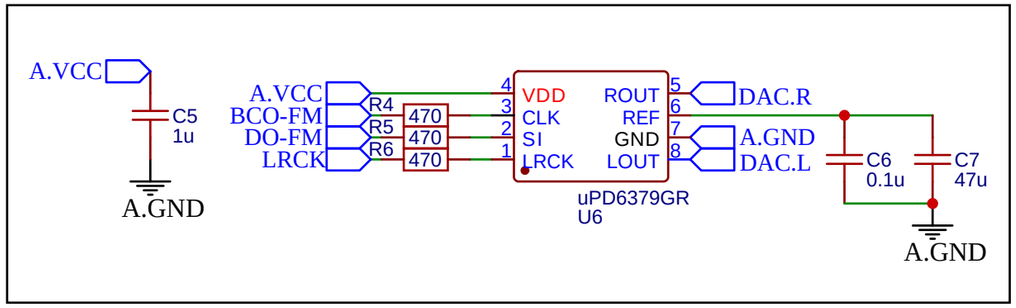

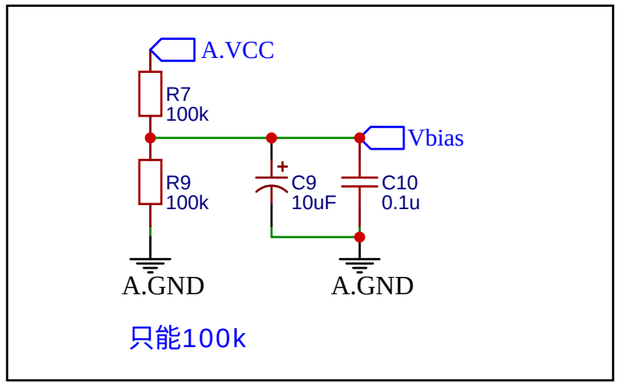

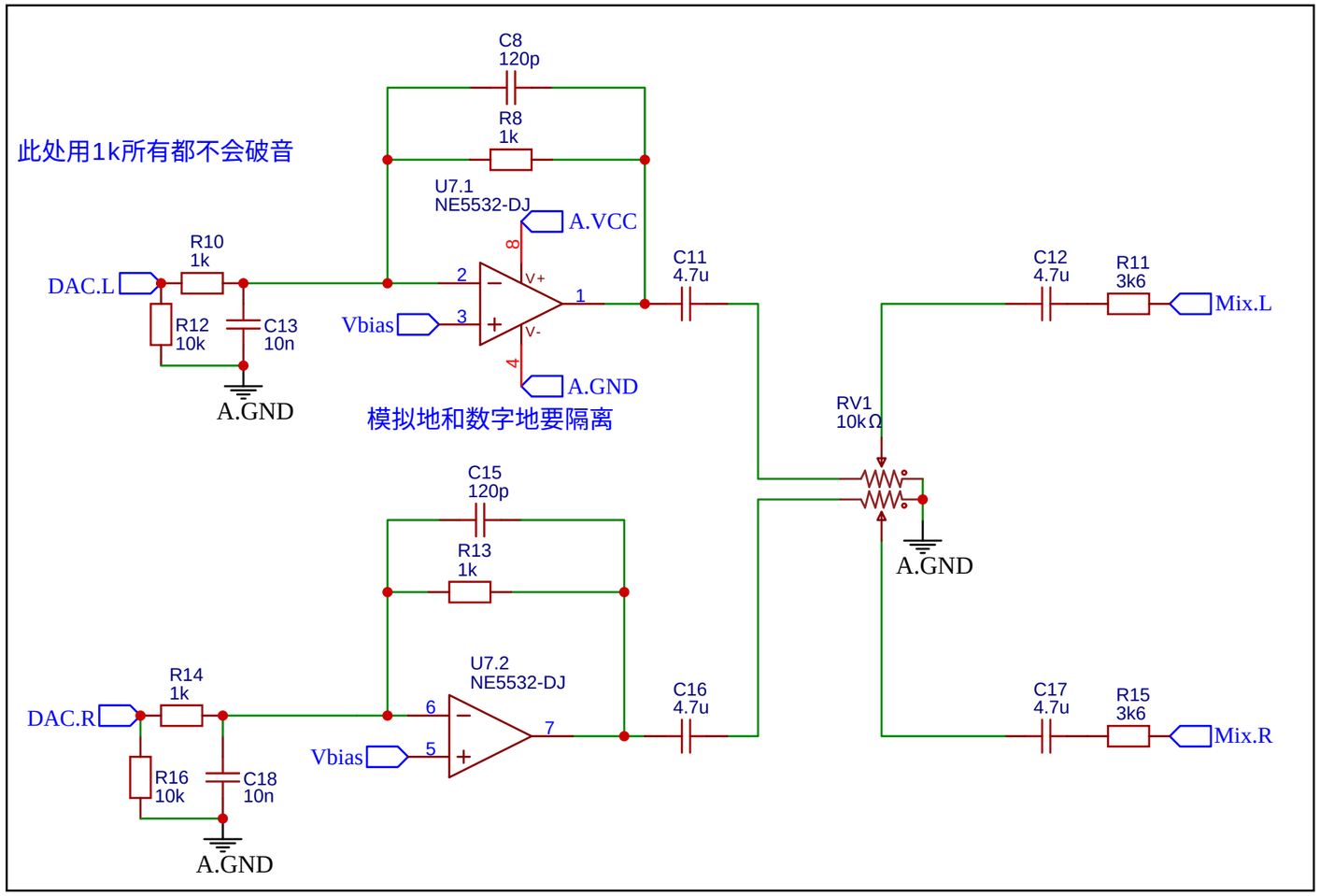

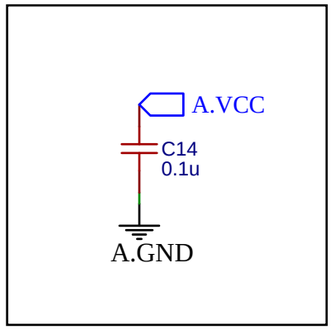

TITLE: Sheet_2		REV: 1.0
嘉立创EDA	Company: Your Company	Sheet: 1/1
	Date: 2024-01-12 Drawn By: Denjhang	

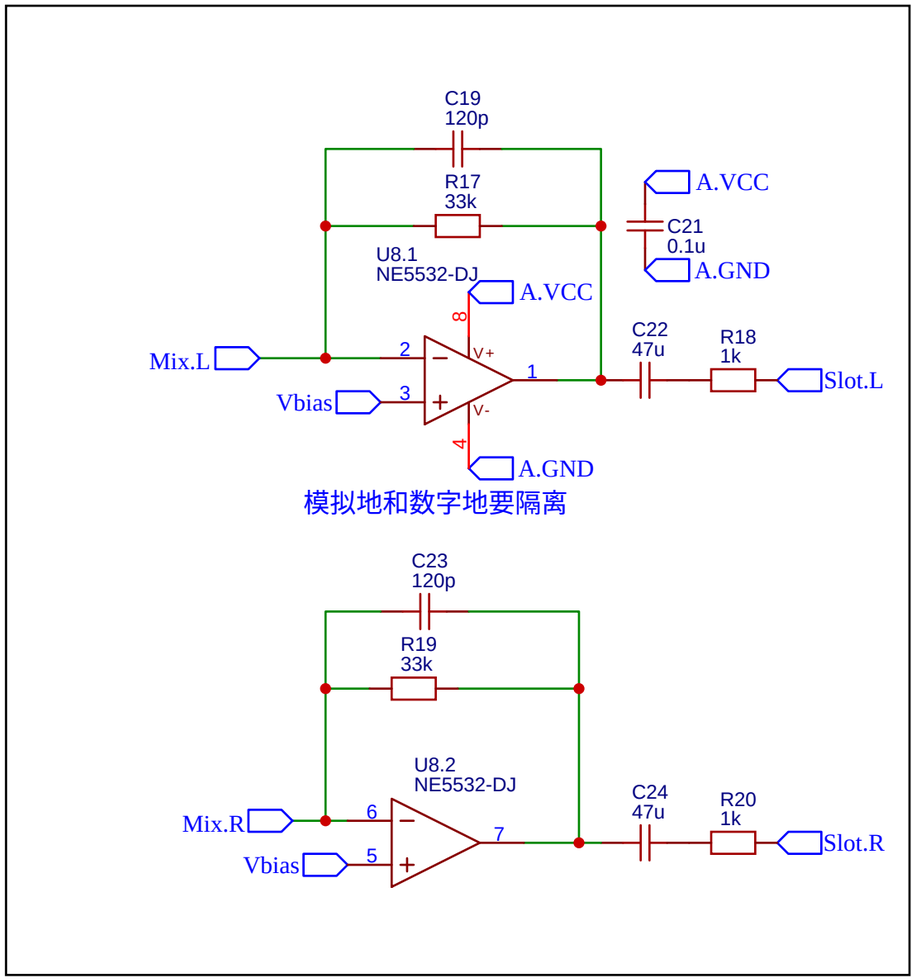

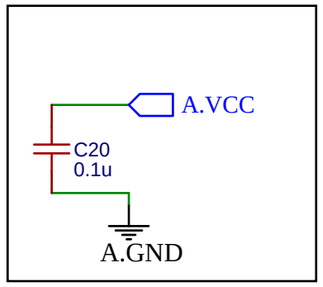

TITLE: Sheet_4		REV: 1.0
嘉立创EDA	Company: Your Company	Sheet: 1/1
	Date: 2024-01-12 Drawn By: Denjhang	

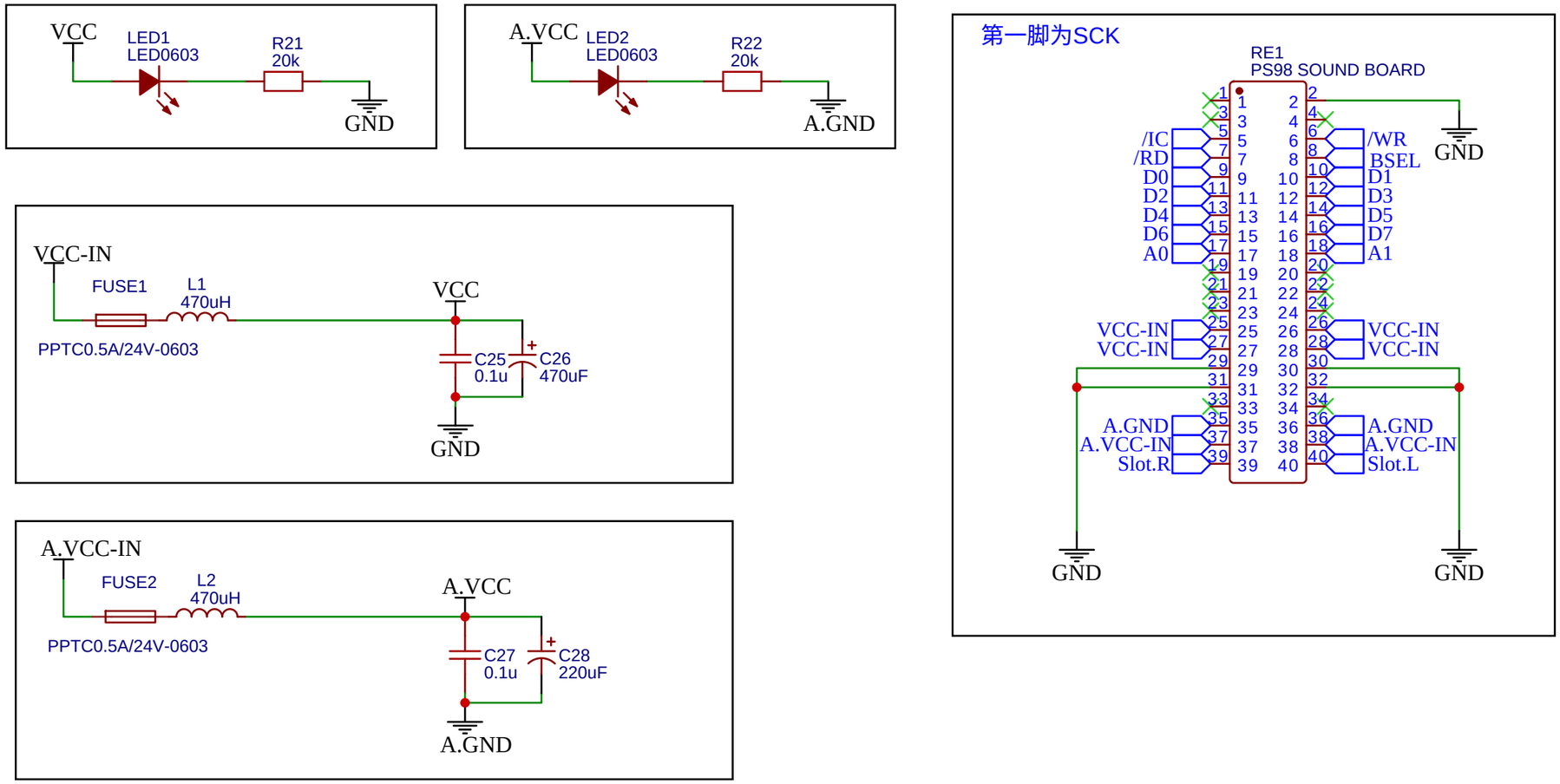

TITLE: Sheet_3		REV: 1.0
嘉立创EDA	Company: Your Company	Sheet: 1/1
	Date: 2024-01-12 Drawn By: Denjhang	