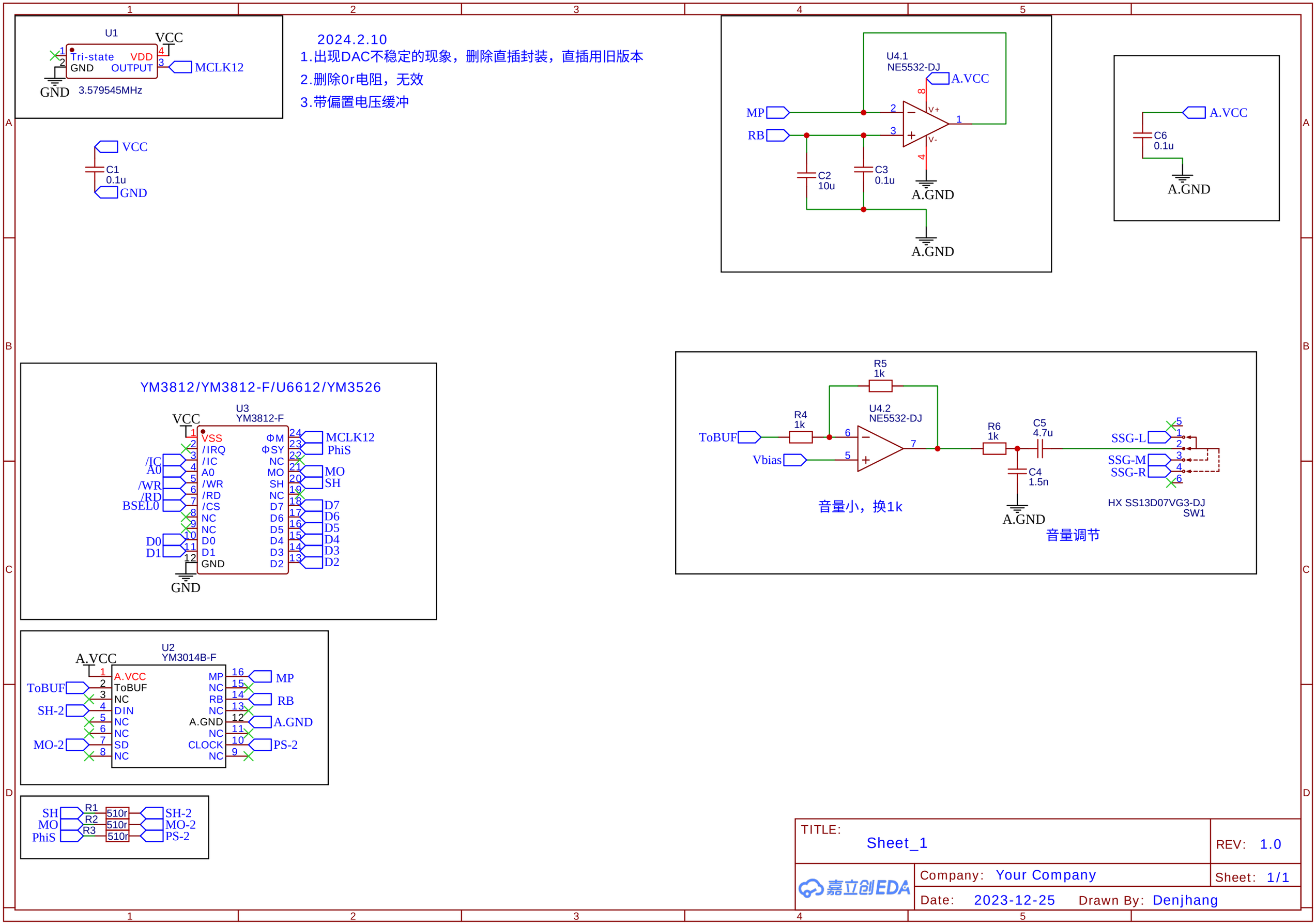

TITLE: Sheet_1	REV: 1.0
嘉立创EDA Company: Your Company	Sheet: 1/1
Date: 2023-12-25 Drawn By: Denjhang	

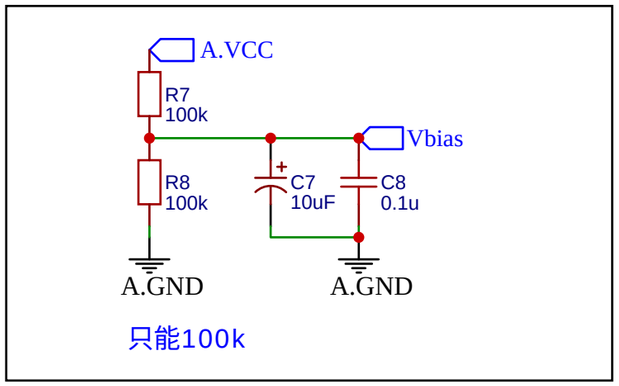

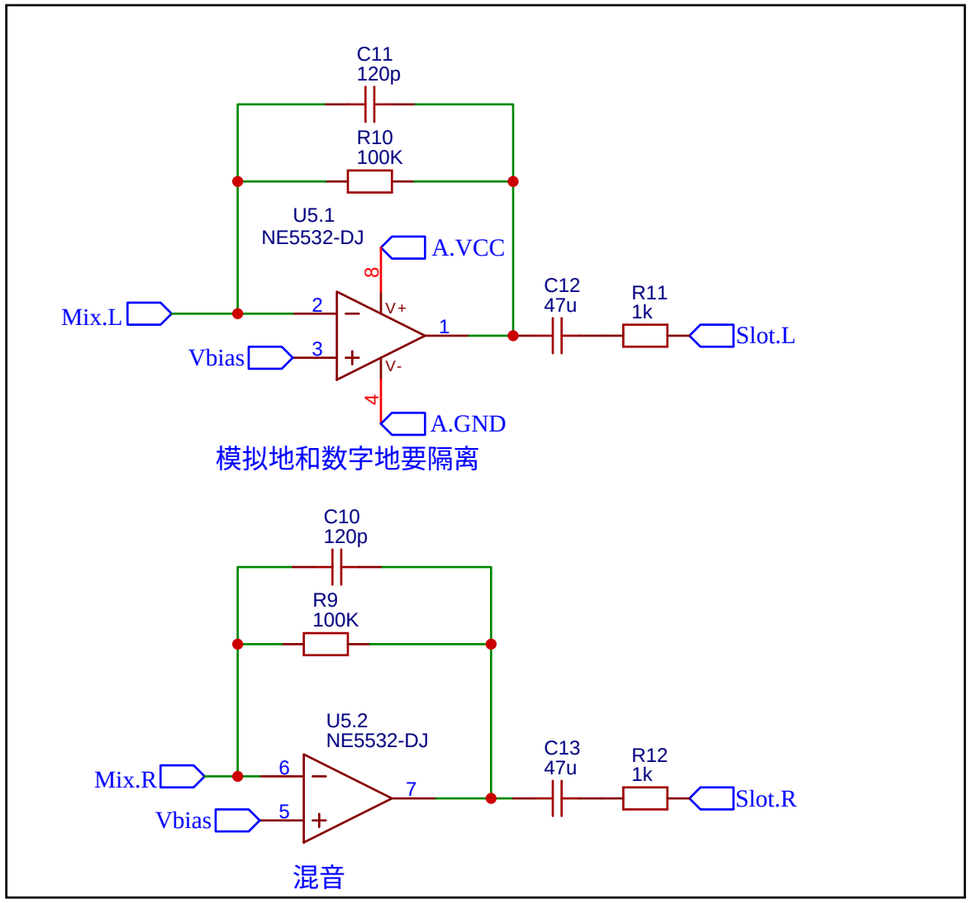

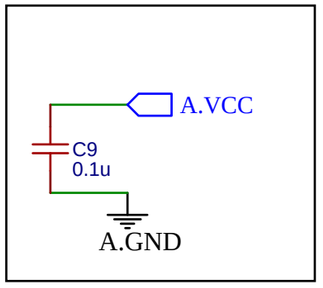

TITLE: Sheet_1		REV: 1.0
嘉立创EDA	Company: Your Company	Sheet: 1/1
	Date: 2024-01-02 Drawn By: Denjhang	

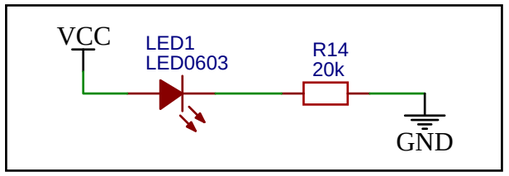

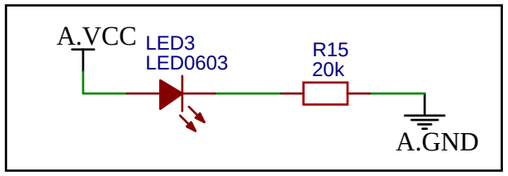

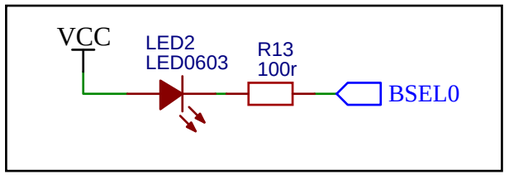

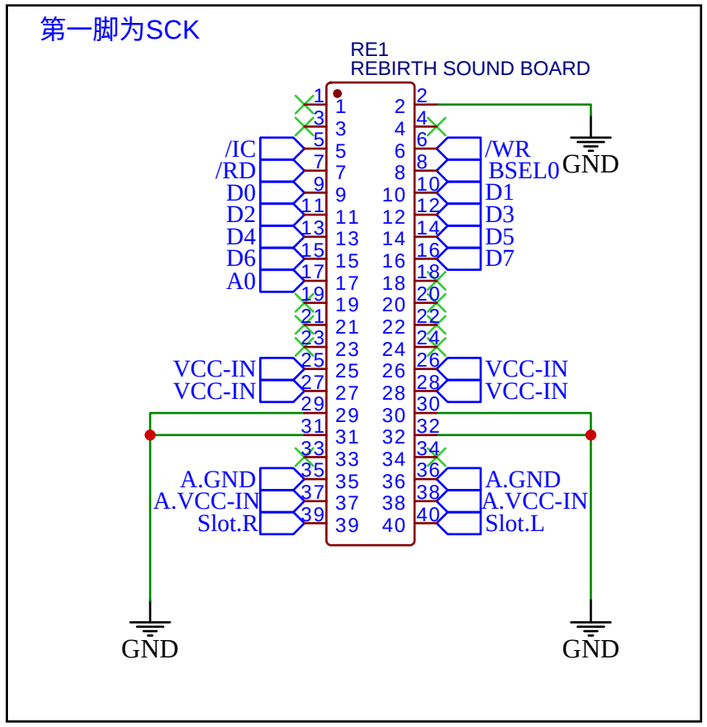

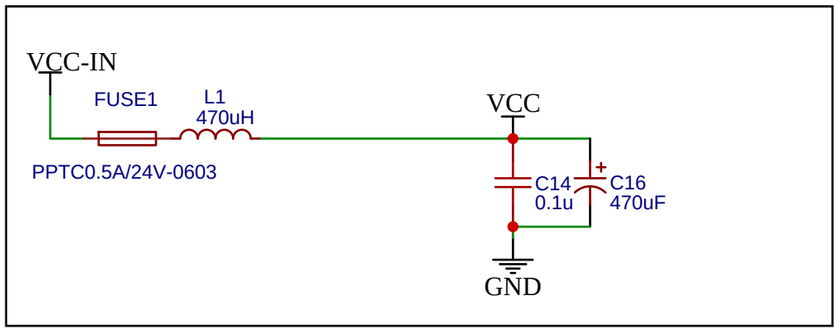

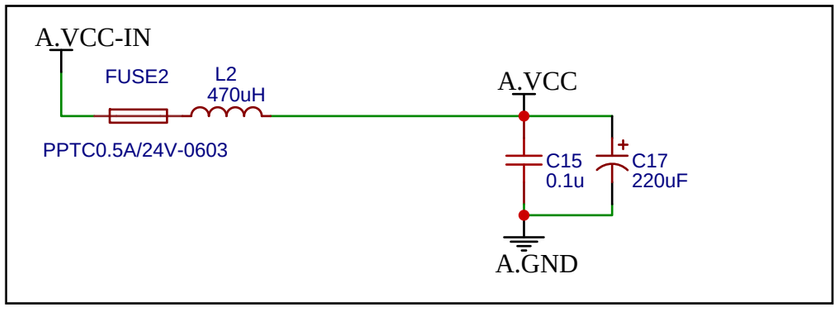

TITLE: Sheet_1		REV: 1.0
嘉立创EDA	Company: Your Company	Sheet: 1/1
	Date: 2024-01-25 Drawn By: Denjhang	

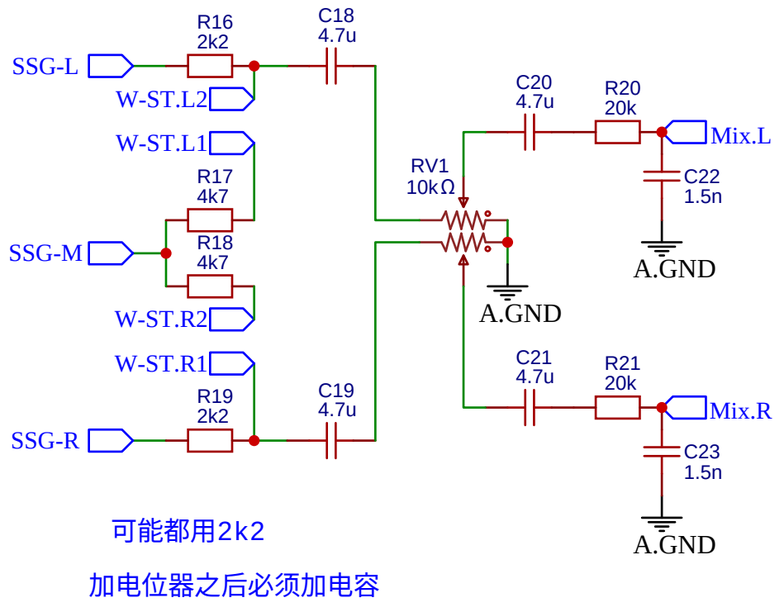

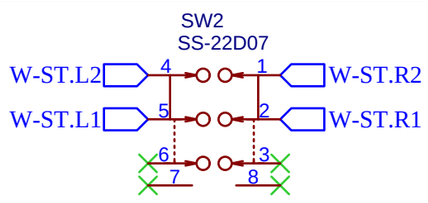

宽立体声开关

TITLE: Sheet_1		REV: 1.0
嘉立创EDA	Company: Your Company	Sheet: 1/1
	Date: 2024-01-25 Drawn By: Denjhang	