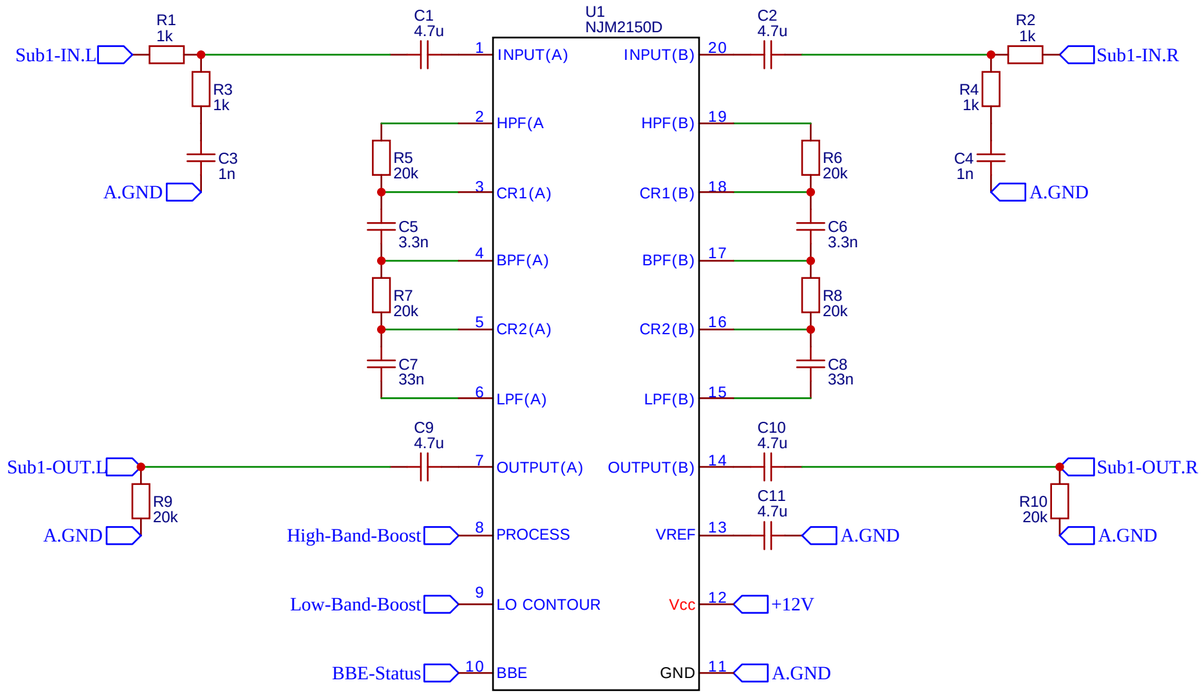

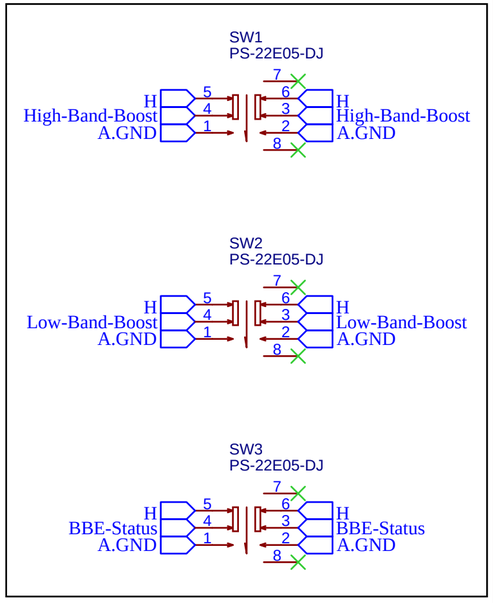

SRTCPA = Stereo Reverb + Tone Control + BBE + Pre-amp

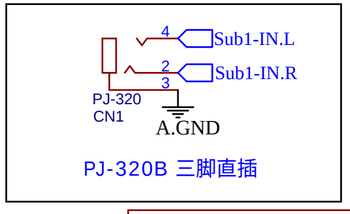

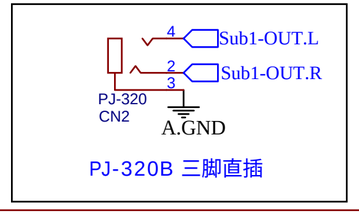

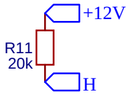

TITLE: Sheet_2	REV: 1.0
嘉立创EDA Company: Your Company	Sheet: 1/1
Date: 2024-08-30 Drawn By: Denjhang	

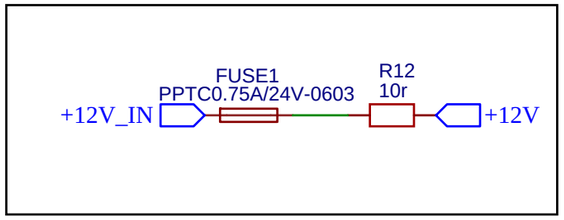

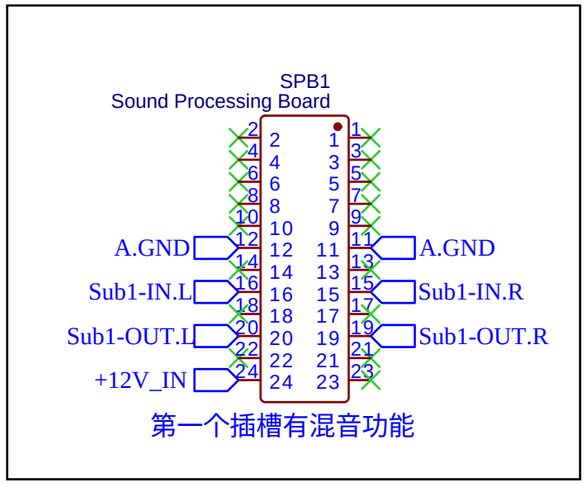

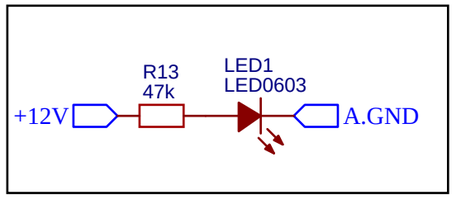

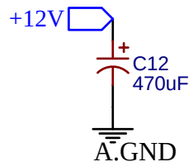

TITLE: Sheet_1		REV: 1.0
嘉立创EDA	Company: Your Company	Sheet: 1/1
	Date: 2024-08-30 Drawn By: Denjhang	