# WORKSHOP WORKBENCH

## Version 2 — Construction Set

| | |
|---|---|
| **Overall length:** | 2700 mm |
| **Overall depth:** | 1000 mm (incl. extension) |
| **Height:** | 1022 mm |
| **Primary material:** | Solid timber, European standard sizes |
| **Leg section:** | 80 × 80 mm eiken balk |
| **Stretchers / Aprons:** | 52 × 75 mm beuken gestoomd |
| **Wall beam:** | 80 × 80 mm eiken (wall-anchored) |
| **Slat panels:** | 20 × 15 mm, 10 mm gaps |
| **Twinset storage:** | 6× D12 twinsets (3 cols × 2 rows) |
| **Sheets included:** | 14 (title, BOM, elevations, plan, manual, details) |

# BILL OF MATERIALS

| Part / Description | Material | Qty | W mm | D mm | L mm | Notes |
|---|---|---|---|---|---|---|
| Leg 80×80mm | Eiken balk | 6 | 80 | 80 | 970 | Alle constructiepoten |
| Strekker 52×75mm — linkerzijde | Beuken gestoomd | 1 | 52 | 75 | 790 | Voorkant-links tot wand, onderste regel |
| Strekker 52×75mm — uitbouw links | Beuken gestoomd | 1 | 52 | 75 | 790 | Uitbouw linkerzijde, onderste regel |
| Apron 52×75mm — linkerzijde | Beuken gestoomd | 1 | 52 | 75 | 790 | Voorkant-links tot wand, bovenste regel |
| Apron 52×75mm — uitbouw links | Beuken gestoomd | 1 | 52 | 75 | 950 | Uitbouw linkerzijde, bovenste regel |
| Wandbalk 80×80mm | Eiken balk | 1 | 80 | 80 | 2600 | Wandgemonteerde achterbalk; ankerbouten in muur |
| Montageregel 52×75mm — voorzijde | Beuken gestoomd | 2 | 52 | 75 | 540 | Onder + boven rail voor lattenwand voorzijde |
| Rail 52×75mm — rechterzijde boven | Beuken gestoomd | 1 | 52 | 75 | 790 | Bovenste rail, rechterzijde twinset nis |
| Tafelblad (L-vorm) | Beuken gestoomd 52mm (edge-glued) | 1 | 2700 | 1000 | 52 | L-vorm 2700×800+uitbouw 800×200mm — zie tekening |
| Slat 20×15mm — front wall | Solid timber | 18 | 20 | 15 | 940 | Decorative front slat panel |
| Slat 20×15mm — left side wall | Solid timber | 26 | 20 | 15 | 940 | Decorative left-side slat panel |
| **Pocket screws 50mm** | Steel | 60 | — | — | 50 | Leg-to-apron/stretcher joints (~4 per joint) |
| Lag screw M10×120mm | Steel (hot-dip galv.) | 6 | — | — | 120 | Wall beam to masonry/stud wall |
| **Wood screw 3.5×35mm** | Steel | 176 | — | — | 35 | Slat to mounting rail (2 per end per slat) |

## ELEVATIONS

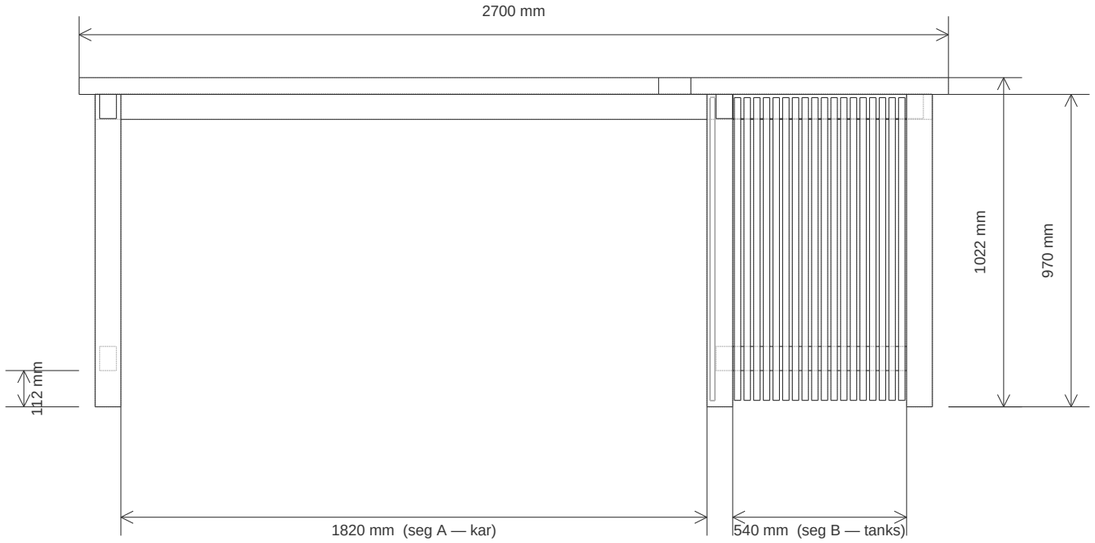


**FRONT ELEVATION**

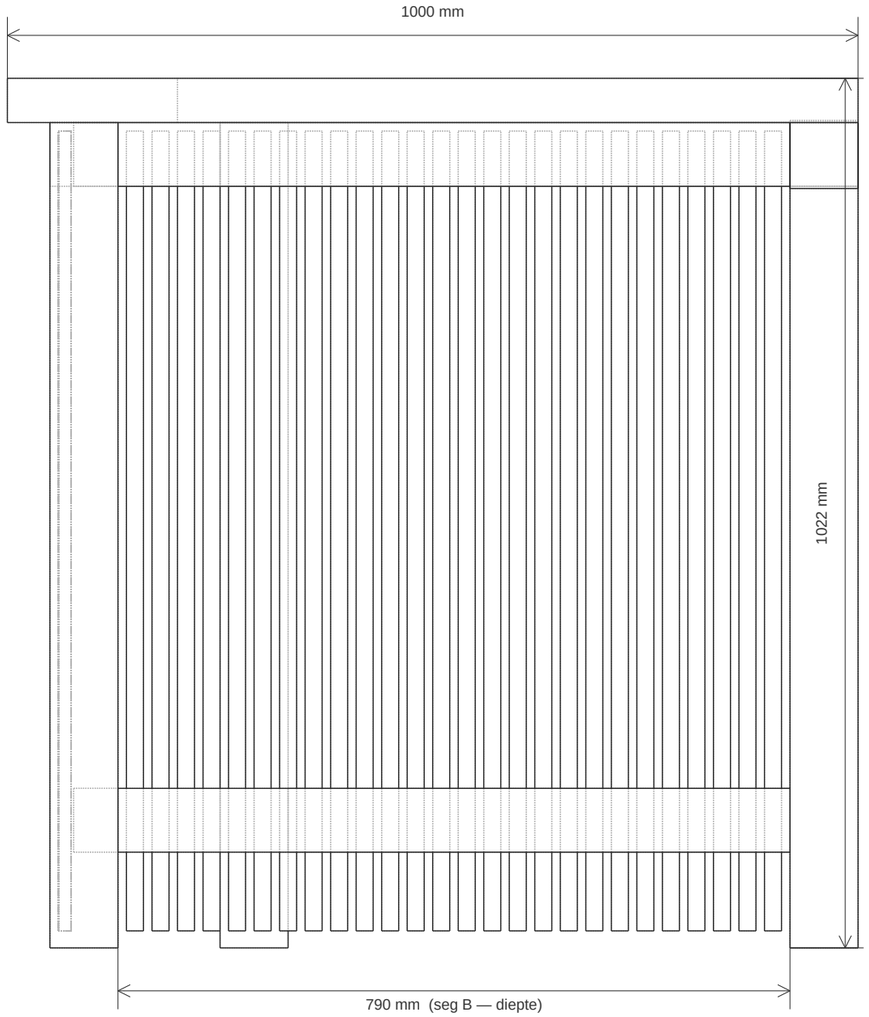


**RIGHT SIDE ELEVATION**

| | | | |
|---|---|---|---|
| **Dennis Bakhuis — Workshop Workbench v2** | Elevations — Front & Right Side | Scale: NTS | Sheet 3 of 14 |

## PLAN & 3D VIEW

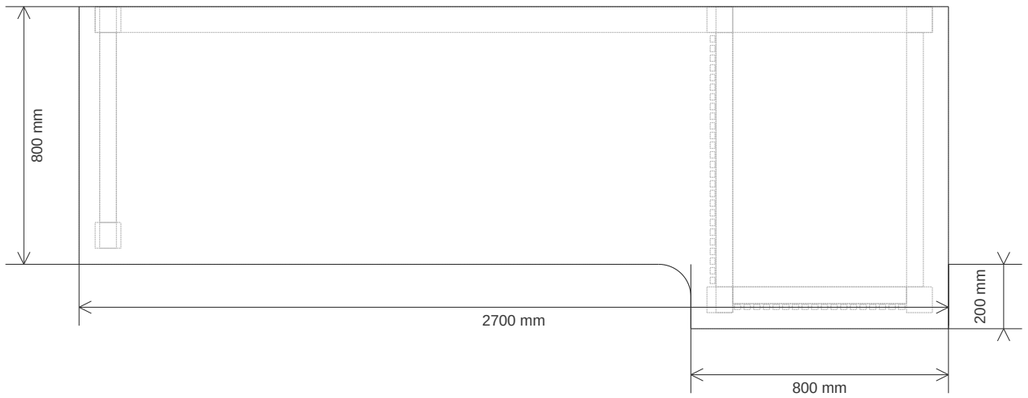


TOP PLAN

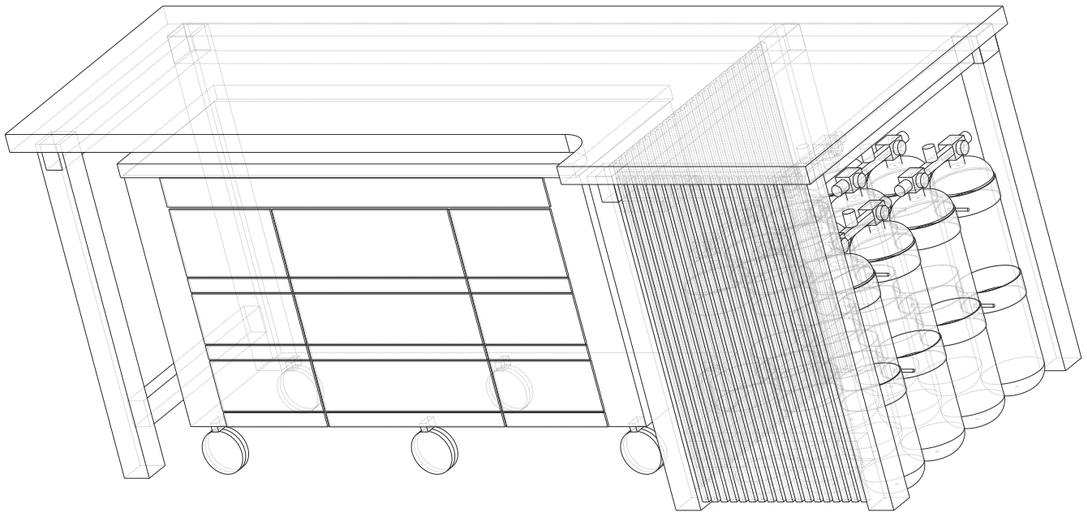

ISOMETRIC VIEW

| | | | |
|---|---|---|---|
| **Dennis Bakhuis — Workshop Workbench v2** | Plan & Isometric | Scale: NTS | Sheet 4 of 14 |

# 1 Step 1 — Install All Legs

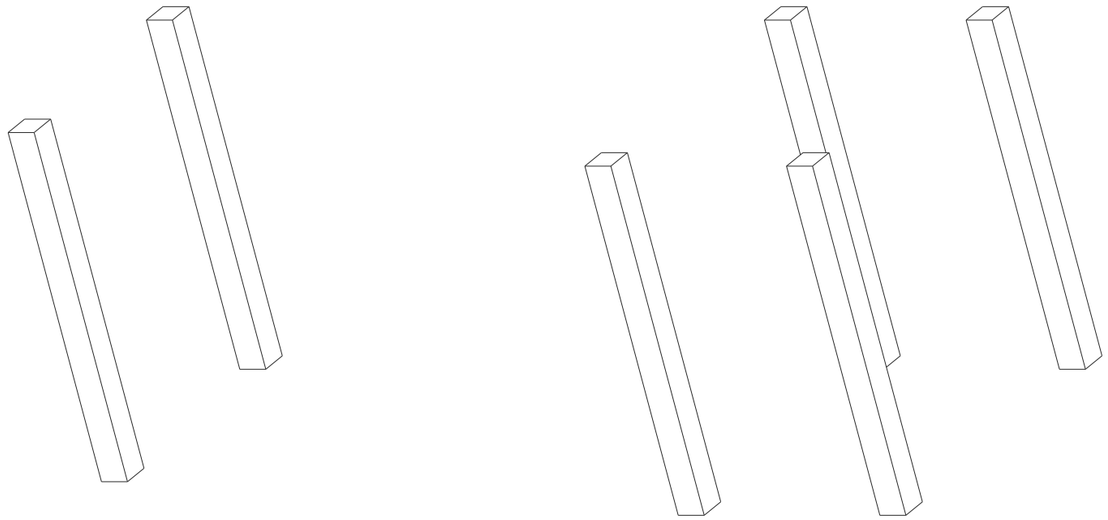

### Instructions

- Cut all legs to 970 mm from 80×80 mm eiken balk.
- Mark leg positions on the floor using the plan drawing.
- Three wall legs will be bolted directly to the wall — set aside.
- Stand all floor legs upright. Check plumb with a spirit level.

### Parts used in this step

- Poot 80×80 mm × 6 totaal

# 2 Step 2 — Fit Bottom Stretchers

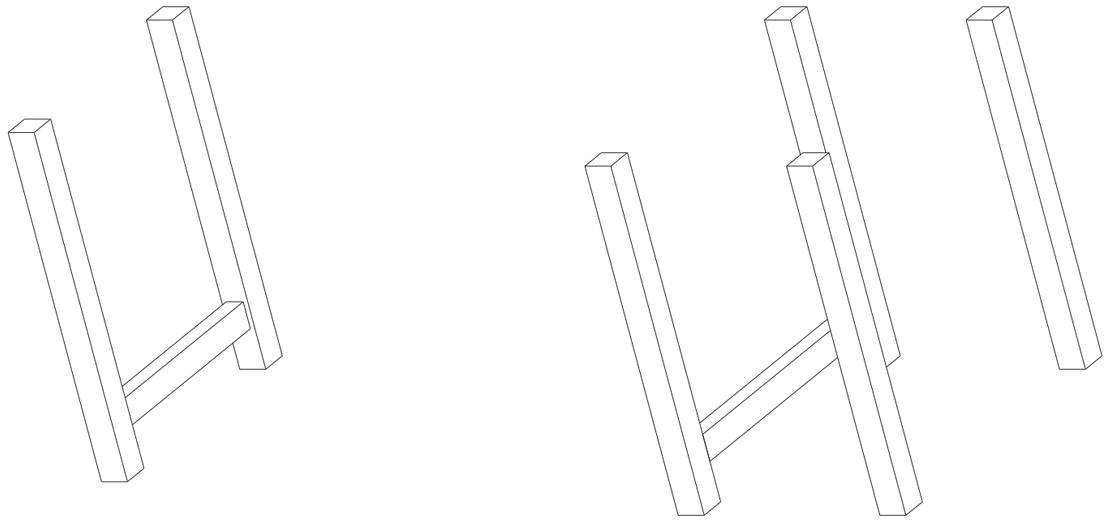

### Instructions

- Cut stretchers from 52×75 mm beuken gestoomd (see BOM for lengths).
- Cut mortises in legs: 18×60 mm, 32 mm deep, centred on face.
- Cut tenons on stretcher ends: 18×60×30 mm, 16 mm shoulders.
- Dry fit all joints before gluing.
- Position stretchers at 150 mm from floor (centre).
- Clamp in place and drill pocket-screw holes (Kreg jig or similar).
- Drive 2× 50 mm pocket screws per joint end. Do not overtighten.

### Parts used in this step

- ■ Strekker 52×75 mm × 2
- ■ Pocket screw 50 mm × 8

# 3 Step 3 — Fit Top Aprons & Wall Beam

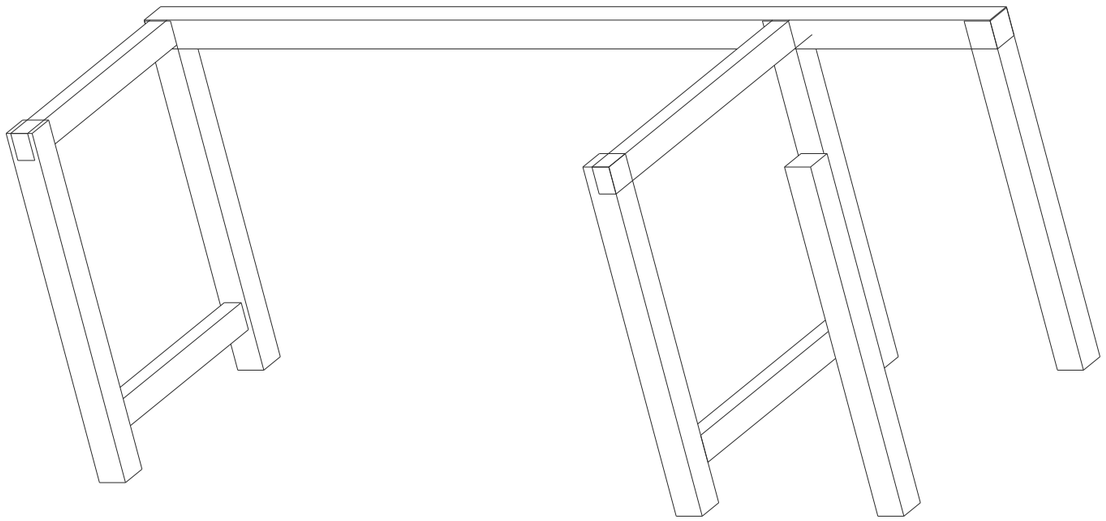

### Instructions

- Cut aprons from 52×75 mm beuken gestoomd — same lengths as stretchers.
- Fix aprons at 932 mm from floor (centre), flush with leg inner faces.
- Mount wall beam (80×80 mm eiken) to wall at apron height using M10×120 mm lag screws.
- Space lag screws at 600 mm centres — use rawlplugs in masonry.
- Bolt back apron to face of wall beam.

### Parts used in this step

- Apron 52×75 mm × 2
- Wandbalk 80×80 mm × 1
- M10×120 lag screw × 6

# 4 Step 4 — Lay the Tabletop

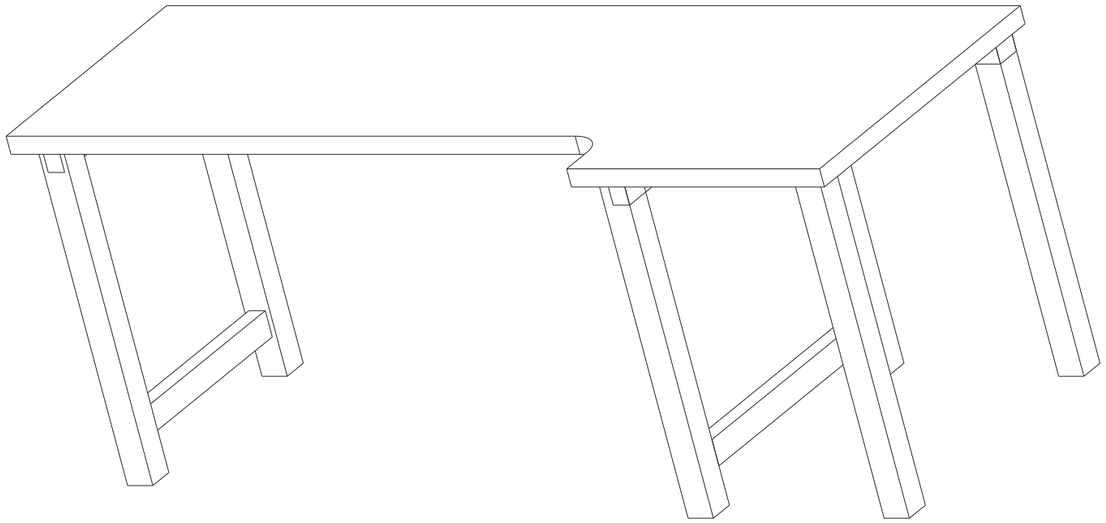

### Instructions

- Cut tabletop to 2700 × 800 mm from 52 mm beuken gestoomd (edge-glued).
- Lower onto frame. Check overhang is equal on all sides.
- Fix from below through apron top edge using pocket screws or figure-8 clips.
- Allow for wood movement — do not fully glue to frame.

### Parts used in this step

- ■ Tafelblad 2700×800×52 mm × 1
- ■ Pocket screw 50 mm × 16

# 5 Step 5 — Fit Slat Mounting Rails

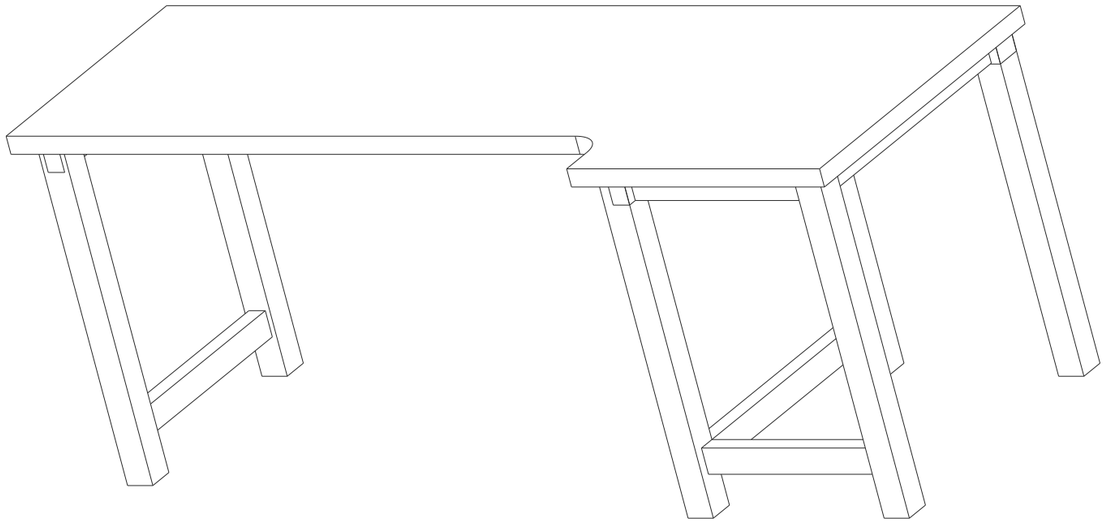

### Instructions

- Cut front rails and right-side rail from 52×75 mm beuken gestoomd (see BOM).
- Position rails flush with leg inner faces — check alignment carefully.
- Slat wall sits 10 mm inside the leg outer face — rails go directly behind.
- Fix rails with 2× pocket screws per leg joint.

### Parts used in this step

- Montagregel 52×75 mm × 3 (voor ×2, rechts ×1)
- Pocket screw 50 mm × 12

# 6 Step 6 — Hang Slat Panels

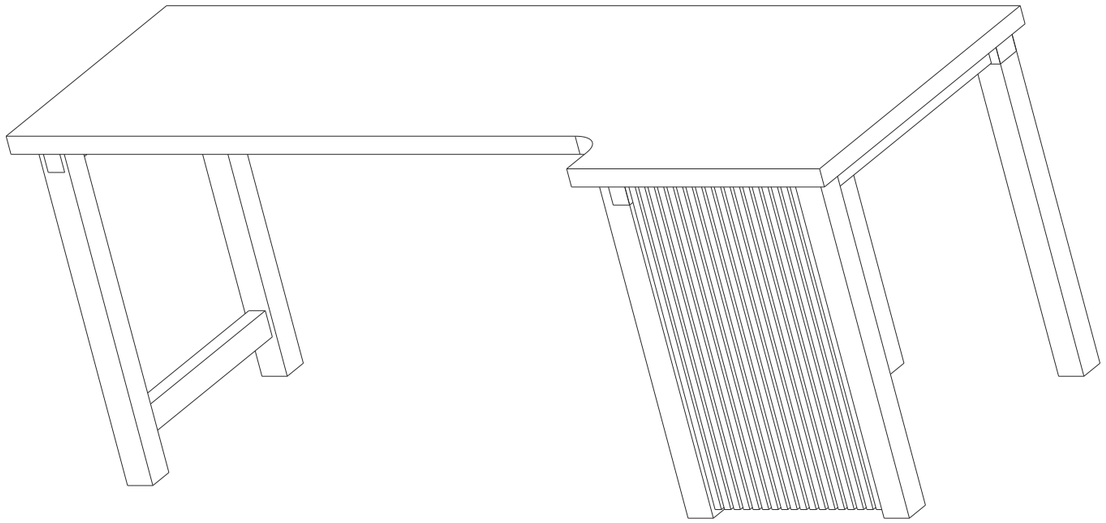

### Instructions

- Cut slats to 940 mm from 20×15 mm timber. Start 20 mm above floor, stop 10 mm below tabletop
- underside. Screw to mounting rails.
- Space slats 10 mm apart — use a scrap spacer block for consistency.
- Drive 2× 3.5×35 mm screws per slat end (top and bottom rail).
- Front panel: slats run vertically across X, spaced along X.
- Left side panel: slats run vertically across Y, spaced along Y.

### Parts used in this step

- Slat 20×15 mm — see BOM for qty and length
- Wood screw 3.5×35 mm — see BOM for qty

# DIMENSIONS & CONSTRUCTION DETAILS

## KEY DIMENSIONS & MATERIALS

| | |
|---|---|
| **Overall length:** | 2700 mm |
| **Overall width (main):** | 800 mm |
| **Extension depth:** | 200 mm |
| **Total depth:** | 1000 mm |
| **Leg height:** | 970 mm |
| **Tabletop thickness:** | 52 mm |
| **Overall height:** | 1022 mm |
| **Legs:** | 80 × 80 mm eiken balk |
| **Stretchers:** | 52 × 75 mm (at 150 mm from floor) |
| **Aprons:** | 52 × 75 mm (at 932 mm from floor) |
| **Wall beam:** | 80 × 80 mm, wall-anchored |
| **Slats:** | 20 × 15 mm, 10 mm gaps |

## CONSTRUCTION NOTES — JOINTS & FIXING

### 1. LEG TO APRON & STRETCHER

2× pocket screws (50 mm) per joint.
Apron flush with leg inner face.
Pre-drill and countersink to avoid splitting.

### 2. WALL BEAM TO WALL

80×80 mm eiken wandbalk op apronhoogte (932 mm).
M10×120 mm lag screws at 600 mm spacing.
Use rawlplugs / expansion anchors for masonry.

### 3. SLAT WALL MOUNTING

Two horizontal rails per slat wall (bottom + top).
Slats fixed with 2× 3.5×35 mm screws per rail.
10 mm gap between slats; 10 mm float above floor.

### 4. TABLETOP

Screwed from below through apron top edge.
Figure-8 clips or pocket screws for wood movement.

# PART DRAWING — TABLETOP (L-SHAPED)

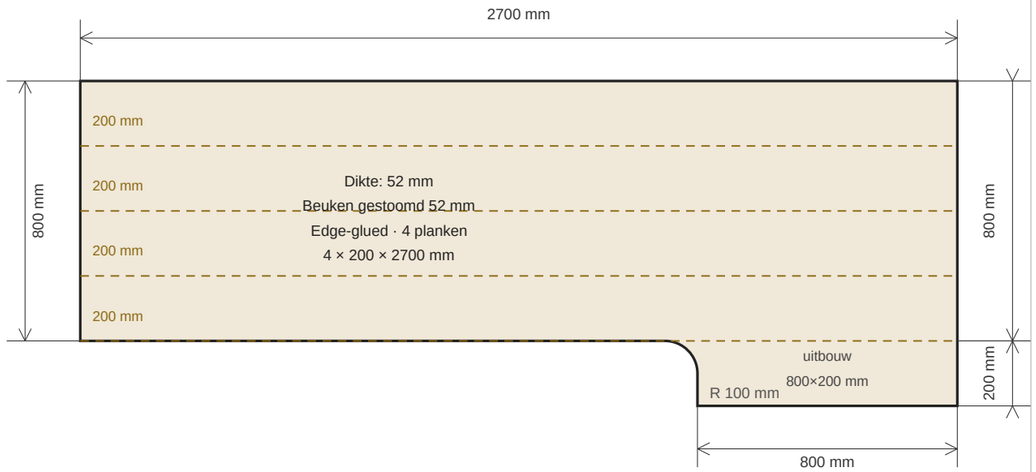


**TOP VIEW (schematic, NTS)**

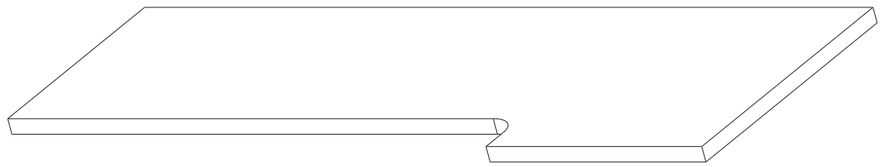

**ISOMETRIC VIEW**

| | | | |
|---|---|---|---|
| **Dennis Bakhuis — Workshop Workbench v2** | Part Drawing — Tabletop | Scale: NTS | Sheet 12 of 14 |

# VERBINDINGSDETAIL — PEN & GAT (M&T)

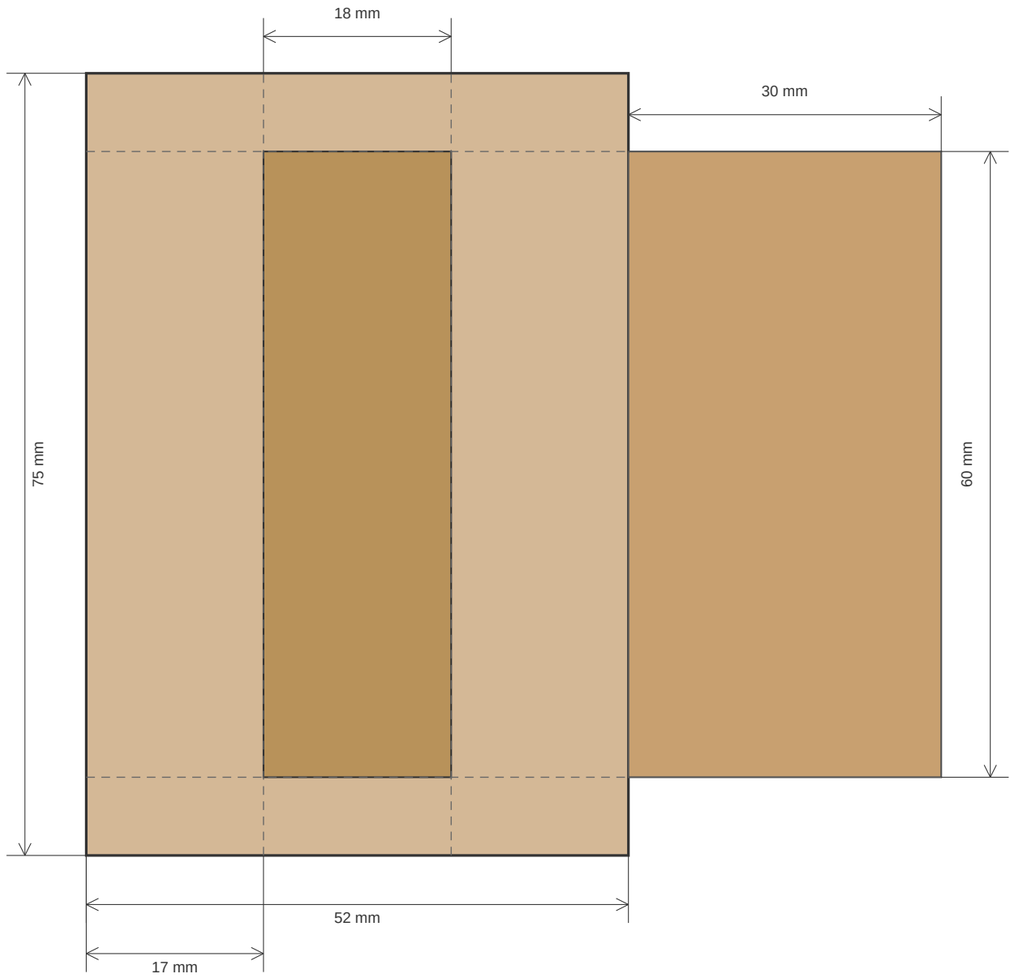


**PEN (zijaanzicht eindvlak, Y-Z vlak)**

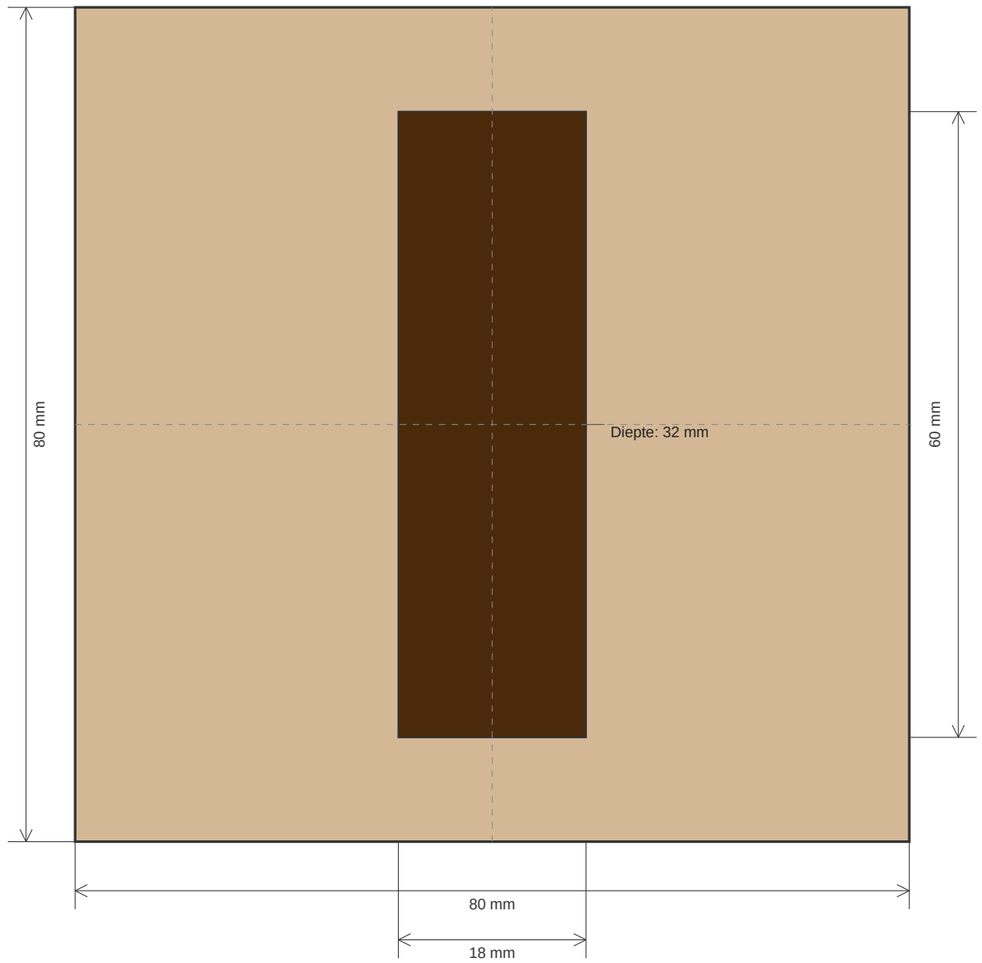


**GAT (vooraanzicht pootvlak, X-Z vlak)**

- Verlijmen met D3 houtlijm. Pen volledig insmeren, gat droog laten.
- Klemmen: 30 min. Uithardingstijd: 24h voor belasting.
- Freesmachine met rechte frees of gatenboor + beitel.

| | | | |
|---|---|---|---|
| **Dennis Bakhuis — Workshop Workbench v2** | Verbindingsdetail — Pen & Gat (M&T) | Scale: NTS | Sheet 13 of 14 |

# TIMBER PARTS — INDIVIDUAL PART DRAWINGS

**Leg 80×80mm**



Section: 80 × 80 mm
Length: 970 mm
Qty: 6
Alle constructiepoten

**Strekker 52×75mm**



Section: 52 × 75 mm
Length: 790 mm
Qty: 1
Voorkant-links tot wand, onderste regel

**Strekker 52×75mm**



Section: 52 × 75 mm
Length: 790 mm
Qty: 1
Uitbouw linkerzijde, onderste regel

**Apron 52×75mm**



Section: 52 × 75 mm
Length: 790 mm
Qty: 1
Voorkant-links tot wand, bovenste regel

**Apron 52×75mm**



Section: 52 × 75 mm
Length: 950 mm
Qty: 1
Uitbouw linkerzijde, bovenste regel

**Wandbalk 80×80mm**



Section: 80 × 80 mm
Length: 2600 mm
Qty: 1
Wandgemonteerde achterbalk; ankerbouten in muur