WORKSHOP WORKBENCH

Version 2 — Construction Set

Overall length:	2700 mm
Overall depth:	1000 mm (incl. extension)
Height:	1022 mm
Primary material:	Solid timber, European standard sizes
Leg section:	80 × 80 mm oak timber
Stretchers / Aprons:	52 × 75 mm steamed beech
Wall beam:	80 × 80 mm oak (wall-anchored)
Slat panels:	20 × 15 mm, 10 mm gaps
Twinset storage:	6× D12 twinsets (3 cols × 2 rows)
Sheets included:	14 (title, BOM, elevations, plan, manual, details)

BILL OF MATERIALS

Part / Description	Material	Qty	W mm	D mm	L mm	Notes
Leg 80×80mm	Oak timber	6	80	80	970	All structural legs
Stretcher 52×75mm — left side	Steamed beech	1	52	75	790	Front-left to wall, bottom rail
Stretcher 52×75mm — ext. left	Steamed beech	1	52	75	790	Ext. left side, bottom rail
Apron 52×75mm — left side	Steamed beech	1	52	75	790	Front-left to wall, top rail
Apron 52×75mm — ext. left	Steamed beech	1	52	75	950	Ext. left side, top rail
Wall beam 80×80mm	Oak timber	1	80	80	2600	Wall-mounted rear beam; lag screws into wall
Mounting rail 52×75mm — front	Steamed beech	2	52	75	540	Bottom + top rail for front slat wall
Rail 52×75mm — right side top	Steamed beech	1	52	75	790	Top rail, right side twinset enclosure
Tabletop (L-shape)	Steamed beech 52mm (edge-glued)	1	2700	1000	52	L-shape 2700×800mm + ext. 800×200mm — see drawing
Slat 20×15mm — front wall	Solid timber	18	20	15	940	Decorative front slat panel
Slat 20×15mm — left side wall	Solid timber	26	20	15	940	Decorative left-side slat panel
Pocket screws 50mm	Steel	60	—	—	50	Leg-to-apron/stretcher joints (~4 per joint)
Lag screw M10×120mm	Steel (hot-dip galv.)	6	—	—	120	Wall beam to masonry/stud wall
Wood screw 3.5×35mm	Steel	176	—	—	35	Slat to mounting rail (2 per end per slat)

ELEVATIONS

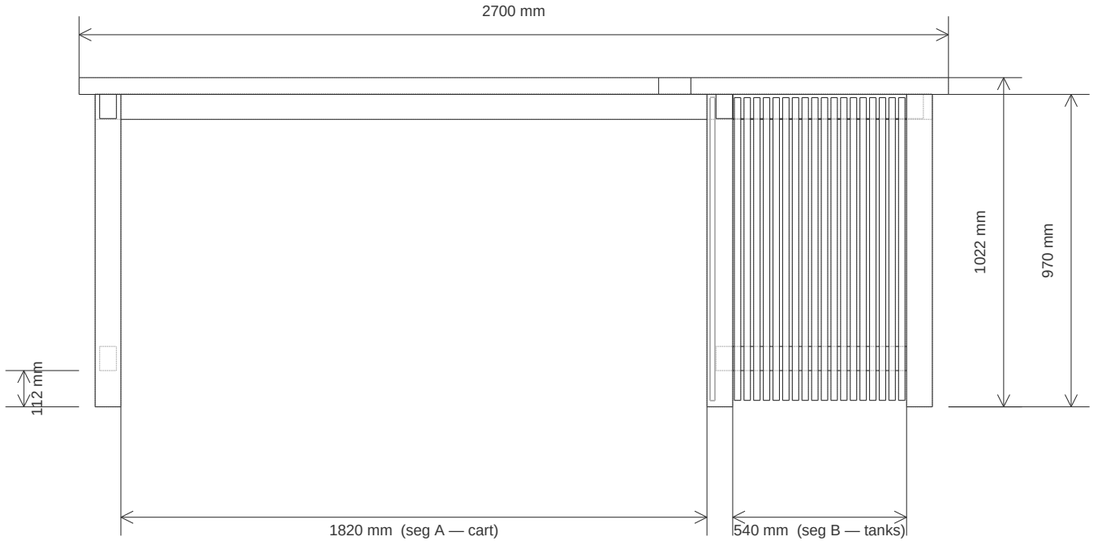

FRONT ELEVATION

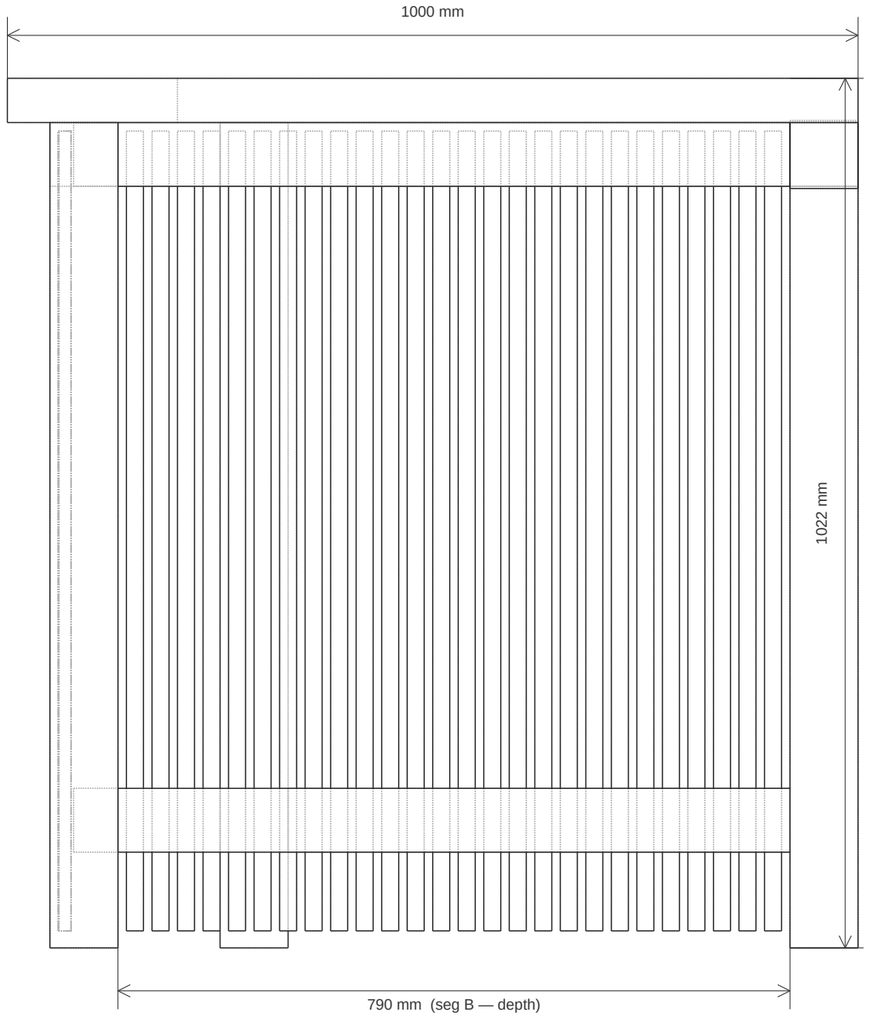

RIGHT SIDE ELEVATION

Dennis Bakhuis — Workshop Workbench v2	Elevations — Front & Right Side	Scale: NTS	Sheet 3 of 14

PLAN & 3D VIEW

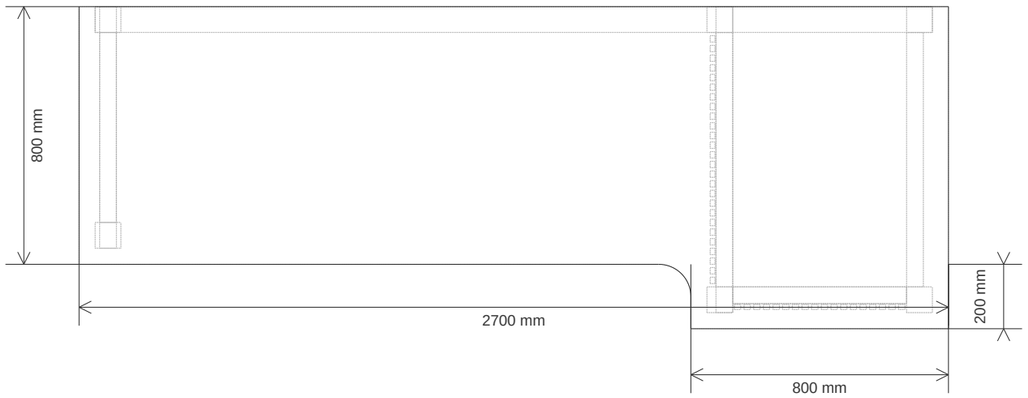

TOP PLAN

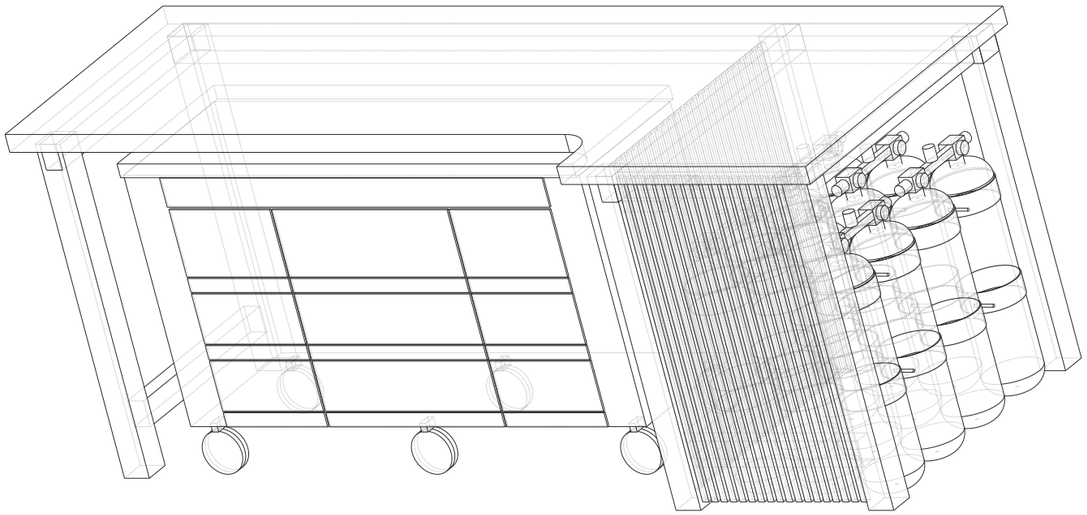

ISOMETRIC VIEW

Dennis Bakhuis — Workshop Workbench v2	Plan & Isometric	Scale: NTS	Sheet 4 of 14

1 Step 1 — Install All Legs

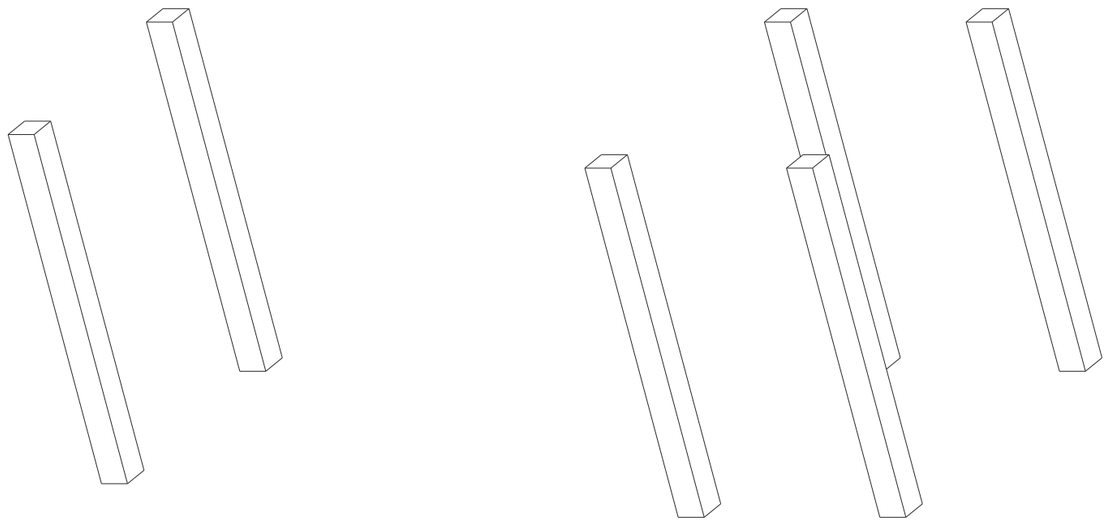

Instructions

- Cut all legs to 970 mm from 80×80 mm oak timber.
- Mark leg positions on the floor using the plan drawing.
- Three wall legs will be bolted directly to the wall — set aside.
- Stand all floor legs upright. Check plumb with a spirit level.

Parts used in this step

- Leg 80×80 mm × 6 total

2 Step 2 — Fit Bottom Stretchers

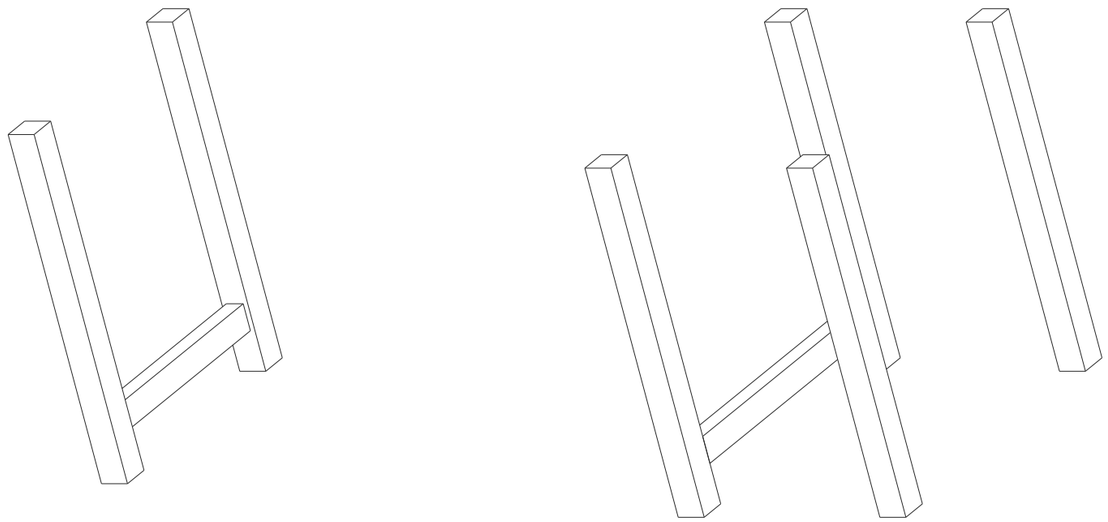

Instructions

- Cut stretchers from 52×75 mm steamed beech (see BOM for lengths).
- Cut mortises in legs: 18×60 mm, 32 mm deep, centred on face.
- Cut tenons on stretcher ends: 18×60×30 mm, 16 mm shoulders.
- Dry fit all joints before gluing.
- Position stretchers at 150 mm from floor (centre).
- Clamp in place and drill pocket-screw holes (Kreg jig or similar).
- Drive 2× 50 mm pocket screws per joint end. Do not overtighten.

Parts used in this step

- ■ Stretcher 52×75 mm × 2
- ■ Pocket screw 50 mm × 8

3 Step 3 — Fit Top Aprons & Wall Beam

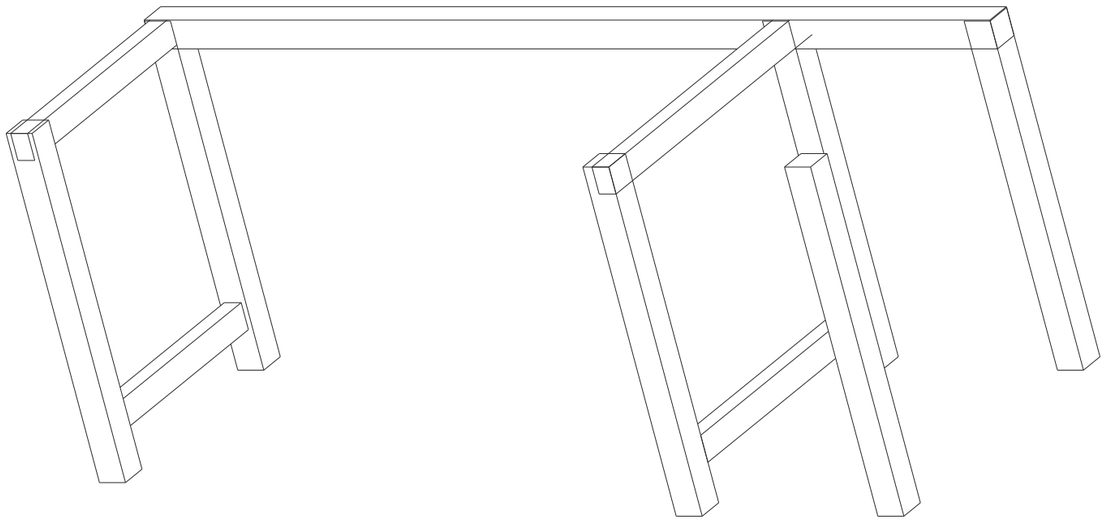

Instructions

- Cut aprons from 52×75 mm steamed beech — same lengths as stretchers.
- Fix aprons at 932 mm from floor (centre), flush with leg inner faces.
- Mount wall beam (80×80 mm oak) to wall at apron height using M10×120 mm lag screws.
- Space lag screws at 600 mm centres — use rawlplugs in masonry.
- Bolt back apron to face of wall beam.

Parts used in this step

- Apron 52×75 mm × 2
- Wall beam 80×80 mm × 1
- M10×120 lag screw × 6

4 Step 4 — Lay the Tabletop

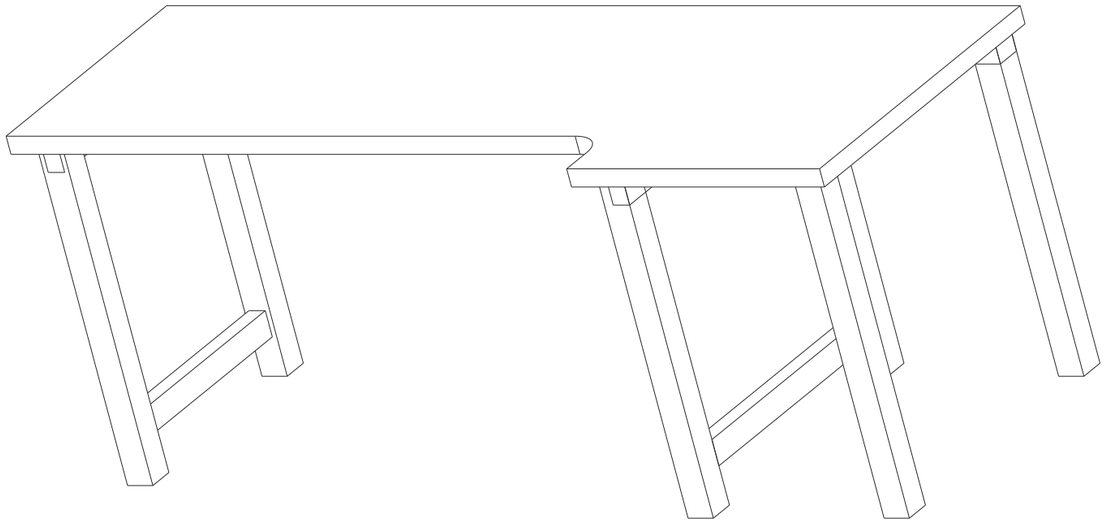

Instructions

- Cut tabletop to 2700 × 800 mm from 52 mm steamed beech (edge-glued).
- Lower onto frame. Check overhang is equal on all sides.
- Fix from below through apron top edge using pocket screws or figure-8 clips.
- Allow for wood movement — do not fully glue to frame.

Parts used in this step

- ■ Tabletop 2700×800×52 mm × 1
- ■ Pocket screw 50 mm × 16

5 Step 5 — Fit Slat Mounting Rails

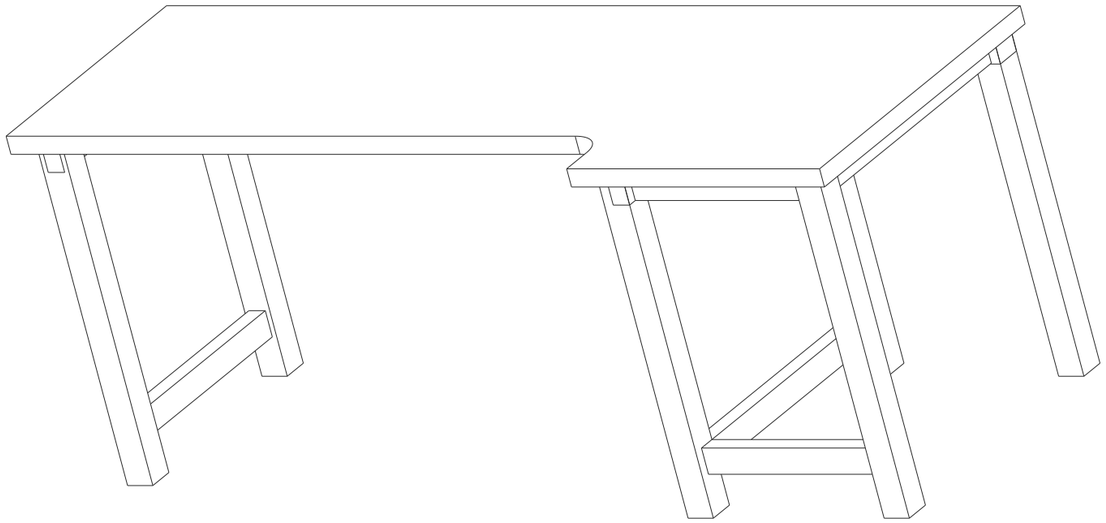

Instructions

- Cut front rails and right-side rail from 52×75 mm steamed beech (see BOM).
- Position rails flush with leg inner faces — check alignment carefully.
- Slat wall sits 10 mm inside the leg outer face — rails go directly behind.
- Fix rails with 2× pocket screws per leg joint.

Parts used in this step

- ■ Mounting rail 52×75 mm × 3 (front ×2, right ×1)
- ■ Pocket screw 50 mm × 12

6 Step 6 — Hang Slat Panels

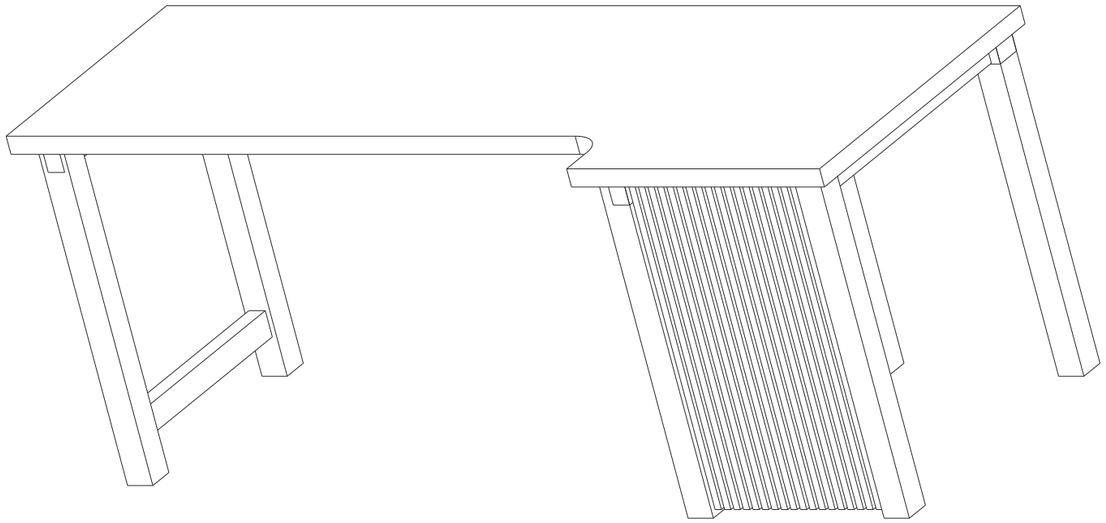

Instructions

- Cut slats to 940 mm from 20×15 mm timber. Start 20 mm above floor, stop 10 mm below tabletop
- underside. Screw to mounting rails.
- Space slats 10 mm apart — use a scrap spacer block for consistency.
- Drive 2× 3.5×35 mm screws per slat end (top and bottom rail).
- Front panel: slats run vertically across X, spaced along X.
- Left side panel: slats run vertically across Y, spaced along Y.

Parts used in this step

- Slat 20×15 mm — see BOM for qty and length
- Wood screw 3.5×35 mm — see BOM for qty

DIMENSIONS & CONSTRUCTION DETAILS

KEY DIMENSIONS & MATERIALS

Overall length:	2700 mm
Overall width (main):	800 mm
Extension depth:	200 mm
Total depth:	1000 mm
Leg height:	970 mm
Tabletop thickness:	52 mm
Overall height:	1022 mm
Legs:	80 × 80 mm oak timber
Stretchers:	52 × 75 mm (at 150 mm from floor)
Aprons:	52 × 75 mm (at 932 mm from floor)
Wall beam:	80 × 80 mm, wall-anchored
Slats:	20 × 15 mm, 10 mm gaps

CONSTRUCTION NOTES — JOINTS & FIXING

1. LEG TO APRON & STRETCHER

2× pocket screws (50 mm) per joint.
Apron flush with leg inner face.
Pre-drill and countersink to avoid splitting.

2. WALL BEAM TO WALL

80×80 mm oak wall beam at apron height (932 mm).
M10×120 mm lag screws at 600 mm spacing.
Use rawlplugs / expansion anchors for masonry.

3. SLAT WALL MOUNTING

Two horizontal rails per slat wall (bottom + top).
Slats fixed with 2× 3.5×35 mm screws per rail.
10 mm gap between slats; 10 mm float above floor.

4. TABLETOP

Screwed from below through apron top edge.
Figure-8 clips or pocket screws for wood movement.

PART DRAWING — TABLETOP (L-SHAPED)

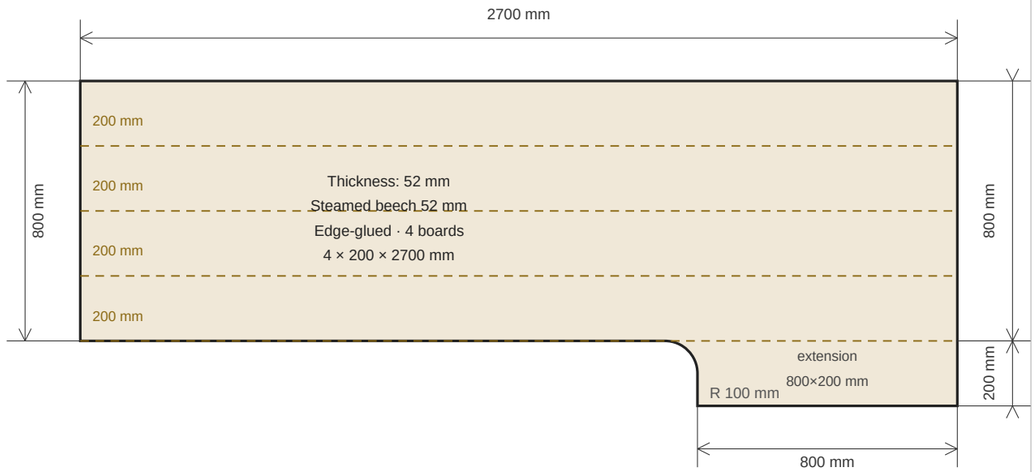

TOP VIEW (schematic, NTS)

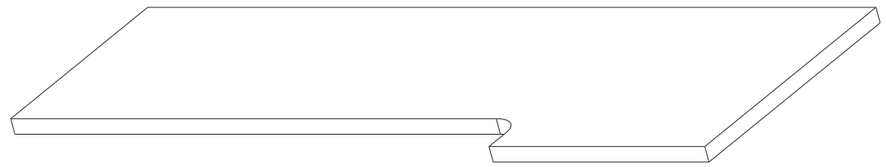

ISOMETRIC VIEW

Dennis Bakhuis — Workshop Workbench v2	Part Drawing — Tabletop	Scale: NTS	Sheet 12 of 14

JOINERY DETAIL — M&T, POCKET SCREWS & ASSEMBLY POSITION

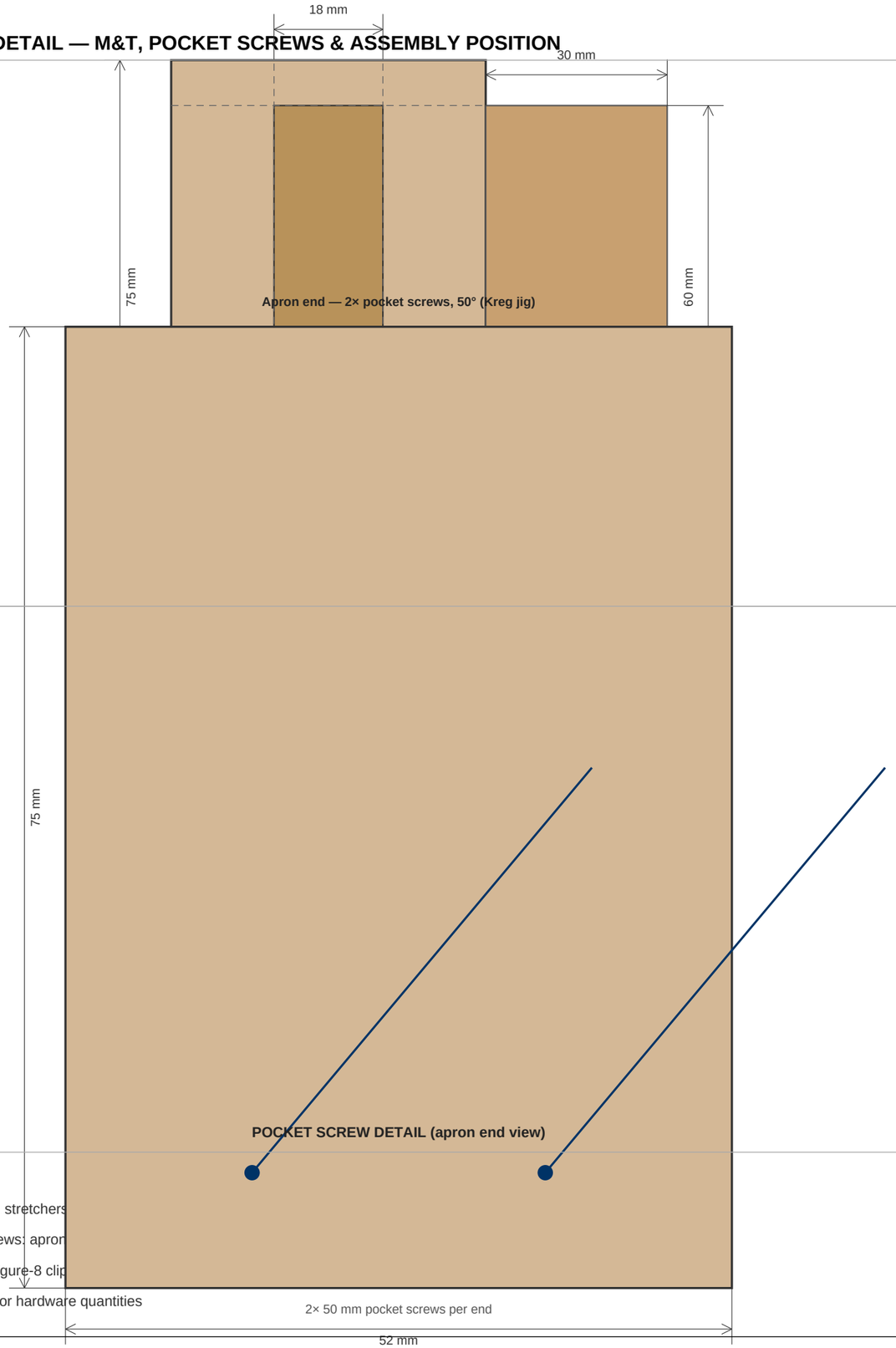

POCKET SCREW DETAIL (apron end view)

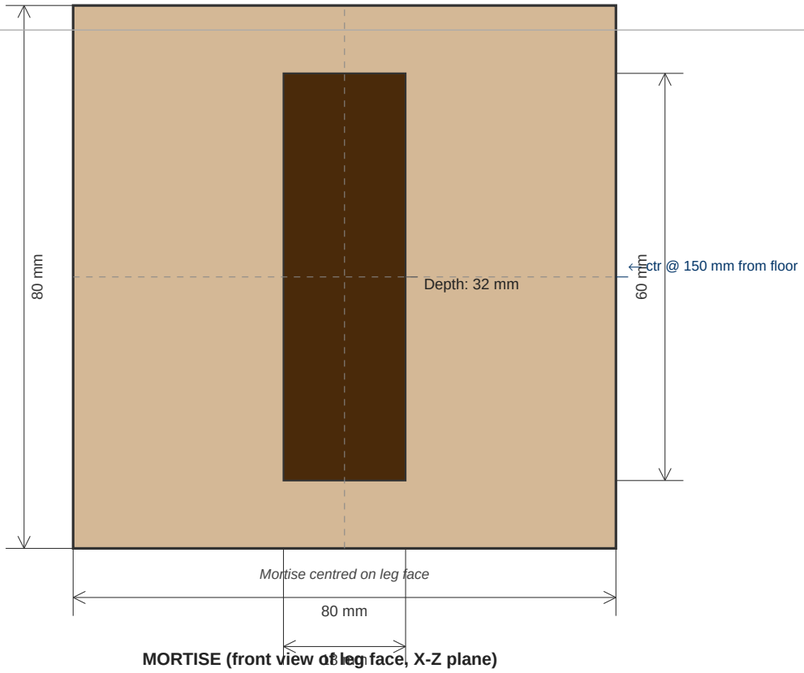

MORTISE (front view of leg face, X-Z plane)

Stretcher — Mortise & Tenon joint

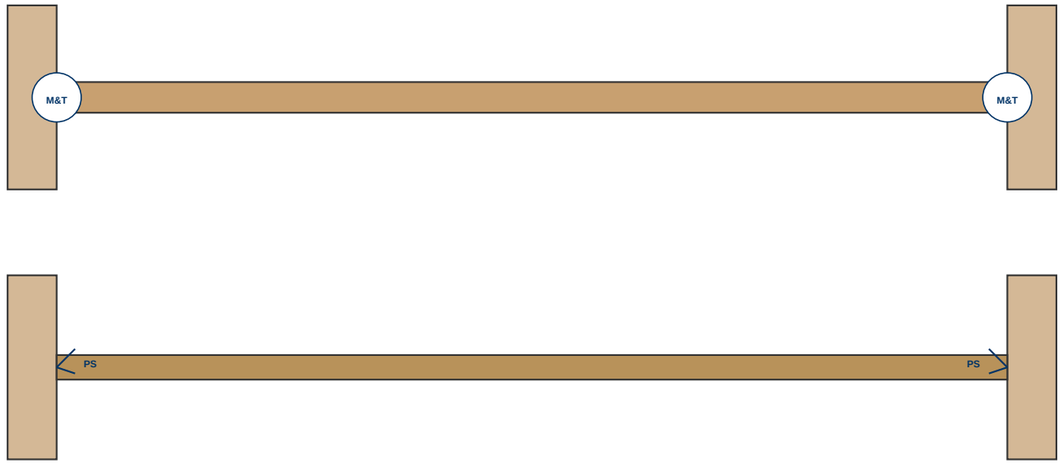

Apron/Rail — Pocket screw

ASSEMBLY POSITION — JOINT TYPES

- M&T joints: stretchers
- Pocket screws: apron
- Tabletop: figure-8 clip
- See BOM for hardware quantities

Dennis Bakhuis — Workshop Workbench v2	Joinery Detail — M&T, Pocket Screws & Assembly	Scale: NTS	Sheet 13 of 14

PARTS — COMPONENT DRAWINGS

Leg 80×80mm

80 × 80 mm · L = 970 mm · ×6

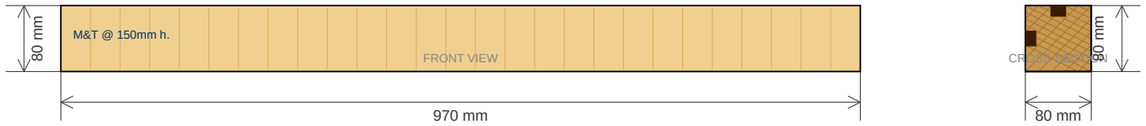

JOINERY: 4× mortise 18×60mm, 32mm deep — per stretcher M&T joint

Stretcher 52×75mm

52 × 75 mm · L = 790 mm · ×4

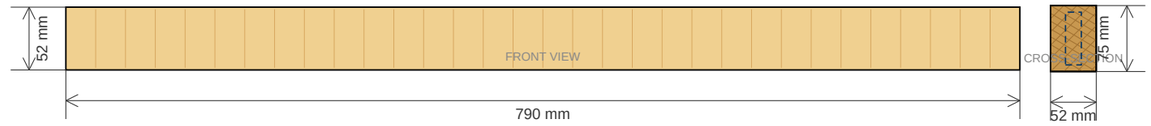

JOINERY: Both ends: tenon 18×60×30mm — glue + pocket screw

Apron 52×75mm

52 × 75 mm · L = 950 mm · ×1

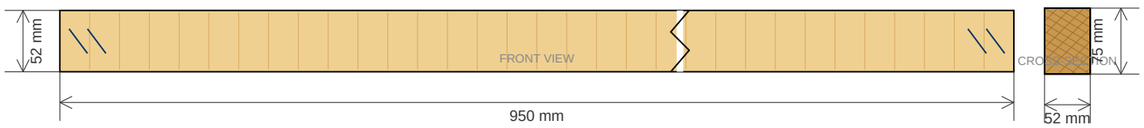

JOINERY: Both ends: 2× pocket screw holes (Kreg jig, 50°)

Wall beam 80×80mm

80 × 80 mm · L = 2600 mm · ×1

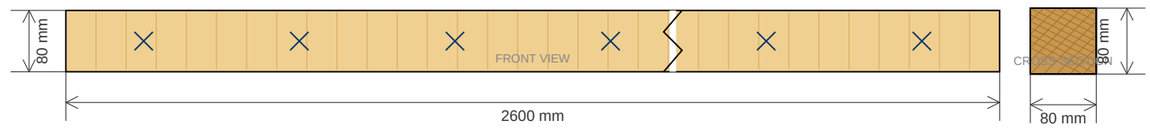

JOINERY: 6× Ø12mm clearance holes at 600mm centres (M10 lag screws)

Mounting rail 52×75mm

52 × 75 mm · L = 540 mm · ×2

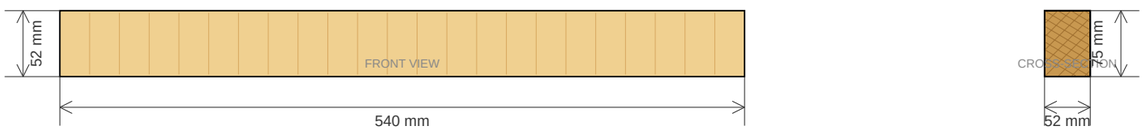

JOINERY: Both ends: 2× pocket screw holes (Kreg jig, 50°)

Tabletop (L-shape)

2700 × 1000 mm · L = 52 mm · ×1

JOINERY: Figure-8 clips or pocket screws from below; no glue to frame

Slat 20×15mm

20 × 15 mm · L = 940 mm · ×44

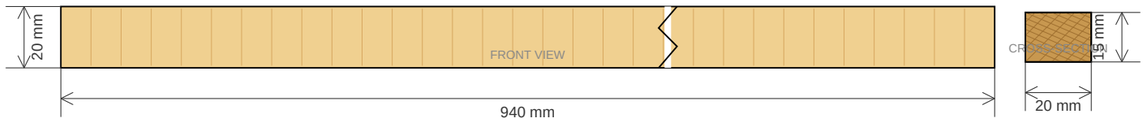

JOINERY: Both ends: Ø3mm pilot hole, 2× 3.5×35mm screw per rail

Dennis Bakhuis — Workshop Workbench v2	Parts — Component Drawings	Scale: NTS	Sheet 14 of 14