WORKSHOP WORKBENCH

Version 2 — Construction Set

Overall length:	2700 mm
Overall depth:	1000 mm (incl. extension)
Height:	1010 mm
Primary material:	Solid timber, European standard sizes
Leg section:	75 × 75 mm
Stretchers / Aprons:	50 × 75 mm
Wall beam:	75 × 75 mm (wall-anchored)
Slat panels:	20 × 15 mm, 10 mm gaps
Twinset storage:	6× D12 twinsets (3 cols × 2 rows)
Sheets included:	14 (title, BOM, elevations, plan, manual, details)

Dennis Bakhuis — Workshop Workbench v2	Title — Project Overview	Scale: NTS	Sheet 1 of 14

BILL OF MATERIALS

Part / Description	Material	Qty	W mm	D mm	L mm	Notes
Leg 75×75mm	Solid timber	6	75	75	970	All structural legs
Stretcher 50×75mm — left side	Solid timber	1	50	75	800	Front-left to wall, bottom rail
Stretcher 50×75mm — ext left	Solid timber	1	50	75	800	Ext-left side, bottom rail
Apron 50×75mm — left side	Solid timber	1	50	75	800	Front-left to wall, top rail
Apron 50×75mm — ext left	Solid timber	1	50	75	950	Ext-left side, top rail
Wall beam 75×75mm	Solid timber	1	2600	75	75	Wall-mounted back beam; lag-screw to wall
Slat mounting rail 50×75mm — front	Solid timber	2	50	75	530	Bottom + top rails for front slat wall
Rail 50×75mm — right side top	Solid timber	1	50	75	800	Top rail, right side of twinset enclosure
Tabletop panel	40mm solid timber / engineered board	1	2700	1000	40	L-shaped top, 2700×1000mm — see part drawing
Slat 20×15mm — front wall	Solid timber	17	20	15	950	Decorative front slat panel
Slat 20×15mm — left side wall	Solid timber	26	20	15	950	Decorative left-side slat panel
Pocket screws 50mm	Steel	60	—	—	50	Leg-to-apron/stretcher joints (~4 per joint)
Lag screw M10×120mm	Steel (hot-dip galv.)	6	—	—	120	Wall beam to masonry/stud wall
Wood screw 3.5×35mm	Steel	172	—	—	35	Slat to mounting rail (2 per end per slat)

ELEVATIONS

FRONT ELEVATION

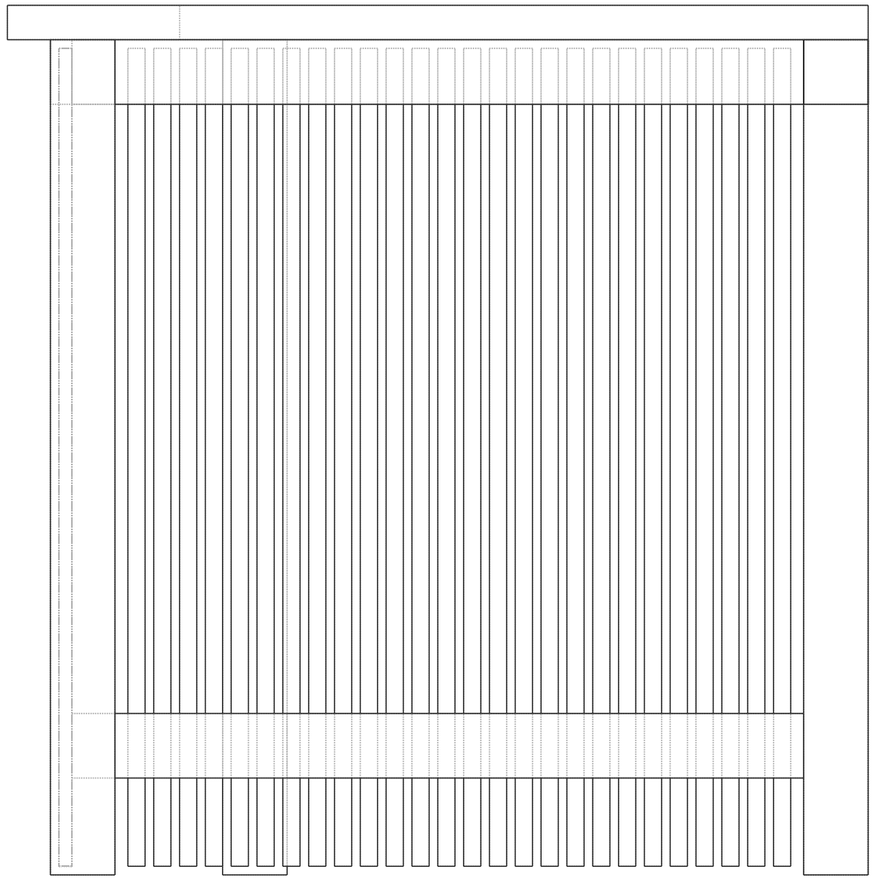

RIGHT SIDE ELEVATION

Dennis Bakhuis — Workshop Workbench v2	Elevations — Front & Right Side	Scale: NTS	Sheet 3 of 14

PLAN & 3D VIEW

TOP PLAN

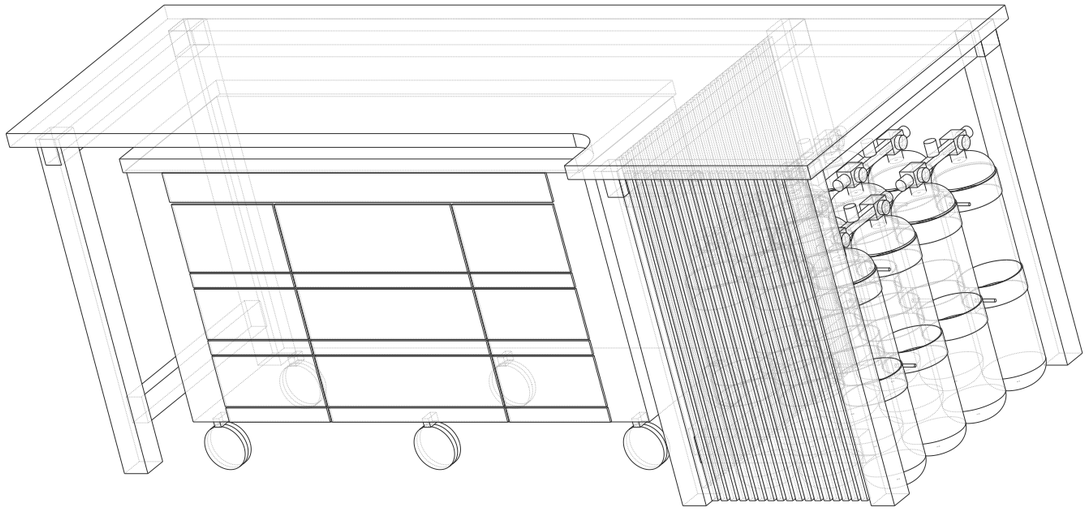

ISOMETRIC VIEW

Dennis Bakhuis — Workshop Workbench v2	Plan & Isometric	Scale: NTS	Sheet 4 of 14

1 Step 1 — Install All Legs

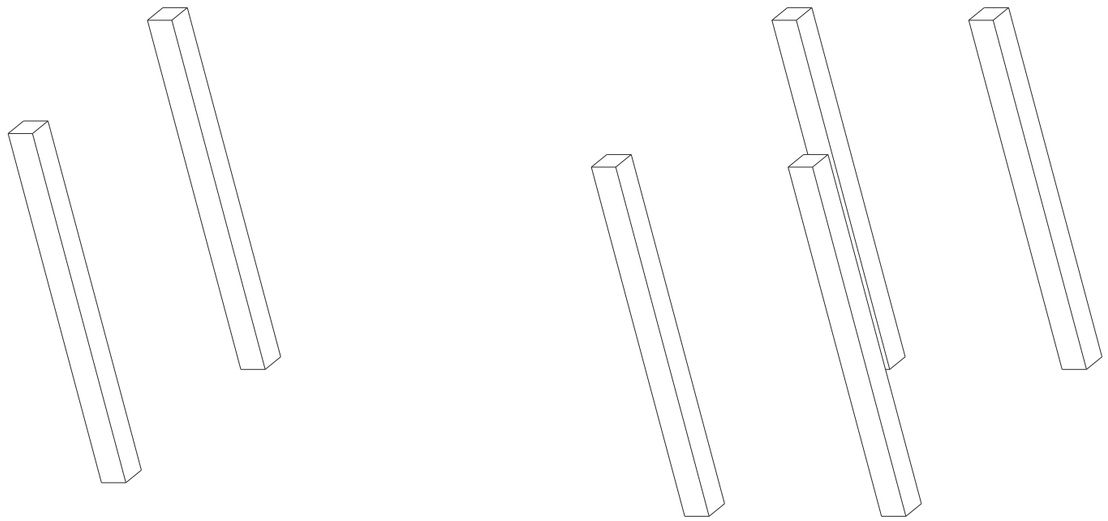

Instructions

- Cut all legs to 960 mm from 75×75 mm timber.
- Mark leg positions on the floor using the plan drawing.
- Three wall legs will be bolted directly to the wall — set aside.
- Stand all floor legs upright. Check plumb with a spirit level.

Parts used in this step

■ Leg 75×75 mm × 8 total

Dennis Bakhuis — Workshop Workbench v2	Step 1 — Install All Legs	Scale: NTS	Sheet 5 of 14

2 Step 2 — Fit Bottom Stretchers

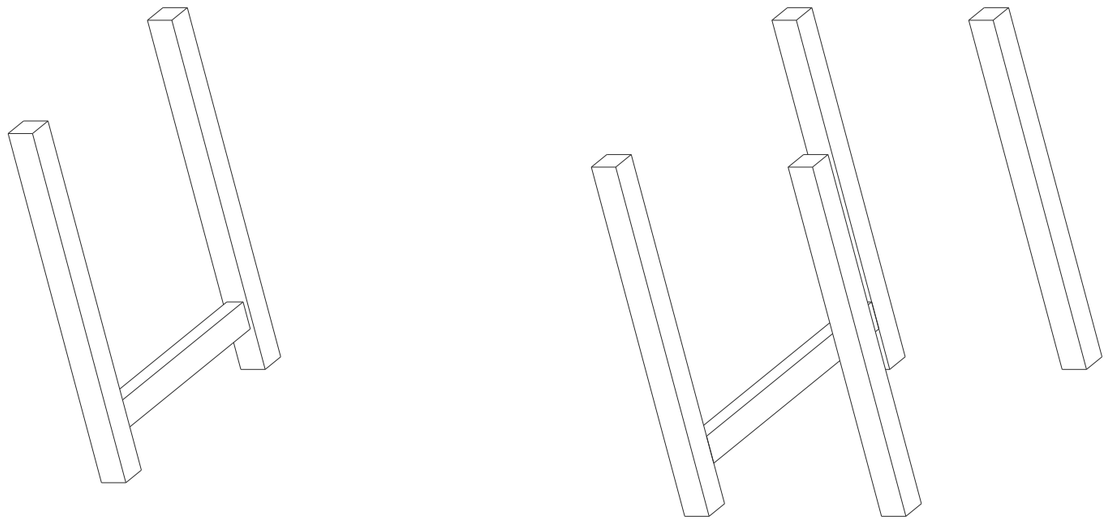

Instructions

- Cut stretchers from 50×75 mm timber (see BOM for lengths).
- Cut mortises in legs: 18×60 mm, 32 mm deep, centred on face.
- Cut tenons on stretcher ends: 18×60×30 mm, 16 mm shoulders.
- Dry fit all joints before gluing.
- Position stretchers at 150 mm from floor (centre).
- Clamp in place and drill pocket-screw holes (Kreg jig or similar).
- Drive 2× 50 mm pocket screws per joint end. Do not overtighten.

Parts used in this step

- ■ Stretcher 50×75 mm × 2
- ■ Pocket screw 50 mm × 8

3 Step 3 — Fit Top Aprons & Wall Beam

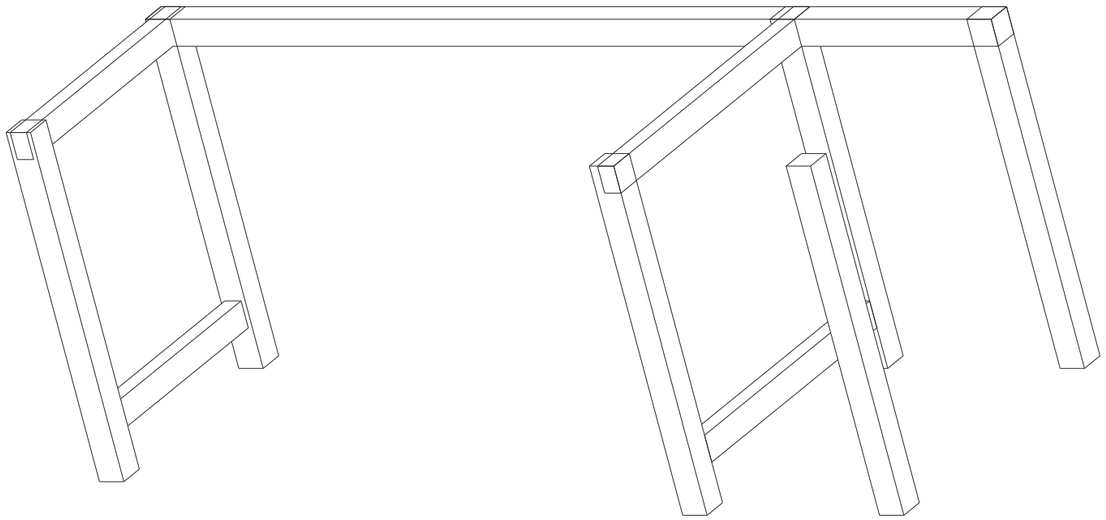

Instructions

- Cut aprons from 50×75 mm timber — same lengths as stretchers.
- Fix aprons at 885 mm from floor (centre), flush with leg inner faces.
- Mount wall beam (75×75 mm) to wall at apron height using M10×120 mm lag screws.
- Space lag screws at 600 mm centres — use rawlplugs in masonry.
- Bolt back apron to face of wall beam.

Parts used in this step

- Apron 50×75 mm × 2
- Wall beam 75×75 mm × 1
- M10×120 lag screw × 6

4 Step 4 — Lay the Tabletop

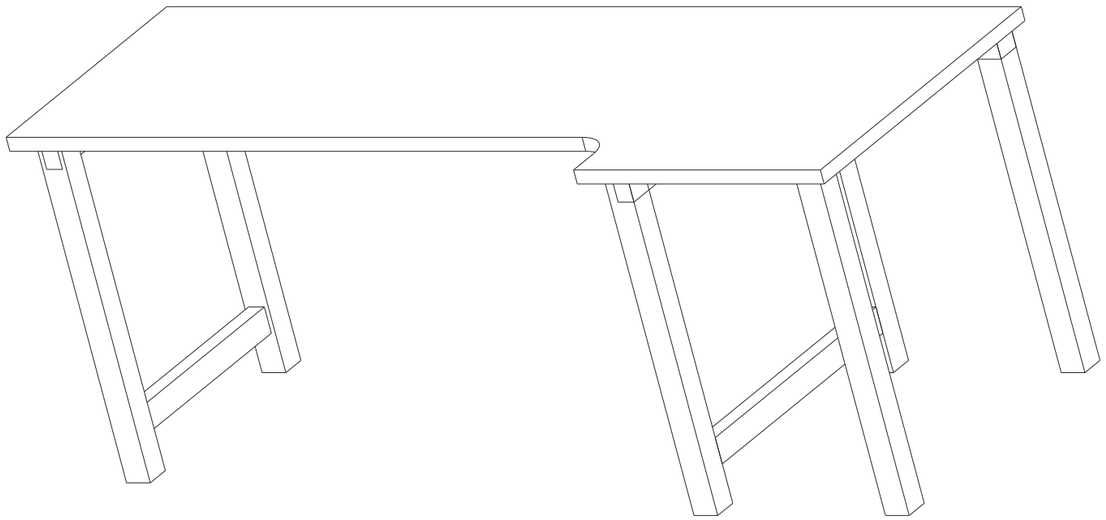

Instructions

- Cut tabletop to 2700 × 800 mm from 40 mm solid or engineered board.
- Lower onto frame. Check overhang is equal on all sides.
- Fix from below through apron top edge using pocket screws or figure-8 clips.
- Allow for wood movement — do not fully glue to frame.

Parts used in this step

- ■ Tabletop 2700×800×40 mm × 1
- ■ Pocket screw 50 mm × 16

5 Step 5 — Fit Slat Mounting Rails

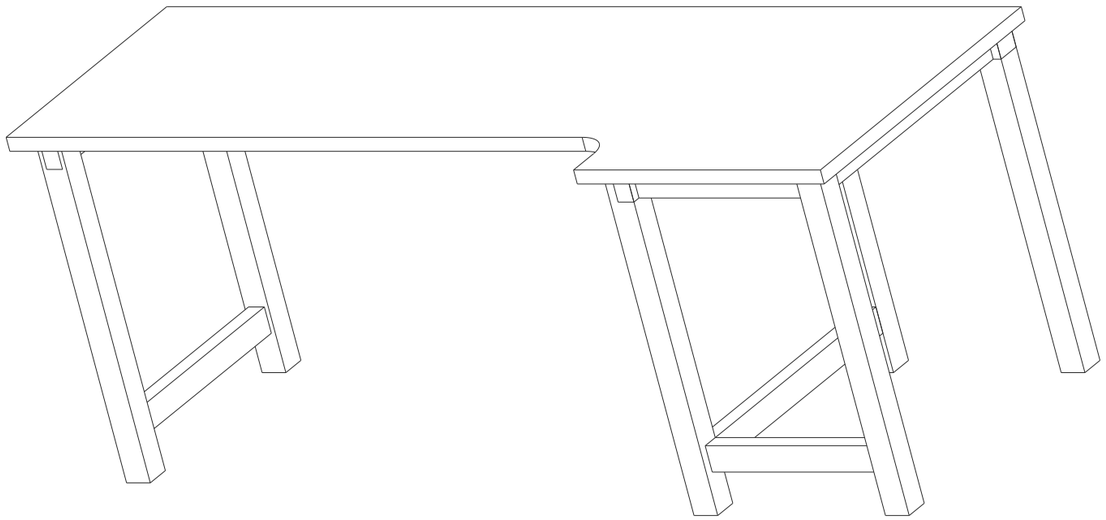

Instructions

- Cut front rails and right-side rail from 50×75 mm timber (see BOM).
- Position rails flush with leg inner faces — check alignment carefully.
- Slat wall sits 15 mm inside the leg outer face — rails go directly behind.
- Fix rails with 2× pocket screws per leg joint.

Parts used in this step

- ■ Slat mounting rail 50×75 mm × 3 (front ×2, right side ×1)
- ■ Pocket screw 50 mm × 12

6 Step 6 — Hang Slat Panels

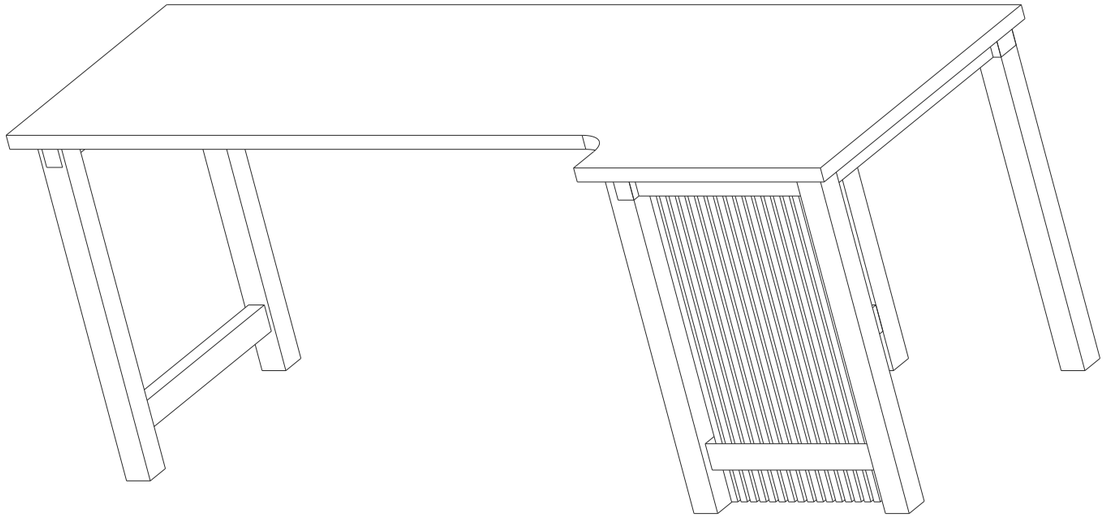

Instructions

- Cut slats to height from 20×15 mm timber. Float 10 mm above floor.
- Space slats 10 mm apart — use a scrap spacer block for consistency.
- Drive 2× 3.5×35 mm screws per slat end (top and bottom rail).
- Front panel: slats run vertically across X, spaced along X.
- Left side panel: slats run vertically across Y, spaced along Y.

Parts used in this step

- Slat 20×15 mm — see BOM for qty and length
- Wood screw 3.5×35 mm — see BOM for qty

DIMENSIONS & CONSTRUCTION DETAILS

KEY DIMENSIONS & MATERIALS

Overall length:	2700 mm
Overall width (main):	800 mm
Extension depth:	200 mm
Total depth:	1000 mm
Leg height:	970 mm
Tabletop thickness:	40 mm
Overall height:	1010 mm
Legs:	75 × 75 mm solid timber
Stretchers:	50 × 75 mm (at 150 mm from floor)
Aprons:	50 × 75 mm (at 885 mm from floor)
Wall beam:	75 × 75 mm, wall-anchored
Slats:	20 × 15 mm, 10 mm gaps

CONSTRUCTION NOTES — JOINTS & FIXING

1. LEG TO APRON & STRETCHER

2× pocket screws (50 mm) per joint.
Apron flush with leg inner face.
Pre-drill and countersink to avoid splitting.

2. WALL BEAM TO WALL

75×75 mm beam at apron height (885 mm).
M10×120 mm lag screws at 600 mm spacing.
Use rawlplugs / expansion anchors for masonry.

3. SLAT WALL MOUNTING

Two horizontal rails per slat wall (bottom + top).
Slats fixed with 2× 3.5×35 mm screws per rail.
10 mm gap between slats; 10 mm float above floor.

4. TABLETOP

Screwed from below through apron top edge.
Figure-8 clips or pocket screws for wood movement.

PART DRAWING — TABLETOP (L-SHAPED)

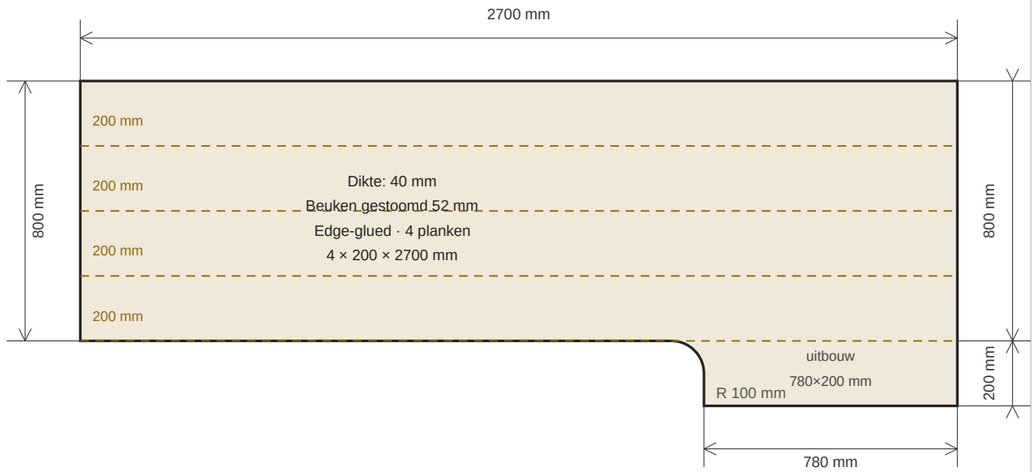

TOP VIEW (schematic, NTS)

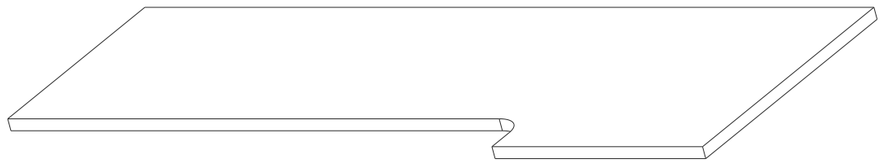

ISOMETRIC VIEW

Dennis Bakhuis — Workshop Workbench v2	Part Drawing — Tabletop	Scale: NTS	Sheet 12 of 14

VERBINDINGSDETAIL — PEN & GAT (M&T)

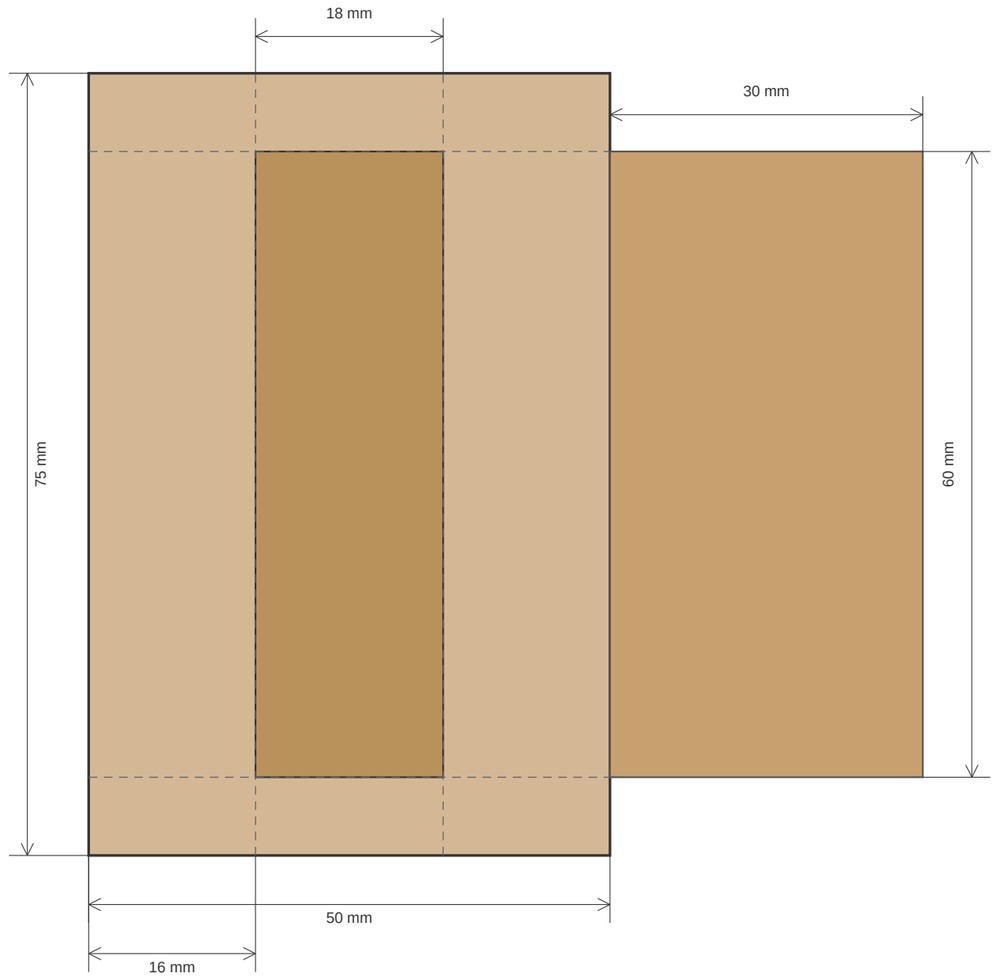

PEN (zijaanzicht eindvlak, Y-Z vlak)

GAT (vooraanzicht pootvlak, X-Z vlak)

- Verlijmen met D3 houtlijm. Pen volledig insmeren, gat droog laten.
- Klemmen: 30 min. Uithardingstijd: 24h voor belasting.
- Freesmachine met rechte frees of gatenboor + beitel.

Dennis Bakhuis — Workshop Workbench v2	Verbindingsdetail — Pen & Gat (M&T)	Scale: NTS	Sheet 13 of 14

TIMBER PARTS — INDIVIDUAL PART DRAWINGS

Leg 75×75mm

Section: 75 × 75 mm
Length: 970 mm
Qty: 6
All structural legs

Stretcher 50×75mm

Section: 50 × 75 mm
Length: 800 mm
Qty: 1
Front-left to wall, bottom rail

Stretcher 50×75mm

Section: 50 × 75 mm
Length: 800 mm
Qty: 1
Ext-left side, bottom rail

Apron 50×75mm

Section: 50 × 75 mm
Length: 800 mm
Qty: 1
Front-left to wall, top rail

Apron 50×75mm

Section: 50 × 75 mm
Length: 950 mm
Qty: 1
Ext-left side, top rail

Wall beam 75×75mm

Section: 2600 × 75 mm
Length: 75 mm
Qty: 1
Wall-mounted back beam; lag-screw to wall

Dennis Bakhuis — Workshop Workbench v2	Timber Parts — Individual Drawings	Scale: NTS	Sheet 14 of 14