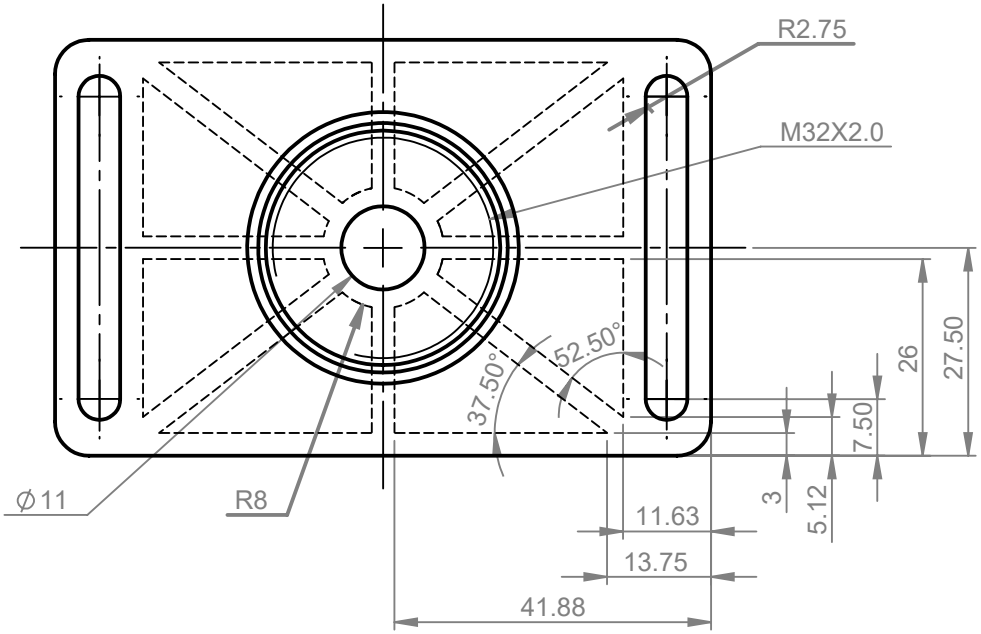

TOP VIEW

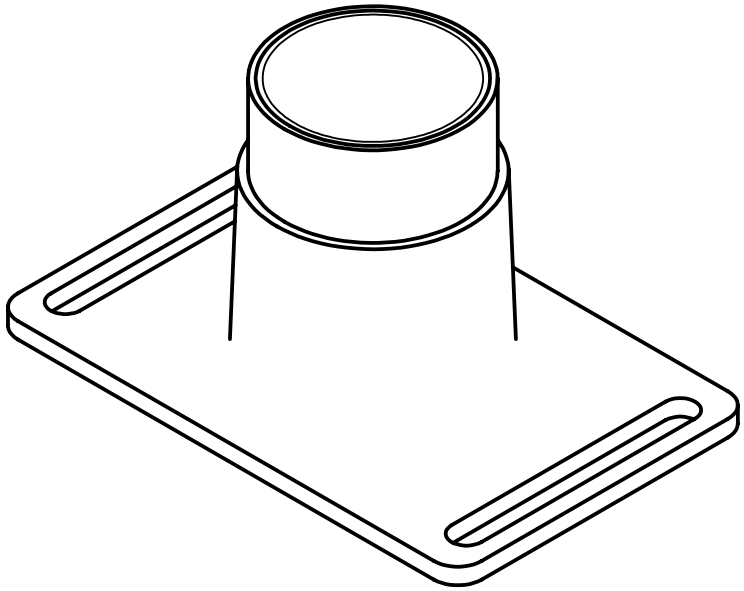

ISOMETRIC VIEW

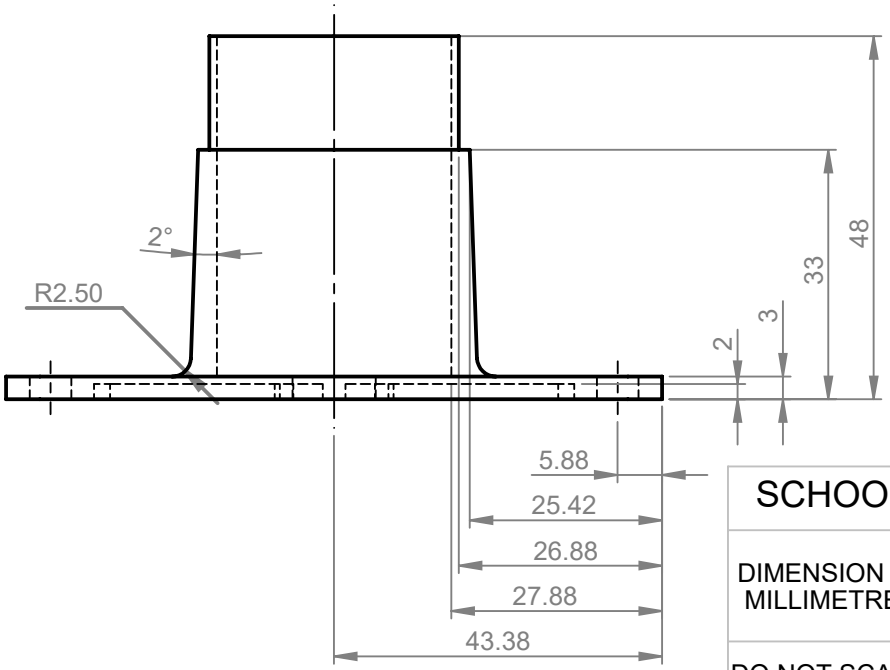

FRONT VIEW

AS1100

SCHOOL OF MECHANICAL AND MANUFACTURING ENGINEERING - UNSW

DIMENSION IN MILLIMETRES	SURFACE FINISH UNLESS NOTED OTHERWISE 1.6	DRAWN BY DAN (Z5206032)			TITLE BODY		
DO NOT SCALE		CHECKED BY ALEXANDER (Z5204704)			DRAWING NUMBER 1		
		APPROVED BY MOHIQUE (Z5203101)			FIRST RELEASE DATE 24/11/2019		
	TOLERANCE UNLESS NOTED OTHERWISE ±0.1	QTY 24000	MATL ABS PLASTIC	SCALE 1:1	REV 1	DATE 24/11/2019	A4

SOLIDWORKS Educational Product. For Instructional Use Only.