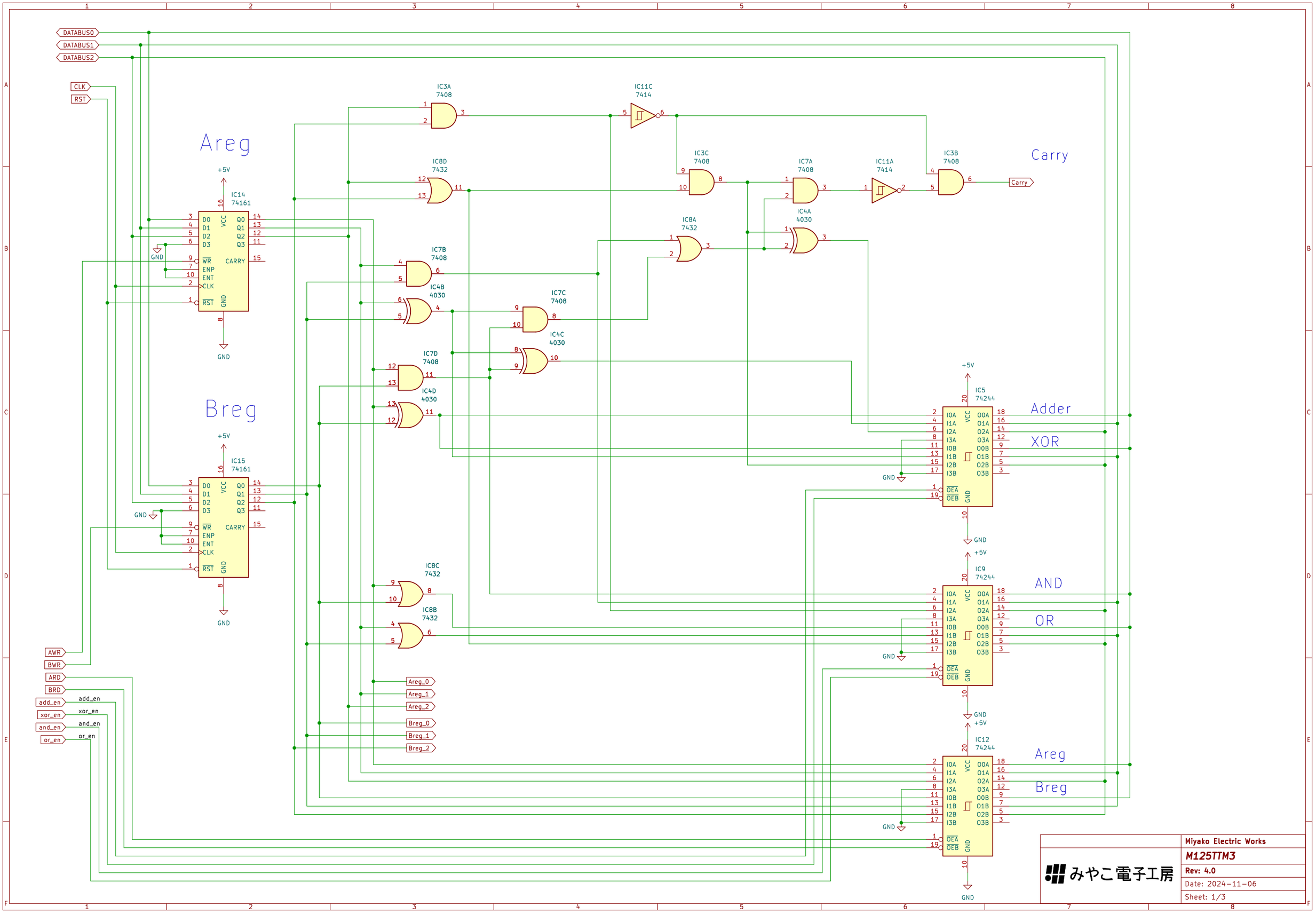
DATABUS0
DATABUS1
DATABUS2
CLK
RST
Areg
Breg
Carry
Adder
XOR
AND
OR
Areg
Breg
IC14
74161
IC15
74161
IC5
74244
IC9
74244
IC12
74244
IC3A
7408
IC3B
7408
IC3C
7408
IC7A
7408
IC7B
7408
IC7C
7408
IC7D
7408
IC8A
7432
IC8B
7432
IC8C
7432
IC8D
7432
IC11A
7414
IC11C
7414
IC4A
4030
IC4B
4030
IC4C
4030
IC4D
4030
+5V
GND
AWR
BWR
ARD
BRD
add_en
xor_en
and_en
or_en
Areg_0
Areg_1
Areg_2
Breg_0
Breg_1
Breg_2
Miyako Electric Works
M125TTM3
Rev: 4.0
Date: 2024-11-06
Sheet: 1/3
みやこ電子工房

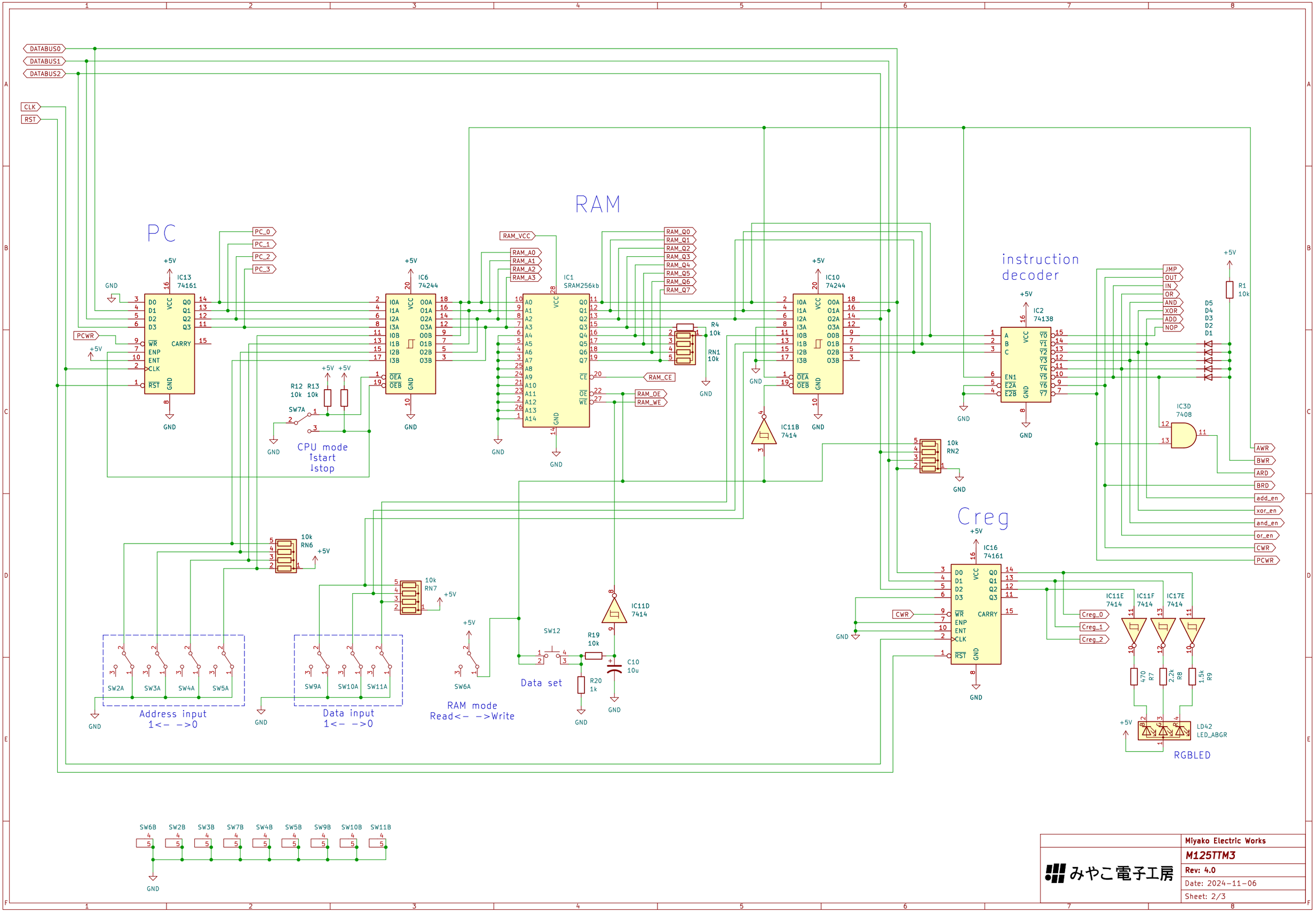
PC
RAM
instruction decoder
Creg
CPU mode
↑start
↓stop
Address input
1<- ->0
Data input
1<- ->0
RAM mode
Read<- ->Write
Data set
RGBLED
IC13 74161
IC6 74244
IC1 SRAM256kb
IC10 74244
IC2 74138
IC16 74161
IC3D 7408
IC11B 7414
IC11D 7414
IC11E 7414
IC11F 7414
IC17E 7414
LD42 LED_ABGR
DATABUS0
DATABUS1
DATABUS2
CLK
RST
PCWR
PC_0
PC_1
PC_2
PC_3
RAM_VCC
RAM_A0
RAM_A1
RAM_A2
RAM_A3
RAM_Q0
RAM_Q1
RAM_Q2
RAM_Q3
RAM_Q4
RAM_Q5
RAM_Q6
RAM_Q7
RAM_CE
RAM_OE
RAM_WE
JMP
OUT
IN
OR
AND
XOR
ADD
NOP
AWR
BWR
ARD
BRD
add_en
xor_en
and_en
or_en
CWR
Creg_0
Creg_1
Creg_2
R1 10k
R4 10k
RN1 10k
RN2 10k
RN6 10k
RN7 10k
R12 10k
R13 10k
R19 10k
R20 1k
C10 10u
470 R7
2.2k R8
1.5k R9
SW7A
SW12
SW2A
SW3A
SW4A
SW5A
SW9A
SW10A
SW11A
SW6A
SW6B
SW2B
SW3B
SW7B
SW4B
SW5B
SW9B
SW10B
SW11B
+5V
GND
Miyako Electric Works
M125TTM3
Rev: 4.0
Date: 2024-11-06
Sheet: 2/3
みやこ電子工房

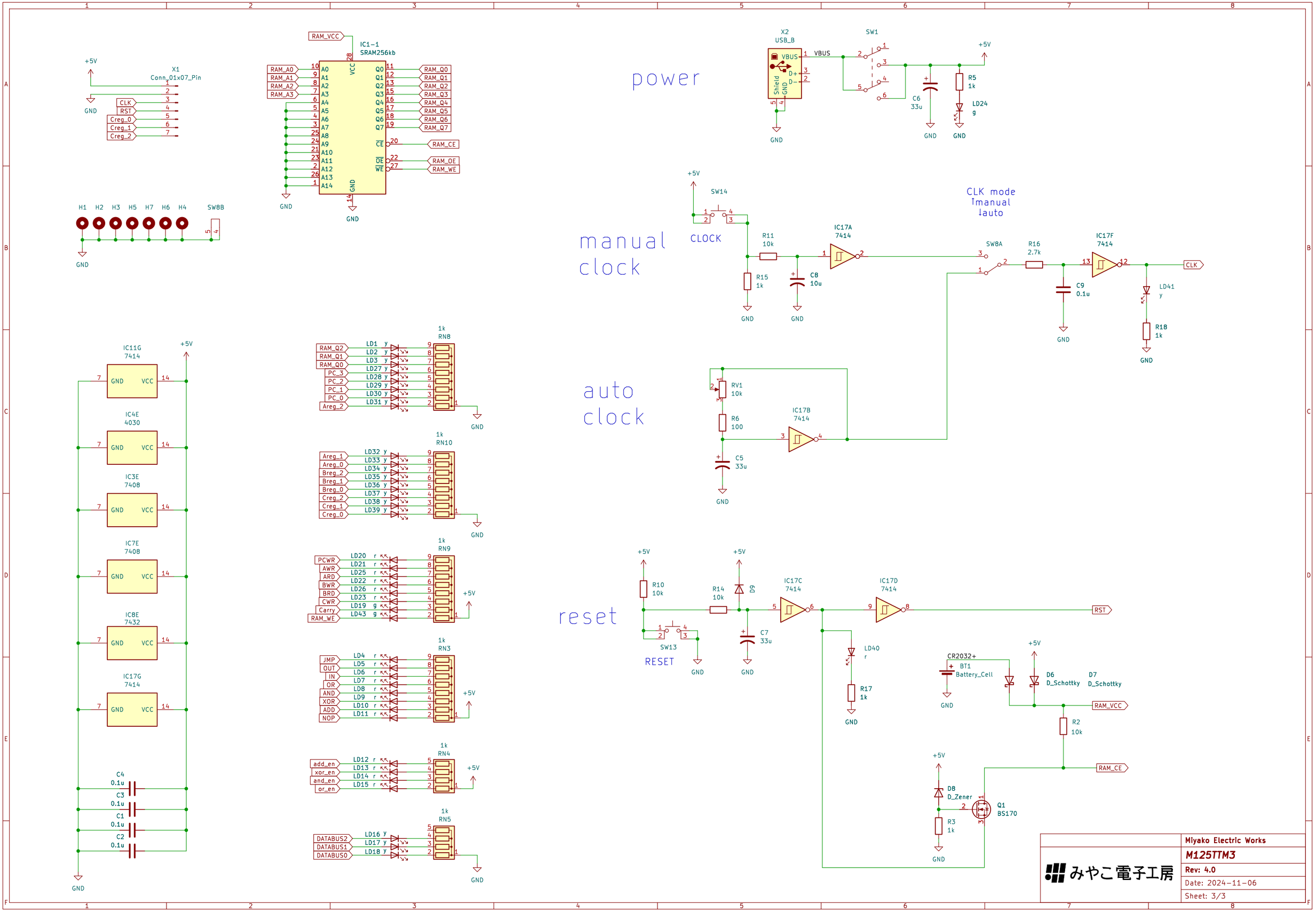
power
manual clock
auto clock
reset
CLK mode
↑manual
↓auto
X1
Conn_01x07_Pin
CLK
RST
Creg_0
Creg_1
Creg_2
IC1-1
SRAM256kb
RAM_VCC
RAM_A0
RAM_A1
RAM_A2
RAM_A3
RAM_Q0
RAM_Q1
RAM_Q2
RAM_Q3
RAM_Q4
RAM_Q5
RAM_Q6
RAM_Q7
RAM_CE
RAM_OE
RAM_WE
H1 H2 H3 H5 H7 H6 H4
SW8B
X2
USB_B
VBUS
SW1
R5
1k
LD24
g
C6
33u
SW14
CLOCK
R11
10k
R15
1k
C8
10u
IC17A
7414
SW8A
R16
2.7k
C9
0.1u
IC17F
7414
LD41
y
R18
1k
RV1
10k
R6
100
C5
33u
IC17B
7414
R10
10k
R14
10k
D9
C7
33u
IC17C
7414
IC17D
7414
SW13
RESET
LD40
r
R17
1k
CR2032+
BT1
Battery_Cell
D6
D_Schottky
D7
D_Schottky
R2
10k
D8
D_Zener
R3
1k
Q1
BS170
IC11G
7414
IC4E
4030
IC3E
7408
IC7E
7408
IC8E
7432
IC17G
7414
C4
0.1u
C3
0.1u
C1
0.1u
C2
0.1u
RN8
RN10
RN9
RN3
RN4
RN5
LD1 LD2 LD3 LD27 LD28 LD29 LD30 LD31
LD32 LD33 LD34 LD35 LD36 LD37 LD38 LD39
LD20 LD21 LD25 LD22 LD26 LD23 LD19 LD43
LD4 LD5 LD6 LD7 LD8 LD9 LD10 LD11
LD12 LD13 LD14 LD15
LD16 LD17 LD18
PCWR
AWR
ARD
BWR
BRD
CWR
Carry
JMP
OUT
IN
OR
AND
XOR
ADD
NOP
add_en
xor_en
and_en
or_en
DATABUS2
DATABUS1
DATABUS0
Areg_2
Areg_1
Areg_0
Breg_2
Breg_1
Breg_0
PC_3
PC_2
PC_1
PC_0
Miyako Electric Works
M125TTM3
Rev: 4.0
Date: 2024-11-06
Sheet: 3/3
みやこ電子工房