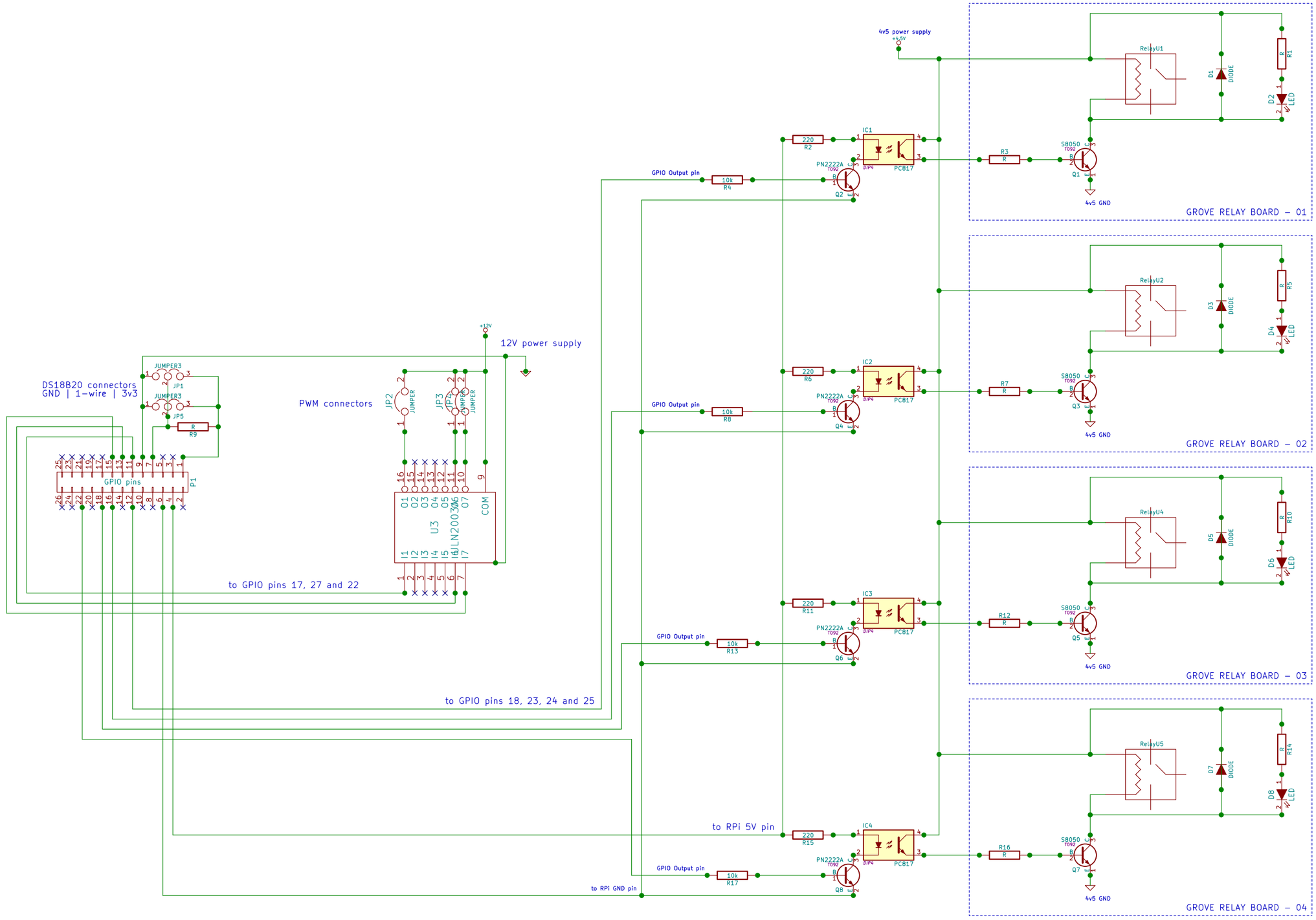

dentex		
Sheet: /		
File: KiCad.sch		
Title: Acquarium Controller		
Size: A3	Date: 01 ott 2014	**Rev:**
KiCad E.D.A. kicad (2014-jul-16 BZR unknown)-product		Id: 1/1