## Table of Contents


| | |
|---|---|
| 1 | TITLE PAGE |
| 2 | BLOCK DIAGRAM |
| 3 | K66F MCU |
| 4 | OpenSDA INTERFACE |
| 5 | ARDUINO SHIELDS & COMBO SENSOR |
| 6 | SD CARD/RF-WIFI/BLUETOOTH/AUDIO |
| 7 | RMII |


## Revisions & Change Log

| Rev | Description | Date | Approved |
|---|---|---|---|
| X1 | Initial Draft | 04/07/15 | M. Hunt |
| A | Remove SW4 | 09/15/15 | M. Hunt |
| B | Modify USB | 11/17/15 | M. Hunt |
| C | | | |
| D | | | |
| E | | | |
| F | | | |

# FREEDOM K66F


freescale

Automotive, Industrial & Multi-Market Solutions Group
6501 William Cannon Drive West Austin, TX 78735-8598


ICAP Classification: FCP: FIUO: PUBI: X

| | | | |
|---|---|---|---|
| Designer: M. Hunt | Drawing Title: FRDM-K66F | | |
| Drawn by: AVD | Page Title: TITLE PAGE | | |
| Approved: M. Hunt | Size C | Document Number SCH-28682 \| PDF: SPF-28682 | Rev B |
| | Date: Tuesday, November 17, 2015 | Sheet 1 of 7 | |

1. Unless Otherwise Specified:
   All resistors are in ohms, most are 1%, 1/10 Watt. Otherwise are 5%, 1/8 Watt.
   All capacitors are in uF, some are 10% or 20%
   All voltages are DC
   All polarized capacitors are tantalum

2. Interrupted lines coded with the same letter or letter combinations are electrically connected.

3. Device type number is for reference only. The number varies with the manufacturer.

4. Special signal usage:
   _B Denotes - Active-Low Signal
   <> or [] Denotes - Vectored Signals

5. Interpret diagram in accordance with American National Standards Institute specifications, current revision, with the exception of logic block symbology.

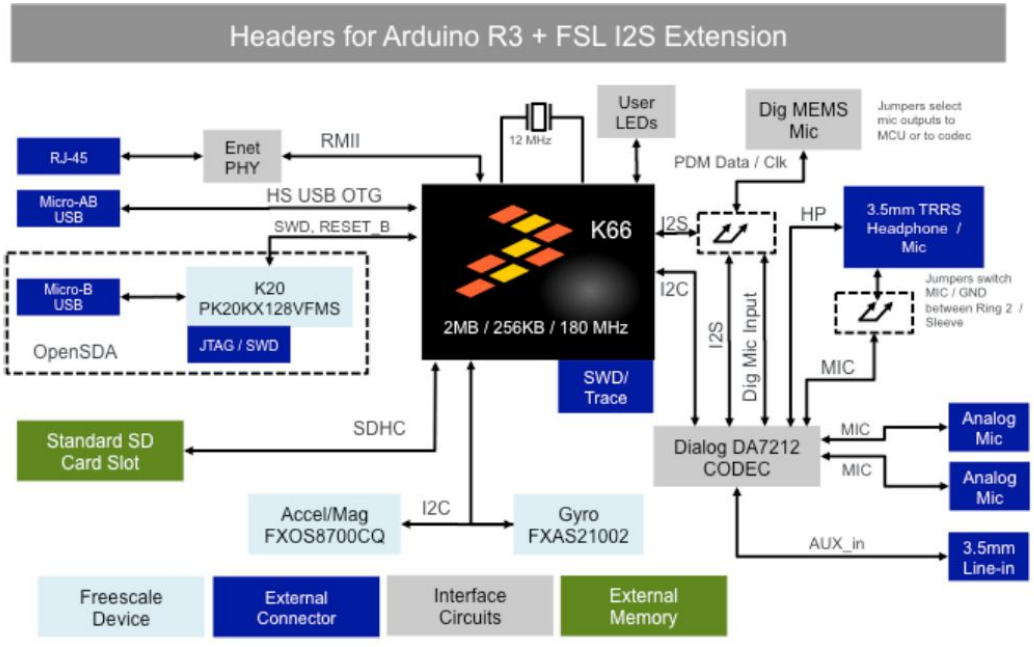


freescale

ICAP Classification: FCP:___ FIUO:X PUBI:___

Drawing Title: FRDM-K66F

Page Title: BLOCK DIAGRAM

| Size | Document Number | Rev |
|---|---|---|
| C | SCH-28682 \| PDF: SPF-28682 | B |

Date: Tuesday, November 17, 2015 Sheet 2 of 7

## K66F USB CONNECTOR

J22 MICRO USB AB 5
P5V0_USB_CONN_VBUS
USB_CONN_DN
USB_CONN_DP
USB_ID
SHELD_K66USB
L5 330 OHM
C45 1.0UF
P5V_K66_USB
K66_MICRO_USB_DN {3}
K66_MICRO_USB_DP {3}
U23 U15 U16 U18
L4 330 OHM

OPTIONAL USB HOST FUNCTIONALITY
P5V_USB P5V_K66_USB
J21 HDR 1X2

P3V3_K66F
R54 0
R52 1K DNP
R53 0 DNP
VREFH
AREF {5}
D4 3.0V DNP
Layout Note:Connect C37 directly between VDDA and VSSA pins
C47 C42 C27 C25 C46 C49 0.1UF
C37 0.1UF
C43 0.1UF
HDR 1X2 TH J23 DNP
VBAT

{5} ADC1_SE23_RC R557 100 ADC1_SE23 {3}
C524 220PF
{5} ADC0_DM0_RC R556 100 ADC0_DM0 {3}
C523 220PF
{5} PTB10_RC R558 100 PTB10 {3}
C525 220PF
{5} PTB11_RC R559 100 PTB11 {3}
C526 220PF
{5} ADC1_SE18_RC R551 100 ADC1_SE18 {3}
C507 220PF

C66 22PF X501 12MHZ C65 22PF R85 1.0M DNP

U14

| | | | |
|---|---|---|---|
| {4,5,7} PTA[0..17] | PTA0 | JTAG_TCLK/SWD_CLK/EZP_CLK | J5 |
| | PTA1 | PTA1/FTM0_CH5 | J6 |
| | PTA2 | JTAG_TDO/TRACE_SWO/EZP_DO/FTM0_CH7 | K6 |
| | PTA3 | JTAG_TMS/SWD_DIO | K7 |
| | PTA4 | PTA4/LLWU_P3/FTM0_CH1/NMI_b | L7 |
| | PTA5 | RMII0_RXER/MII0_RXER | M8 |
| | PTA6 | FTM0_CH3/CLKOUT | J7 |
| | PTA7 | FTM0_CH4/TRACE_D3 | J8 |
| | PTA8 | FTM1_CH0/TRACE_D2 | K8 |
| | PTA9 | FTM1_CH1/TRACE_D1 | L8 |
| | PTA10 | PTA10/LLWU_P22/(SW3_INT) | M9 |
| | PTA11 | PTA11(LED_RGB_BLUE) | L9 |
| | PTA12 | RMII0_RXD1/MII0_RXD1 | K9 |
| | PTA13 | RMII0_RXD0/MII0_RXD0 | J9 |
| | PTA14 | RMII0_CRS_DV/MII0_RXDV | L10 |
| | PTA15 | RMII0_TXEN/MII0_TXEN | L11 |
| | PTA16 | RMII0_TXD0/MII0_TXD0 | K10 |
| | PTA17 | RMII0_TXD1/MII0_TXD1 | K11 |
| | | | M12 |
| | | | M11 |
| {5} PTA[25..29] | PTA25 | PTA25/CMP3_IN5 | K12 |
| | PTA26 | PTA26/FB_A27 | J12 |
| | PTA27 | PTA27/FB_A26 | J11 |
| | PTA28 | PTA28(Sensor_INT) | J10 |
| | PTA29 | PTA29(Sensor_INT) | H12 |
| | | | H11 |
| {5,7} PTB[0..11] | PTB0 | RMII0_MDIO/MII0_MDIO | H10 |
| | PTB1 | RMII0_MDC/MII0_MDC | H9 |
| | PTB2 | ADC0_SE12/I2C0_SCL | G12 |
| | PTB3 | ADC0_SE13/I2C0_SDA | G11 |
| | PTB4 | PTB4/ADC1_SE10 | G10 |
| | PTB5 | PTB5/ADC1_SE11 | G9 |
| | PTB6 | PTB6/ADC1_SE12 | F12 |
| | PTB7 | PTB7/ADC1_SE13 | F11 |
| | | | F10 |
| | | | F9 |
| | PTB10 | PTB10/ADC1_SE14 | E12 |
| {4,5,6} PTB[16..23] | PTB11 | PTB11/ADC1_SE15 | E11 |
| | PTB16 | PTB16/UART0_Rx | E10 |
| | PTB17 | PTB17/UART0_TX | E9 |
| | PTB18 | PTB18/FTM2_CH0 | D12 |
| | PTB19 | PTB19/FTM2_CH1 | D11 |
| | PTB20 | PTB20(RF/WiFi_CE) | D10 |
| | | | D9 |
| | | | C12 |
| | PTB23 | PTB23/CMP3_OUT | C11 |
| {5,6} PTC[0..18] | PTC0 | PTC0/ADC0_SE14 | B12 |
| | PTC1 | I2S_TXD | B11 |
| | PTC2 | FTM0_CH1/CMP1_IN0/FB_AD12 | A12 |
| | PTC3 | UART1_RX/FTM0_CH2/CLKOUT | A11 |
| | PTC4 | UART1_TX/FTM0_CH3/FB_AD11 | A9 |
| | PTC5 | PTC5/I2S0_RXD0/FB_AD10/FTM0_CH2 | D8 |
| | PTC6 | PTC6/LLWU_P10/FB_AD9/I2S0_MCLK | C8 |
| | PTC7 | USB0_SOF_OUT/I2S0_RX_FS/FB_AD8 | B8 |
| | PTC8 | PTC8/FTM3_CH4/ADC1_SE4b/ | A8 |
| | PTC9 | PTC9(LED_RGB_RED) | D7 |
| | PTC10 | I2C1_SCL/FB_AD6 | C7 |
| | PTC11 | I2C1_SDA/ADC1_SE7b/FB_RW_b | B7 |
| | PTC12 | PTC12/FB_AD27 | A7 |
| | PTC13 | PTC13(SENSOR_INT2) | D6 |
| | PTC14 | K66F_UART4_RX | C6 |
| | PTC15 | K66F_UART4_TX | B6 |
| | PTC16 | PTC16/ENET0_1588_TMR0 | A6 |
| | PTC17 | PTC17(SENSOR_INT1) | D5 |
| | PTC18 | PTC18(RF/WiFi IRQ) | C5 |
| | | | B5 |

PTA0/JTAG_TCLK/SWD_CLK/EZP_CLK/TSI0_CH1/UART0_CTS/UART0_COL/FTM0_CH5/LPUART0_CTS
PTA1/JTAG_TDI/EZP_DI/TSI0_CH2/UART0_RX/FTM0_CH6/I2C3_SDA/LPUART0_RX
PTA2/JTAG_TDO/TRACE_SWO/EZP_DO/TSI0_CH3/UART0_TX/FTM0_CH7/I2C3_SCL/LPUART0_TX
PTA3/JTAG_TMS/SWD_DIO/TSI0_CH4/UART0_RTS/FTM0_CH0/LPUART0_RTS
PTA4/LLWU_P3/NMI/EZP_CS/TSI0_CH5/FTM0_CH1
PTA5/USB0_CLKIN/FTM0_CH2/RMII0_RXER/MII0_RXER/CMP2_OUT/I2S0_TX_BCLK/JTAG_TRST
PTA6/FTM0_CH3/CLKOUT/TRACE_CLKOUT
PTA7/ADC0_SE10/FTM0_CH4/RMII0_MDIO/MII0_MDIO/TRACE_D3
PTA8/ADC0_SE11/FTM1_CH0/RMII0_MDC/MII0_MDC/FTM1_QD_PHA/TPM1_CH0/TRACE_D2
PTA9/FTM1_CH1/MII0_RXD3/FTM1_QD_PHB/TPM1_CH1/TRACE_D1
PTA10/LLWU_P22/FTM2_CH0/MII0_RXD2/FTM2_QD_PHA/TPM2_CH0/TRACE_D0
PTA11/LLWU_P23/FTM2_CH1/MII0_RXCLK/I2C2_SDA/FTM2_QD_PHB/TPM2_CH1
PTA12/CMP2_IN0/CAN0_TX/FTM1_CH0/RMII0_RXD1/MII0_RXD1/I2C2_SCL/I2S0_TXD0/FTM1_QD_PHA/TPM1_CH0
PTA13/LLWU_P4/CMP2_IN1/CAN0_RX/FTM1_CH1/RMII0_RXD0/MII0_RXD0/I2C2_SDA/I2S0_TX_FS/FTM1_QD_PHB/TPM1_CH1
PTA14/SPI0_PCS0/UART0_TX/RMII0_CRS_DV/MII0_RXDV/I2C2_SCL/I2S0_RX_BCLK/I2S0_TXD1
PTA15/CMP3_IN1/SPI0_SCK/UART0_RX/RMII0_TXEN/MII0_TXEN/I2S0_RXD0
PTA16/CMP3_IN2/SPI0_SOUT/UART0_CTS/UART0_COL/RMII0_TXD0/MII0_TXD0/I2S0_RX_FS/I2S0_RXD1
PTA17/ADC1_SE17/SPI0_SIN/UART0_RTS/RMII0_TXD1/MII0_TXD1/I2S0_MCLK
PTA18/EXTAL0/FTM0_FLT2/FTM_CLKIN0/TPM_CLKIN0
PTA19/XTAL0/FTM1_FLT0/FTM_CLKIN1/LPTMR0_ALT1/TPM_CLKIN1
PTA24/CMP3_IN4/MII0_TXD2/FB_A15/SDRAM_D15/FB_A29
PTA25/CMP3_IN5/MII0_TXCLK/FB_A14/SDRAM_D14/FB_A28
PTA26/MII0_TXD3/FB_A13/SDRAM_D13/FB_A27
PTA27/MII0_CRS/FB_A12/SDRAM_D12/FB_A26
PTA28/MII0_TXER/FB_A25
PTA29/MII0_COL/FB_A24

PTB0/LLWU_P5/ADC0_SE8/ADC1_SE8/TSI0_CH0/I2C0_SCL/FTM1_CH0/RMII0_MDIO/MII0_MDIO/SDRAM_CAS/FTM1_QD_PHA/TPM1_CH0
PTB1/ADC0_SE9/ADC1_SE9/TSI0_CH6/I2C0_SDA/FTM1_CH1/RMII0_MDC/MII0_MDC/SDRAM_RAS/FTM1_QD_PHB/TPM1_CH1
PTB2/ADC0_SE12/TSI0_CH7/I2C0_SCL/UART0_RTS/ENET0_1588_TMR0/SDRAM_WE/FTM0_FLT3
PTB3/ADC0_SE13/TSI0_CH8/I2C0_SDA/UART0_CTS/UART0_COL/ENET0_1588_TMR1/SDRAM_CS0/FTM0_FLT0
PTB4/ADC1_SE10/ENET0_1588_TMR2/SDRAM_CS1/FTM1_FLT0
PTB5/ADC1_SE11/ENET0_1588_TMR3/FTM2_FLT0
PTB6/ADC1_SE12/FB_AD23/SDRAM_D23
PTB7/ADC1_SE13/FB_AD22/SDRAM_D22
PTB8/UART3_RTS/FB_AD21/SDRAM_D21
PTB9/SPI1_PCS1/UART3_CTS/FB_AD20/SDRAM_D20
PTB10/ADC1_SE14/SPI1_PCS0/UART3_RX/FB_AD19/SDRAM_D19/FTM0_FLT1
PTB11/ADC1_SE15/SPI1_SCK/UART3_TX/FB_AD18/SDRAM_D18/FTM0_FLT2
PTB16/TSI0_CH9/SPI1_SOUT/UART0_RX/FTM_CLKIN0/FB_AD17/SDRAM_D17/EWM_IN/TPM_CLKIN0
PTB17/TSI0_CH10/SPI1_SIN/UART0_TX/FTM_CLKIN1/FB_AD16/SDRAM_D16/EWM_OUT/TPM_CLKIN1
PTB18/TSI0_CH11/CAN0_TX/FTM2_CH0/I2S0_TX_BCLK/FB_AD15/SDRAM_A23/FTM2_QD_PHA/TPM2_CH0
PTB19/TSI0_CH12/CAN0_RX/FTM2_CH1/I2S0_TX_FS/FB_OE/FTM2_QD_PHB/TPM2_CH1
PTB20/SPI2_PCS0/FB_AD31/SDRAM_D31/CMP0_OUT
PTB21/SPI2_SCK/FB_AD30/SDRAM_D30/CMP1_OUT
PTB22/SPI2_SOUT/FB_AD29/SDRAM_D29/CMP2_OUT
PTB23/SPI2_SIN/SPI0_PCS5/FB_AD28/SDRAM_D28/CMP3_OUT

PTC0/ADC0_SE14/TSI0_CH13/SPI0_PCS4/PDB0_EXTRG/USB_SOF_OUT/FB_AD14/SDRAM_A22/I2S0_TXD1
PTC1/LLWU_P6/ADC0_SE15/TSI0_CH14/SPI0_PCS3/UART1_RTS/FTM0_CH0/FB_AD13/SDRAM_A21/I2S0_TXD0
PTC2/ADC0_SE4b/CMP1_IN0/TSI0_CH15/SPI0_PCS2/UART1_CTS/FTM0_CH1/FB_AD12/SDRAM_A20/I2S0_TX_FS
PTC3/LLWU_P7/CMP1_IN1/SPI0_PCS1/UART1_RX/FTM0_CH2/CLKOUT/I2S0_TX_BCLK
PTC4/LLWU_P8/SPI0_PCS0/UART1_TX/FTM0_CH3/FB_AD11/SDRAM_A19/CMP1_OUT
PTC5/LLWU_P9/SPI0_SCK/LPTMR0_ALT2/I2S0_RXD0/FB_AD10/SDRAM_A18/CMP0_OUT/FTM0_CH2
PTC6/LLWU_P10/CMP0_IN0/SPI0_SOUT/PDB0_EXTRG/I2S0_RX_BCLK/FB_AD9/SDRAM_A17/I2S0_MCLK
PTC7/CMP0_IN1/SPI0_SIN/USB_SOF_OUT/I2S0_RX_FS/FB_AD8/SDRAM_A16
PTC8/ADC1_SE4b/CMP0_IN2/FTM3_CH4/I2S0_MCLK/FB_AD7/SDRAM_A15
PTC9/ADC1_SE5B/CMP0_IN3/FTM3_CH5/I2S0_RX_BCLK/FB_AD6/SDRAM_A14/FTM2_FLT0
PTC10/ADC1_SE6B/I2C1_SCL/FTM3_CH6/I2S0_RX_FS/FB_AD5/SDRAM_A13
PTC11/LLWU_P11/ADC1_SE7B/I2C1_SDA/FTM3_CH7/I2S0_RXD1/FB_RW
PTC12/UART4_RTS/FTM_CLKIN0/FB_AD27/SDRAM_D27/FTM3_FLT0/TPM_CLKIN0
PTC13/UART4_CTS/FTM_CLKIN1/FB_AD26/SDRAM_D26/TPM_CLKIN1
PTC14/UART4_RX/FB_AD25/SDRAM_D25
PTC15/UART4_TX/FB_AD24/SDRAM_D24
PTC16/CAN1_RX/UART3_RX/ENET0_1588_TMR0/FB_CS5/FB_TSIZ1/FB_BE23_16_BLS15_8/SDRAM_DQM2
PTC17/CAN1_TX/UART3_TX/ENET0_1588_TMR1/FB_CS4/FB_TSIZ0/FB_BE31_24_BLS7_0/SDRAM_DQM3
PTC18/UART3_RTS/ENET0_1588_TMR2/FB_TBST/FB_CS2/FB_BE15_8_BLS23_16/SDRAM_DQM1
PTC19/UART3_CTS/ENET0_1588_TMR3/FB_CS3/FB_BE7_0_BLS31_24/SDRAM_DQM0

PTD0/LLWU_P12/SPI0_PCS0/UART2_RTS/FTM3_CH0/FB_ALE/FB_CS1/FB_TS
PTD1/ADC0_SE5B/SPI0_SCK/UART2_CTS/FTM3_CH1/FB_CS0
PTD2/LLWU_P13/SPI0_SOUT/UART2_RX/FTM3_CH2/FB_AD4/SDRAM_A12/I2C0_SCL
PTD3/SPI0_SIN/UART2_TX/FTM3_CH3/FB_AD3/SDRAM_A11/I2C0_SDA
PTD4/LLWU_P14/SPI0_PCS1/UART0_RTS/FTM0_CH4/FB_AD2/SDRAM_A10/EWM_IN/SPI1_PCS0
PTD5/ADC0_SE6B/SPI0_PCS2/UART0_CTS/UART0_COL/FTM0_CH5/FB_AD1/SDRAM_A9/EWM_OUT/SPI1_SCK
PTD6/LLWU_P15/ADC0_SE7B/SPI0_PCS3/UART0_RX/FTM0_CH6/FB_AD0/FTM0_FLT0/SPI1_SOUT
PTD7/CMT_IRO/UART0_TX/FTM0_CH7/SDRAM_CKE/FTM0_FLT1/SPI1_SIN
PTD8/LLWU_P24/I2C0_SCL/LPUART0_RX/FB_A16
PTD9/I2C0_SDA/LPUART0_TX/FB_A17
PTD10/LPUART0_RTS/FB_A18
PTD11/LLWU_P25/SPI2_PCS0/SDHC0_CLKIN/LPUART0_CTS/FB_A19
PTD12/SPI2_SCK/FTM3_FLT0/SDHC0_D4/FB_A20
PTD13/SPI2_SOUT/SDHC0_D5/FB_A21
PTD14/SPI2_SIN/SDHC0_D6/FB_A22
PTD15/SPI2_PCS1/SDHC0_D7/FB_A23

PTE0/ADC1_SE4A/SPI1_PCS1/UART1_TX/SDHC0_D1/TRACE_CLKOUT/I2C1_SDA/RTC_CLKOUT
PTE1/LLWU_P0/ADC1_SE5A/SPI1_SOUT/UART1_RX/SDHC0_D0/TRACE_D3/I2C1_SCL/SPI1_SIN
PTE2/LLWU_P1/ADC1_SE6A/SPI1_SCK/UART1_CTS/SDHC0_DCLK/TRACE_D2
PTE3/ADC1_SE7A/SPI1_SIN/UART1_RTS/SDHC0_CMD/TRACE_D1/SPI1_SOUT
PTE4/LLWU_P2/SPI1_PCS0/UART3_TX/SDHC0_D3/TRACE_D0
PTE5/SPI1_PCS2/UART3_RX/SDHC0_D2/FTM3_CH0
PTE6/LLWU_P16/SPI1_PCS3/UART3_CTS/I2S0_MCLK/FTM3_CH1/USB0_SOF_OUT
PTE7/UART3_RTS/I2S0_RXD0/FTM3_CH2
PTE8/I2S0_RXD1/I2S0_RX_FS/LPUART0_TX/FTM3_CH3
PTE9/LLWU_P17/I2S0_TXD1/I2S0_RX_BCLK/LPUART0_RX/FTM3_CH4
PTE10/LLWU_P18/I2C3_SDA/I2S0_TXD0/LPUART0_CTS/FTM3_CH5/USB_ID
PTE11/I2C3_SCL/I2S0_TX_FS/LPUART0_RTS/FTM3_CH6
PTE12/I2S0_TX_BCLK/FTM3_CH7
PTE24/ADC0_SE17/CAN1_TX/UART4_TX/I2C0_SCL/EWM_OUT
PTE25/LLWU_P21/ADC0_SE18/CAN1_RX/UART4_RX/I2C0_SDA/EWM_IN
PTE26/ENET_1588_CLKIN/UART4_CTS/RTC_CLKOUT/USB0_CLKIN
PTE27/UART4_RTS
PTE28

ADC0_DM0/ADC1_DM3
ADC1_DP0/ADC0_DP3
ADC1_DM0/ADC0_DM3
ADC1_SE16/CMP2_IN2/ADC0_SE22
ADC0_SE16/CMP1_IN2/ADC0_SE21
VREF_OUT/CMP1_IN5/CMP0_IN5/ADC1_SE18
DAC0_OUT/CMP1_IN3/ADC0_SE23
DAC1_OUT/CMP0_IN4/CMP2_IN3/ADC1_SE23

USB0_DP
USB0_DM
USB1_DP
USB1_DM
USB1_VBUS
USB1_VSS
RTC_WAKEUP_B
RESET
EXTAL32
XTAL32
VREFH
VREFL
VREG_OUT
VREG_IN0
VREG_IN1

VSS1 VSS2 VSS3 VSS4 VSS5 VSS6 VSS7 VSS8 VSSA
NC1 NC2 NC3 NC4
MK66FN2M0VMD18

{5} PTD[0..13]
SPI0_PCS0/FTM3_CH0 PTD0
SPI0_SCK/FB_CS0_B PTD1
SPI0_SOUT/FB_AD4 PTD2
SPI0_SIN/FB_AD3 PTD3
PTD4/SPI1_PCS0 PTD4
PTD5/SPI1_SCK PTD5
PTD6/SPI1_SOUT PTD6
PTD7/SPI1_SIN PTD7
PTD8/I2C0_SCL PTD8
PTD9/I2C0_SDA PTD9
SD_CARD_DETECT PTD10
PTD11(SW2_INT) PTD11
PTD12/SDHC0_D4/FB_A20 PTD12
PTD13/SDHC0_D5/FB_A21 PTD13

PTE[0..12]{5,6}
SDHC0_D1 PTE0
SDHC0_D0 PTE1
SDHC0_DCLK PTE2
SDHC0_CMD PTE3
SDHC0_D3 PTE4
SDHC0_D2 PTE5
PTE6(LEDRGB_GREEN) PTE6
I2S_RXD0 PTE7
I2S_RX_WCLK/I2S-RXD1 PTE8
I2S_RX_BCLK PTE9
I2S_TX_WCLK PTE11
I2S_TX_BCLK PTE12
{3,5}PTE9 I2S_RX_BCLK HDR_1X3 J37
{6} I2S_BCLK
{3,5}PTE12 I2S_TX_BCLK
J37: 2-3 default

PTE[24..28]{3,7}
PTE24/ADC0_SE17 PTE24
PTE25/ADC0_SE18 PTE25
PTE26(Ethernet clock) PTE26
R124 33
PTE28(Ethernet_RST) PTE28
{3,5}PTE8 I2S_RX_WCLK HDR_1X3 J38
{6} I2S_WCLK
{3,5}PTE11 I2S_TX_WCLK
J38: 2-3 default

ADC0_DM0 {3}
ADC1_DP0 {3}
ADC1_DM0 {3}
ADC1_SE16 {3}
ADC0_SE16 {3}
ADC1_SE18 {3}
DAC0_OUT {5}
ADC1_SE23 {5}

C59 0.1UF
P5V_K66_USB
C62 0.1UF
R561 10.0K
K66_MICRO_USB_DP {3}
K66_MICRO_USB_DN {3}
TP18 DNP
EXTAL_32.768KHz
RTC_WAKEUP
RST_TGTMCU_B
RST_TGTMCU_B {3,4,5,7}
Y3 32.768KHZ
Place across U14.L1 and U14.K2
VREFH
XTAL_32.768KHz
R560 100K
C81 2.2UF
C33 4.7UF
VREGIN_K66
HDR 1X2 TH J16 DNP
P5V_USB

## RGB LED FEATURE

PTC9 R68 576 LEDRGB_RED D12 P3V3 R88 130
LEDRGB_GREEN R73 270 PTE6
LEDRGB_BLUE R71 270 PTA11
TP13 TP17 TP14
CLV1A-FKB-CJ1M1F1BB7R4S3

## SWD CONNECTOR

P3V3_K66F
J9 HDR 2X5
SWD_SDA_TGTMCU PTA3 {4}
PTA0
TRACE_SWO R80 0 PTA2_JTAG_TDO/TRACE_SWO/EZP_DO/FTM0_CH7
RST_TGTMCU_B {3,4,5,7}

freescale

| | | | |
|---|---|---|---|
| ICAP Classification: | FCP:___ | FIUO: | PUBI: X |
| Drawing Title: | FRDM-K66F | | |
| Page Title: | K66F MCU | | |
| Size C | Document Number SCH-28682 \| PDF: SPF-28682 | | Rev B |
| Date: Tuesday, November 17, 2015 | | Sheet 3 of 7 | |

# OpenSDA Interface

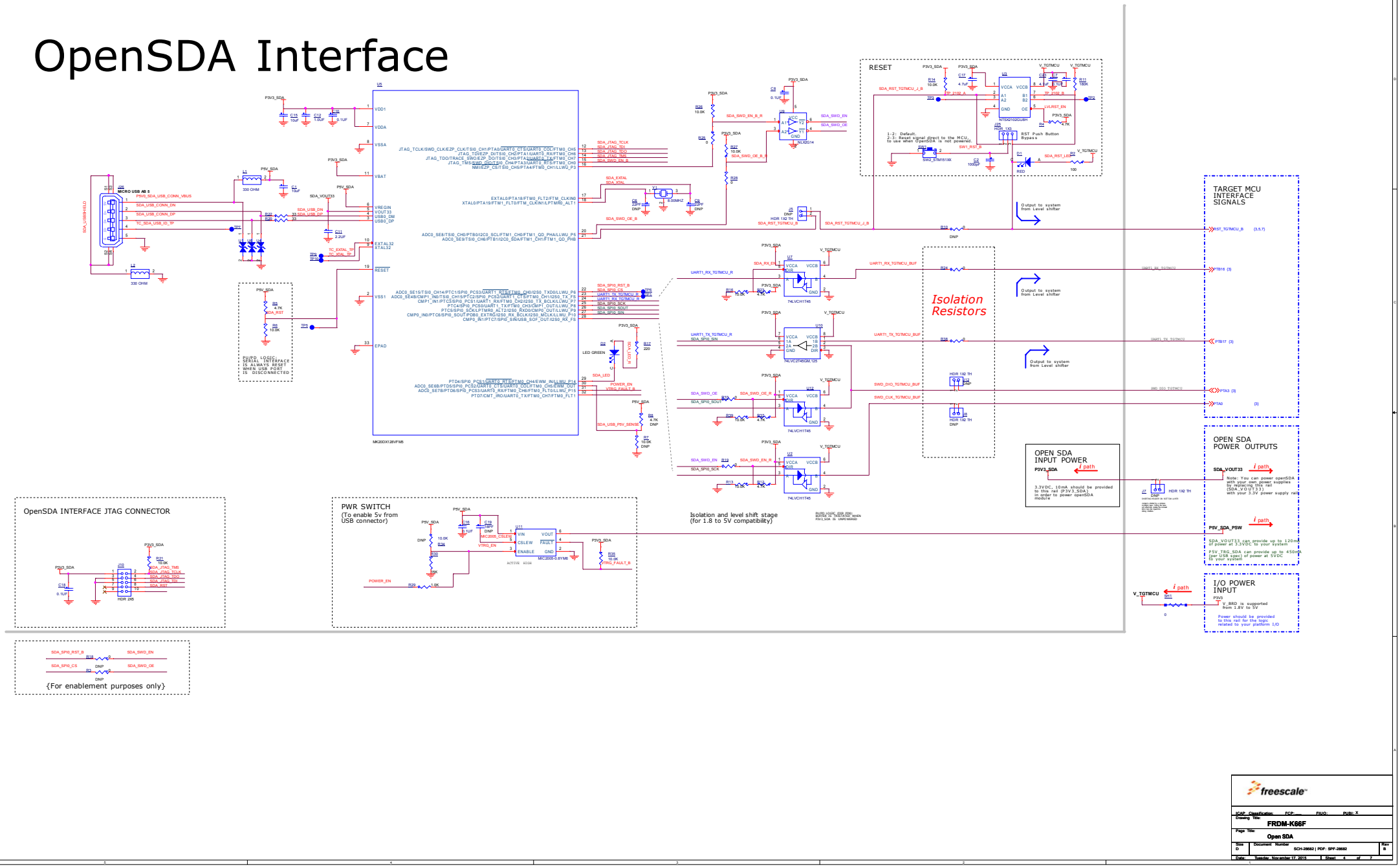


freescale

| | |
|---|---|
| ICAP Classification: | FCP: ___ FSUO: PUBI: X |
| Drawing Title: | FRDM-K66F |
| Page Title: | Open SDA |
| Size: D | Document Number: SCH-28882 \| PDF: SPF-28882 Rev: B |
| Date: Tuesday, November 17, 2015 | Sheet 4 of 7 |

## ARDUINO COMPATIBLE HEADERS

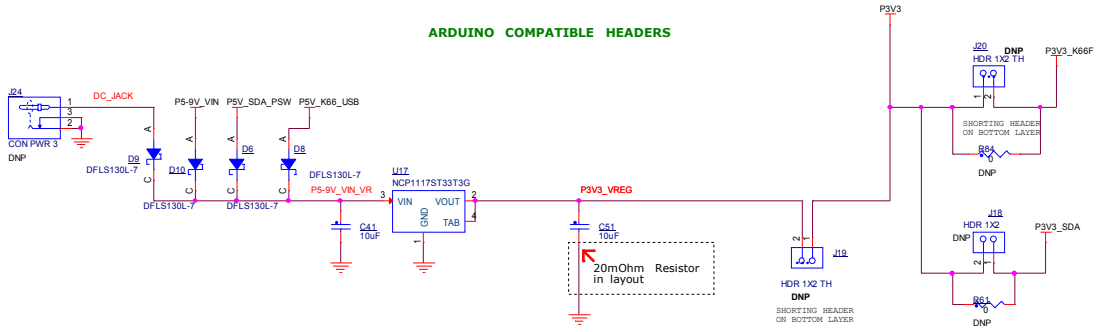


## I2C INERTIAL SENSOR

## ( ACCELEROMETER AND MAGNETOMETER )

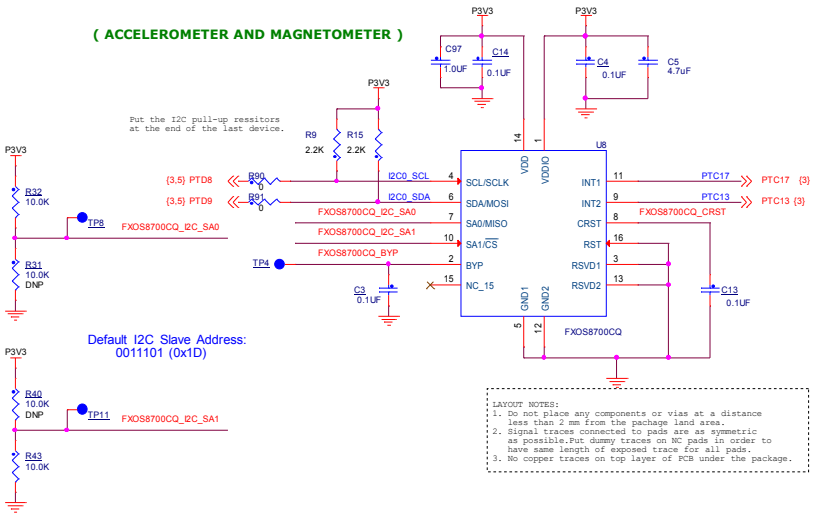


LAYOUT NOTES:
1. Do not place any components or vias at a distance less than 2 mm from the pachage land area.
2. Signal traces connected to pads are as symmetric as possible.Put dummy traces on NC pads in order to have same length of exposed trace for all pads.
3. No copper traces on top layer of PCB under the package.

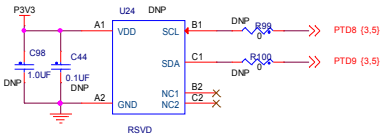


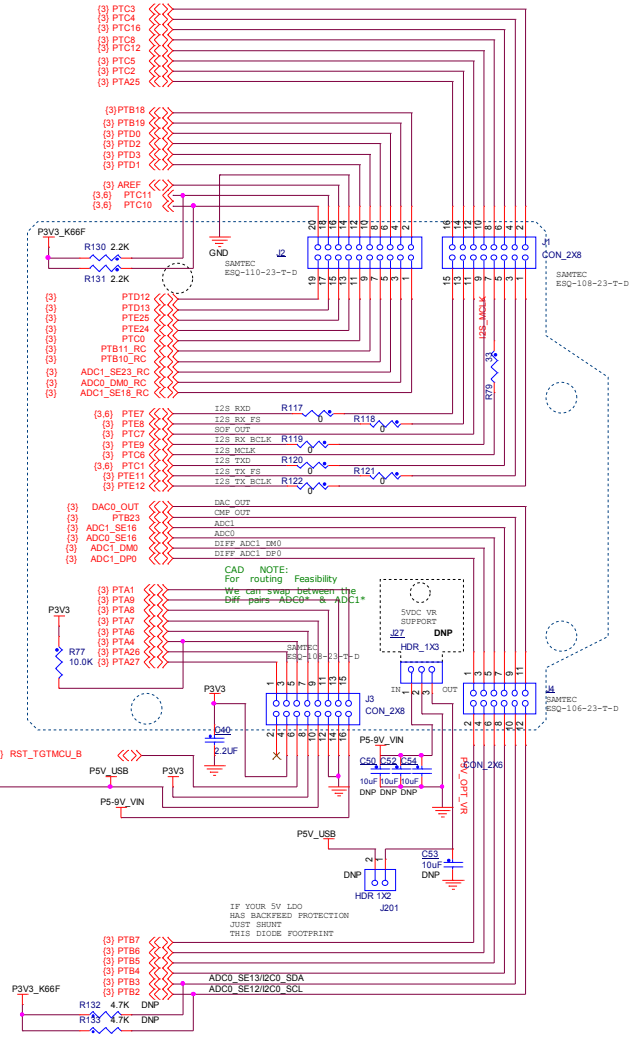


## I2C INERTIAL SENSOR

## ( Gyroscope )

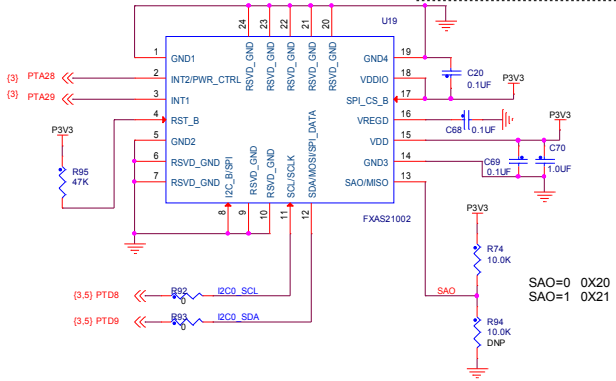


LAYOUT NOTES:
1. Should be no trace routing or vias underneath the device's component package.
2. Do not place any components or vias at a distance less than 2 mm from the pachage land area.
3. Signal traces connected to pads are as symmetric as possible.Put dummy traces on NC pads in order to have same length of exposed trace for all pads.
4. No copper traces on top layer of PCB under the package.

DEBUG GROUND HOOK

TP16 DNP

## INTERRUPTS

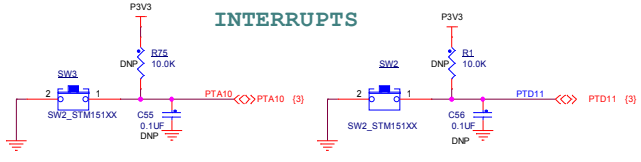


freescale

| | | | |
|---|---|---|---|
| ICAP Classification: | FCP:___ | FIUO: | PUBI: X |
| Drawing Title: | FRDM-K66F | | |
| Page Title: | ARDUINO SHIELDS & COMBO SENSOR | | |
| Size C | Document Number SCH-28682 \| PDF: SPF-28682 | | Rev B |
| Date: Wednesday, November 18, 2015 | Sheet 5 of 7 | | |

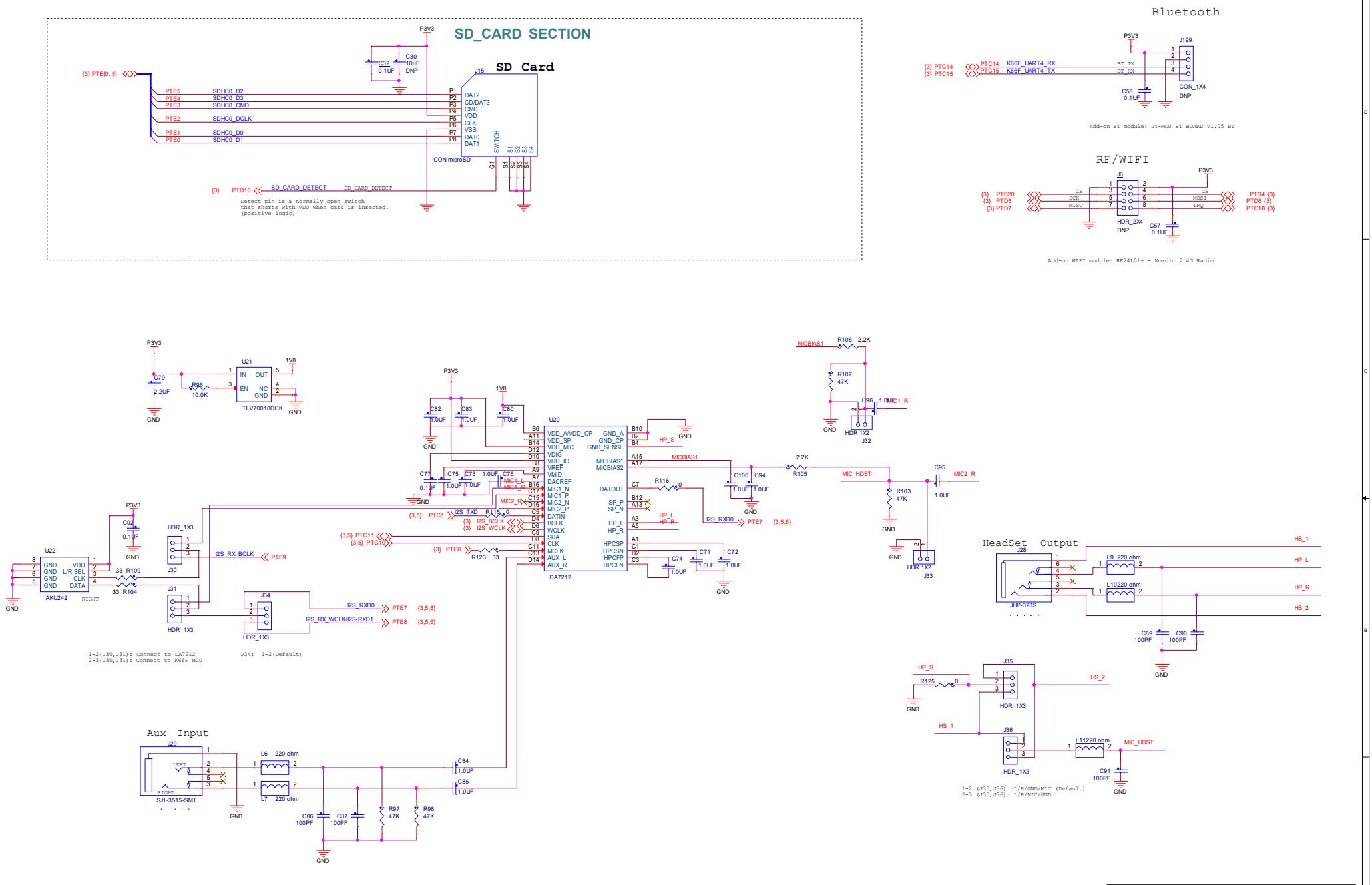


freescale

ICAP Classification: FCP:___ FIUO: PUBI: X

Drawing Title: **FRDM-K66F**

Page Title: **SD CARD / RF - WIFI / BLUETOOTH / AUDIO CODEC**

| Size | Document Number | Rev |
|---|---|---|
| C | SCH-28682 \| PDF: SPF-28682 | B |

Date: Tuesday, November 17, 2015 Sheet 6 of 7

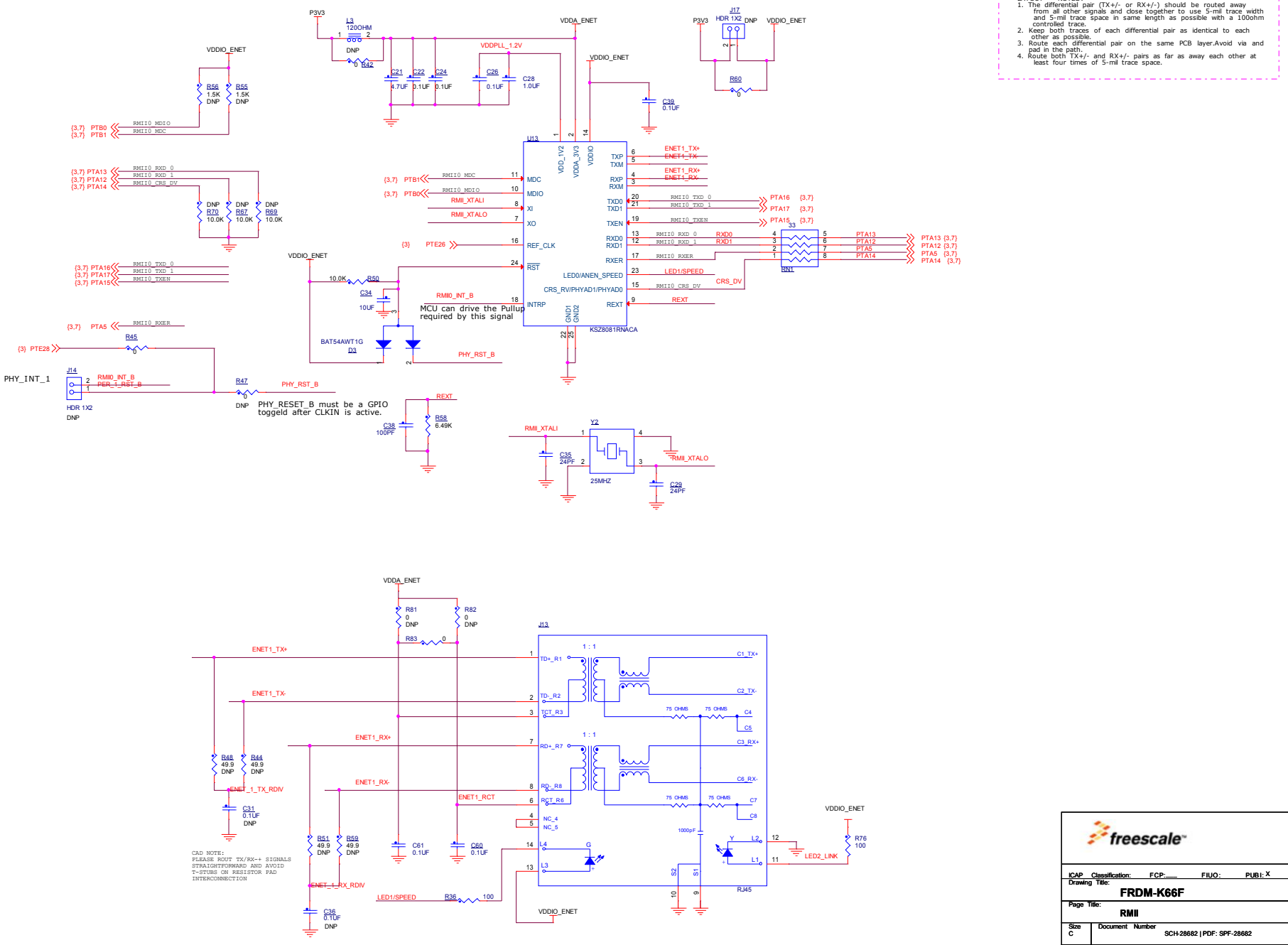
LAYOUT NOTES:
1. The differential pair (TX+/- or RX+/-) should be routed away from all other signals and close together to use 5-mil trace width and 5-mil trace space in same length as possible with a 100ohm controlled trace.
2. Keep both traces of each differential pair as identical to each other as possible.
3. Route each differential pair on the same PCB layer.Avoid via and pad in the path.
4. Route both TX+/- and RX+/- pairs as far as away each other at least four times of 5-mil trace space.
P3V3
VDDA_ENET
VDDIO_ENET
VDDPLL_1.2V
L3
120OHM
DNP
R42
0
C21
4.7UF
C22
0.1UF
C24
0.1UF
C26
0.1UF
C28
1.0UF
C39
0.1UF
J17
HDR 1X2 DNP
R60
0
R56
1.5K
DNP
R55
1.5K
DNP
{3,7} PTB0
{3,7} PTB1
RMII0_MDIO
RMII0_MDC
U13
VDD_1V2
VDDA_3V3
VDDIO
MDC
MDIO
XI
XO
REF_CLK
RST
INTRP
GND1
GND2
TXP
TXM
RXP
RXM
TXD0
TXD1
TXEN
RXD0
RXD1
RXER
LED0/ANEN_SPEED
CRS_RV/PHYAD1/PHYAD0
REXT
KSZ8081RNACA
ENET1_TX+
ENET1_TX-
ENET1_RX+
ENET1_RX-
RMII_XTALI
RMII_XTALO
{3} PTE26
RMII0_INT_B
PHY_RST_B
LED1/SPEED
CRS_DV
RMII0_RXD_0
RMII0_RXD_1
RMII0_CRS_DV
RMII0_TXD_0
RMII0_TXD_1
RMII0_TXEN
RMII0_RXER
PTA16 {3,7}
PTA17 {3,7}
PTA15 {3,7}
PTA13 {3,7}
PTA12 {3,7}
PTA5 {3,7}
PTA14 {3,7}
RN1
33
10.0K
R50
C34
10UF
BAT54AWT1G
D3
MCU can drive the Pullup required by this signal
PHY_INT_1
J14
HDR 1X2
DNP
R45
R47
PHY_RST_B must be a GPIO toggeld after CLKIN is active.
R58
6.49K
C38
100PF
Y2
25MHZ
C35
24PF
C29
24PF
R81
R82
R83
J13
1 : 1
TD+_R1
TD-_R2
TCT_R3
RD+_R7
RD-_R8
RCT_R6
NC_4
NC_5
L4
L3
G
C1_TX+
C2_TX-
C3_RX+
C6_RX-
75 OHMS
C4
C5
C7
C8
1000pF
Y
L2
L1
S2
S1
RJ45
LED2_LINK
R76
100
R48
49.9
DNP
R44
49.9
DNP
C31
0.1UF
DNP
R51
49.9
DNP
R59
49.9
DNP
C61
0.1UF
C60
0.1UF
C36
0.1UF
DNP
ENET1_TX_RDIV
ENET1_RX_RDIV
ENET1_RCT
R36
100
CAD NOTE:
PLEASE ROUT TX/RX-+ SIGNALS STRAIGHTFORWARD AND AVOID T-STUBS ON RESISTOR PAD INTERCONNECTION
freescale
ICAP Classification: FCP:___ FIUO: PUBI: X
Drawing Title: FRDM-K66F
Page Title: RMII
Size C
Document Number SCH-28682 | PDF: SPF-28682
Rev B
Date: Tuesday, November 17, 2015
Sheet 7 of 7