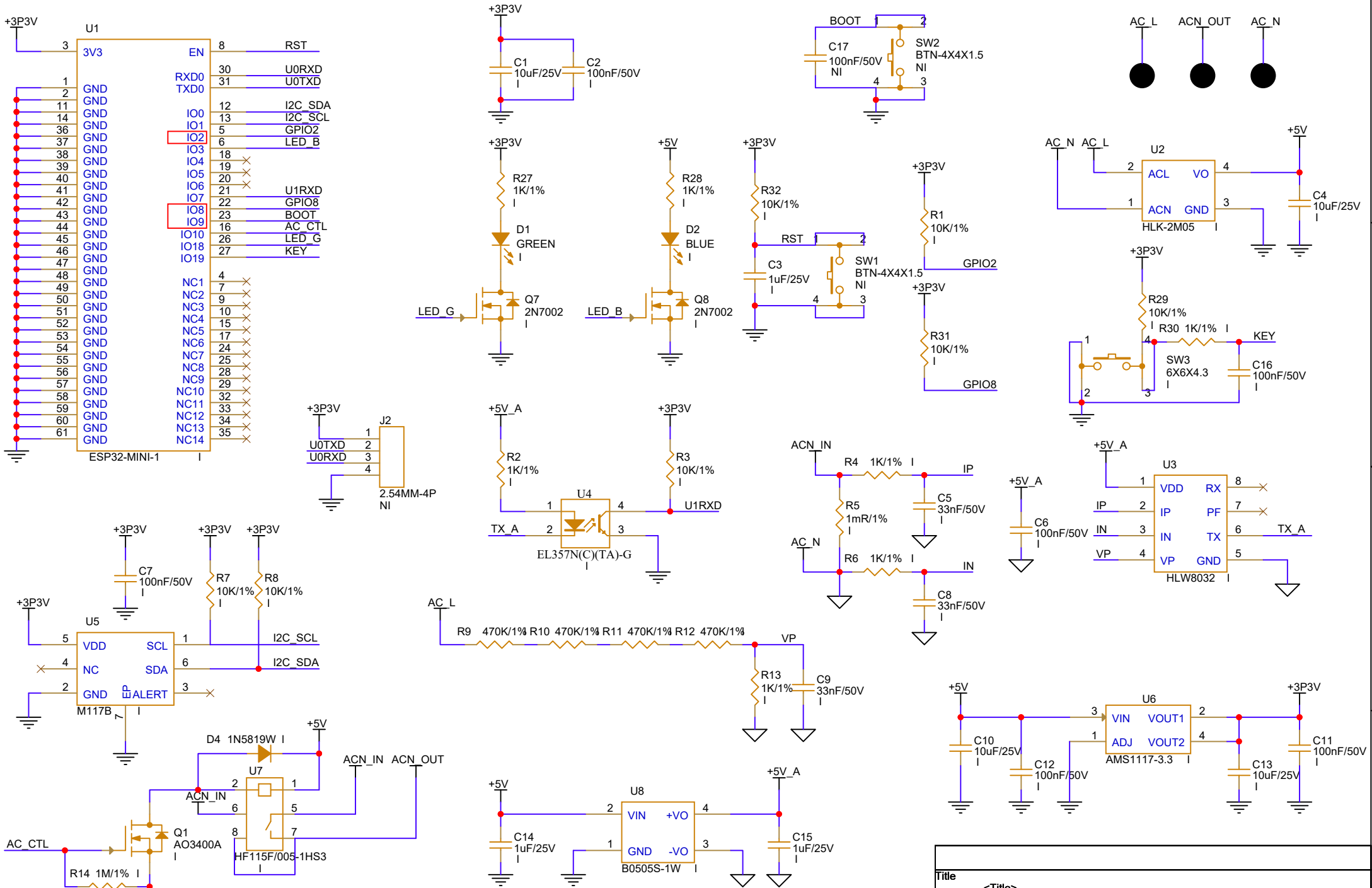
U1
ESP32-MINI-1
3V3
EN
RXD0
TXD0
GND
IO0
IO1
IO2
IO3
IO4
IO5
IO6
IO7
IO8
IO9
IO10
IO18
IO19
NC1
NC2
NC3
NC4
NC5
NC6
NC7
NC8
NC9
NC10
NC11
NC12
NC13
NC14
RST
U0RXD
U0TXD
I2C_SDA
I2C_SCL
GPIO2
LED_B
U1RXD
GPIO8
BOOT
AC_CTL
LED_G
KEY
+3P3V
C1 10uF/25V
C2 100nF/50V
C17 100nF/50V NI
SW2 BTN-4X4X1.5 NI
AC_L
ACN_OUT
AC_N
R27 1K/1%
D1 GREEN
Q7 2N7002
R28 1K/1%
D2 BLUE
Q8 2N7002
+5V
R32 10K/1%
C3 1uF/25V
SW1 BTN-4X4X1.5 NI
R1 10K/1%
R31 10K/1%
U2
HLK-2M05
ACL
ACN
VO
GND
C4 10uF/25V
R29 10K/1%
R30 1K/1%
SW3 6X6X4.3
C16 100nF/50V
J2
2.54MM-4P NI
U0TXD
U0RXD
R2 1K/1%
R3 10K/1%
U4
EL357N(C)(TA)-G
TX_A
U1RXD
ACN_IN
R4 1K/1%
R5 1mR/1%
R6 1K/1%
C5 33nF/50V
C8 33nF/50V
IP
IN
C6 100nF/50V
U3
HLW8032
VDD
RX
PF
TX
VP
C7 100nF/50V
R7 10K/1%
R8 10K/1%
U5
M117B
SCL
SDA
NC
ALERT
R9 470K/1%
R10 470K/1%
R11 470K/1%
R12 470K/1%
R13 1K/1%
C9 33nF/50V
D4 1N5819W
U7
HF115F/005-1HS3
Q1 AO3400A
R14 1M/1%
U8
B0505S-1W
VIN
+VO
-VO
C14 1uF/25V
C15 1uF/25V
U6
AMS1117-3.3
VOUT1
VOUT2
ADJ
C10 10uF/25V
C12 100nF/50V
C13 10uF/25V
C11 100nF/50V
Title
<Title>
Size A4
Document Number
<Doc>
Rev
<RevCo
Date: Saturday, October 28, 2023
Sheet 1 of 1