Precise And Reliable Fluid Transfer

Product Manual

Kamoer Fluid Tech (Shanghai) Co.,Ltd.

Version: A / 2

Product name	Micro peristaltic pump
Product model	KPHM400
Execution date	2022.0 6.01
Manufacturer	Kamoer Fluid Tech (Shanghai) Co., Ltd.

一、 Product Overview

1. Product physical picture

2. Product assembly drawing

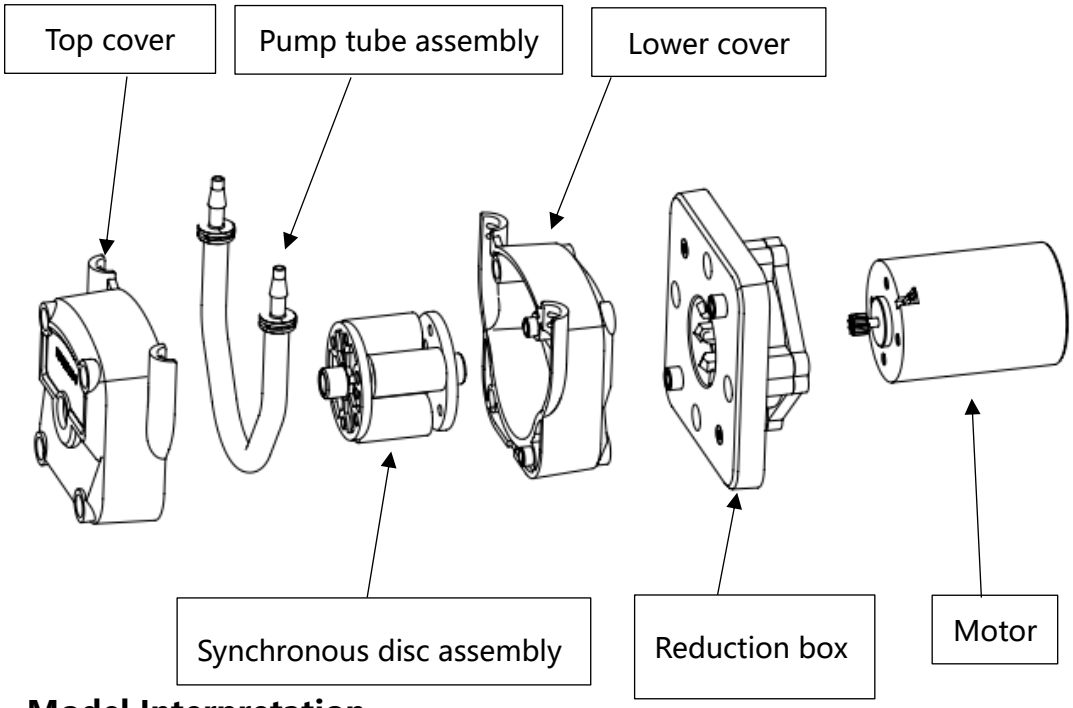

3. Model Interpretation

KPHM400	SV	Null	B	25	Null
model	motor model	slow down	cast	Tube number	Installation method

3.1 Motor model

Brush motor

Brushless motor

Stepper motor

SW 12V DC Brushed 12B 12V DC Brushless ST 24V Stepper Motor

SV 24V DC Brush 24B 24V DC Brushless

3.2 Deceleration

1: 1-stage deceleration, reduction ratio 1:8 0: No deceleration (stepper motor only)

3.3 Tube type

B: BPT pump tube

3.4 Tube number

25#: 4.8mm×8mm

3.5 Installation method

Empty: Standard installation

3.6 Product material

Pump head model	Cover	Output chainring	Gear	Bracket	Joint
KPHM400	PA6	POM	PTE	PTE	PP

4. Performance characteristics, typical applications

4.1 Performance characteristics

- KPHM400 series peristaltic pumps are 3 types of motor-driven peristaltic pumps, 24V/12V motor, different voltage options are available
- Pump tube selection - the pump tube adopts imported BPT (B) tube
- This peristaltic pump can be adapted to common brushed DC, brushless DC and stepper motors
- Compact and cost-effective
- Small installation method - the installation method is through plate fixing and L-shaped sheet metal fixing

■ Transmission mode - The transmission mode is gear transmission, the first stage reduction ratio is 1:8, high reliability and low noise

4.2 Typical applications

Analytical instruments: ion chromatograph, five-category blood analyzer, hypochlorous acid water generator

Detergent delivery: automatic car washing machine

Ion Chromatograph

Automatic Car Wash

Five Classification Blood Analyzer

Hypochlorite water generator

5. Product certification, intellectual property

Appearance design

Utility model

ROHS certification

CE certification

◆ The hose is resistant to liquid media. It is necessary to check chemical compatibility or perform immersion experiments. Improper hose selection may cause the hose to be damaged quickly.

◆ The working environment of the product should not exceed 45 ℃, and the humidity should not exceed 70% (no condensing water). The harsh working environment will cause premature damage to the product.

◆ Fluid spills due to ruptured hoses depend on the fluid medium and your specific application

◆ High overload work may lead to premature product failure

二、 Product Specifications

◆ **KPHM400 DC Brush Product Specifications**

1. Product Size

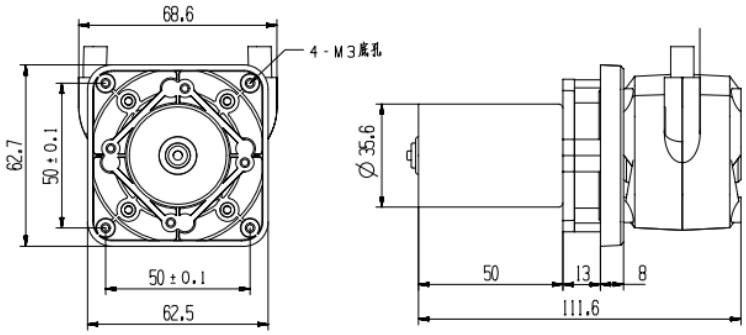

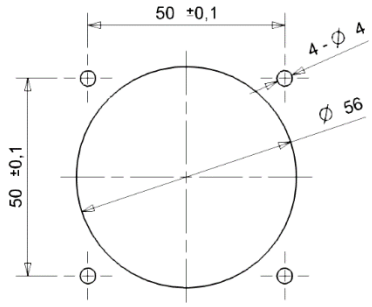

Mounting plate opening size

2. Technical parameter

Project		Technical parameter
Basic parameters	Motor type	DC brush motor
	Flow range	400-500ml/min
	Noise	≤65dB
	Power	10W
	Control method	switch control
	Weight	About 306g
	Rated voltage	12V/24V
	Pump tube life	BPT: 1000h
	Motor life	800 hours
Pump tube flow	**Reference flow (unit: ml/min)**	
	Pump tube code	B25 (2 5 #)
	Inner diameter × outer diameter	Metric : 4.8mm× 8.0mm Imperial: 3 /16 in×5 /16 in
	Pump tube material	BPT
	SV/current: 0.4 A SW/Current: 0.8 A	420ml / min
Precautions	Remark	The above parameters are measured with pure water without pressure under the standard atmospheric pressure at room temperature of 20°C. Actually, there will be certain errors in the flow rate according to different media, different outlet pressures, DC motor speed errors, etc. The data are only for reference. Also can be customized according to customer needs
	Reference noise value	In a quiet room with an ambient noise of 35dB , the product is 50cm away from the noise tester , and the noise is 60dB

3. Motor control

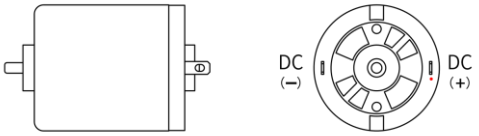

Note: According to the motor wiring diagram, the positive pole of the power supply is connected to positive, and the negative pole is connected to negative.

◆KPHM400 DC brushless product specification

1、 Product Size

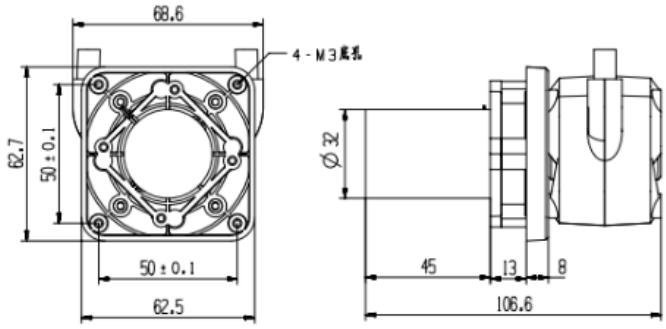

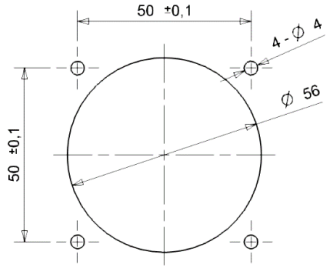

Mounting plate opening size

2、 Technical parameter

Project		Technical parameter
Basic parameters	Motor type	DC brushless motor
	Flow range	400-500ml/min
	Noise	≤65dB
	Power	10W
	Control method	Switch quantity control/PWM speed regulation
	Weight	About 240g
	Rated voltage	12V/24V
	Pump tube life	BPT: 1000h
	Motor life	2000 hours
Pump tube flow	**Reference flow (unit: ml/min)**	
	Pump tube code	B25 (2 5 #)
	Inner diameter ×outer diameter	Metric : 4.8mm× 8.0mm Imperial: 3 /16 in×5 /16 in
	Pump tube material	BPT
	24B/current: 0.4 A 12B/current: 0.8 A	450ml / min
Precautions	Remark	The above parameters are measured with pure water without pressure under the standard atmospheric pressure at room temperature of 20°C. Actually, there will be certain errors in the flow rate according to different media, different outlet pressures, DC motor speed errors, etc. The data are only for reference. Also can be customized according to customer needs
	Reference noise value	In a quiet room with an ambient noise of 35dB , the product is 50cm away from the noise tester , and the noise is 58dB

3、 Brushless Motor Wireless Correspondence Instructions

3.1 The positive pole of the red line power supply, the negative pole of the black line power supply, the white line speed regulation line, the yellow line signal feedback line (to measure the speed), the green line commutation line (reverse in the air, connect the negative pole of the power supply for positive rotation).

3.2 Speed regulation port: PWM and 0-5V speed regulation modes, speed regulation range 13%-100% PWM frequency 10KHZ-30KHZ; amplitude: 5V, duty cycle 0-10% motor does not rotate, 11%-100 % speed regulation range; 0-5V voltage speed regulation, 0-0.5V motor does not rotate, 0.6V-5V speed regulation range.

3.3 Yellow wire speed feedback, connect to oscilloscope probe or host computer. 1 pulse/rev.

3.4 Running at full speed, the red wire and white wire are connected to the positive level of the power supply, and the black wire is connected to the negative electrode

UL1332 Material: PTFE

1-FG-24AWG-yellow signal feedback

2-Vcc-24AWG-red positive power supply

3-SP-24AWG-white Speed Control Port

4-GND-24AWG-black power supply negative

5-F/R-24AWG-green reversing port

◆ KPHM400 stepper product specification

1. Product Size

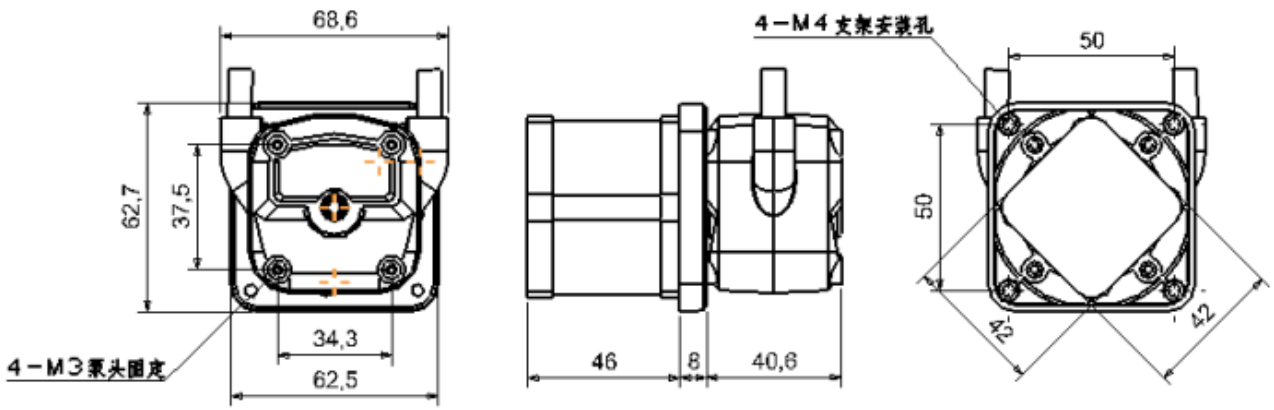

2. Technical parameter

project		Technical parameter
Basic parameters	Motor type	stepper motor
	Flow range	0-700ml/min
	Noise	≤ 60dB
	Power	20W
	Control method	stepper driver
	Weight	About 461g
	Rated voltage	24V
	Pump tube life	BPT: 1000h
	Motor life	6000h
Pump tube flow	**Reference flow (unit: ml/min)**	
	Pump tube code	B25 (2 5 #)
	Inner diameter x outer diameter (mm)	Metric : 4.8mm× 8.0mm Imperial: 3 /16 in×5 /16 in
	Pump tube material	BPT
	350 rpm	410ml / min
Precautions	Remark	The above parameters are measured with pure water without pressure under the standard atmospheric pressure at room temperature of 20°C. Actually, there will be certain errors in the flow rate due to different media, different outlet pressures, and DC motor speed errors. The data are only for reference. Also can be customized according to customer needs
	Reference noise value	In a quiet room with an ambient noise of 35dB , the product is 50cm away from the noise tester , and the noise is 55dB

3. Motor parameters and line color diagram

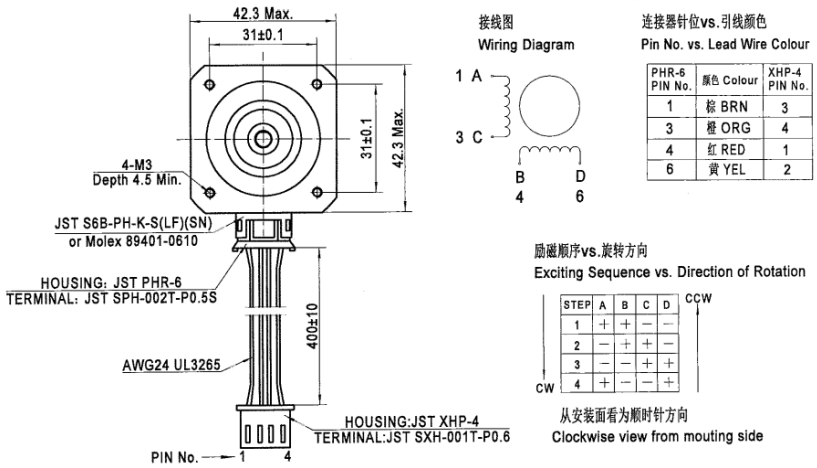

Phase	Resistance	Inductance	Current	Holding torque	Insulation class
2	3.1±10%Ω	4.9±20%mH	1.2A	0.54Nm	B

4. Flow curve

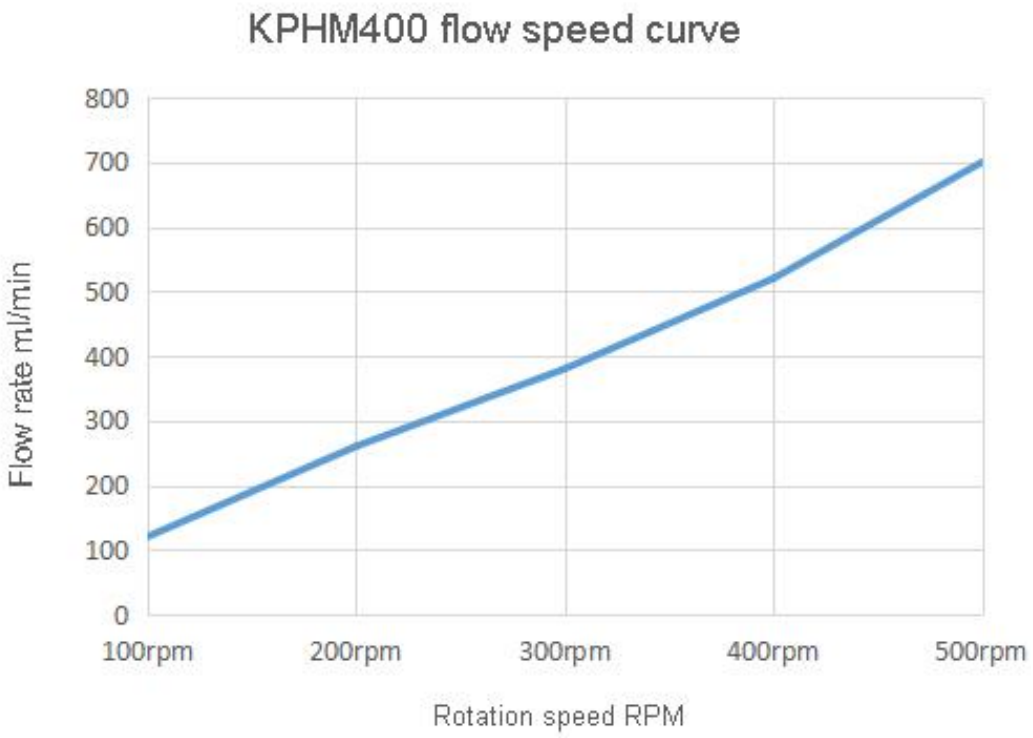

三、 Adapter hose

Pump tube material	Characteristic	Standards compliant	Tube number
BPT tube (B)	Resistant to common chemicals, acid and alkali and oxidation life of more than 1000 h	RoHS FDA	25#

四、 Optional accessories

Name	Specifications		Function introduction
Mounting plate	L shape 70.3×69.5×15mm	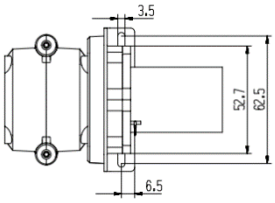	Increase installation methods to meet different customer needs
Straight connector	3/16		External can be connected to 4.8×8 hard pipe or similar hose
Peristaltic Pump Stepper Drive	MODBUS-RTU		It can realize built-in and external potentiometer speed regulation, can realize MODBUS RS485 communication and 0-10V analog speed regulation, realize electric and trigger two start and stop modes, the maximum subdivision is 32, and the drive current can be set (0.7A, 1.2A) , 1.7A, 2.2A, 2.7A, 2.9A, 3.2A, 4.0A)
Pulse generator board + Stepper driver board	2 802 + KMD-42B-P	 	Support clockwise and counterclockwise operation, LED 4- digit digital tube display, various control methods: rotary encoder, foot switch, external analog, 4 85 communication control