COMP0169: Machine Learning for Visual Computing

Understanding CNNs

Lectures will be Recorded

Multiple Classes & Linear Regression

C classes: one-of-c coding (or one-hot encoding)

4 classes, i-th sample is in 3rd class:

$$\mathbf{y}^i = (0, 0, 1, 0)$$

Matrix notation:

$$\mathbf{Y} = \begin{bmatrix} \mathbf{y}^1 \\ \hline \vdots \\ \hline \mathbf{y}^N \end{bmatrix} = \left[\ \mathbf{y}_1 \ \middle| \ \ldots \ \middle| \ \mathbf{y}_C \ \right]$$

where $\mathbf{y}_c = \begin{bmatrix} y_c^1 \\ \vdots \\ y_c^N \end{bmatrix}$

$$\mathbf{W} = \left[\ \mathbf{w}_1 \ \middle| \ \ldots \ \middle| \ \mathbf{w}_C \ \right]$$

Loss function:

$$L(\mathbf{W}) = \sum_{c=1}^{C} (\mathbf{y}_c - \mathbf{X}\mathbf{w}_c)^T (\mathbf{y}_c - \mathbf{X}\mathbf{w}_c)$$

Least squares fit (decouples per class):

$$\mathbf{w}_c^* = \left(\mathbf{X}^T\mathbf{X}\right)^{-1} \mathbf{X}^T \mathbf{y}_c$$

Multiple Classes via SoftMax

Multiple classes & Logistic regression

加了个e

$L(w)$

Soft maximum (softmax) of competing classes:

$$P(y = c|\mathbf{x}; \mathbf{W}) = \frac{\exp(\mathbf{w}_c^T \mathbf{x})}{\sum_{c'=1}^{C} \exp(\mathbf{w}_{c'}^T \mathbf{x})} \doteq g_c(\mathbf{x}, \mathbf{W})$$

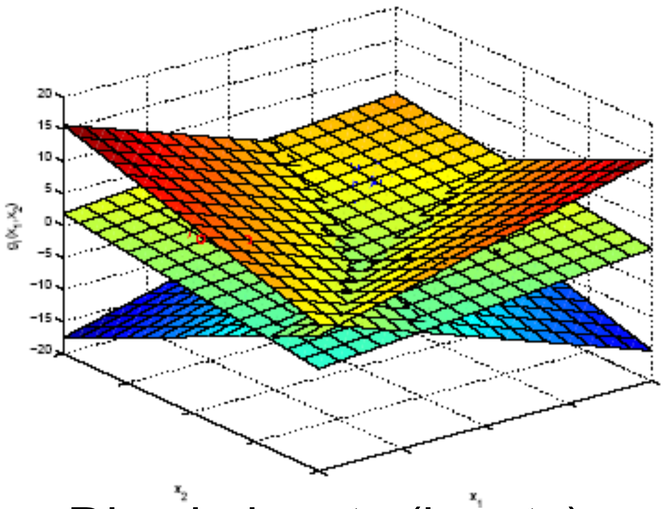

Discriminants (inputs)

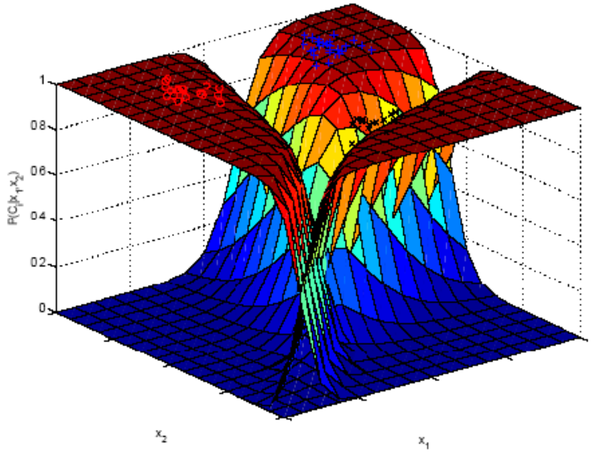

Softmax (outputs)

+ softmax

Neural Networks (Recap)

Gradient Descent Revisited.

$L(w)$

$w - \alpha \nabla_w L(w)$

$\|\nabla L\|$

direction

step size

对应的是所有 data point 全部一遍

SGD

stochastic 随机

$\nabla_w L$ => 随机 data point 计算

momentum

$v_i + \beta v_{i-1}$

v_{i-1}

v_i

CNN Recap

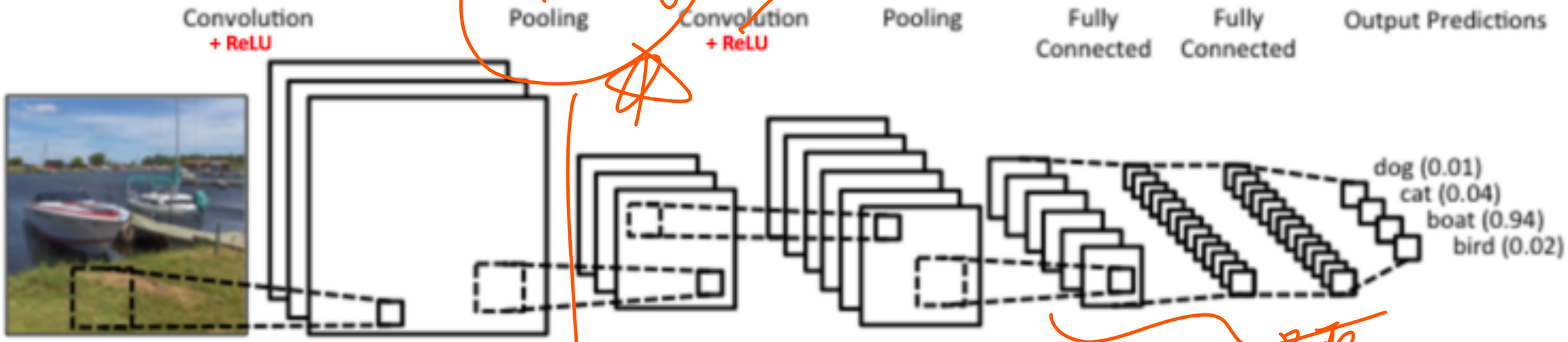

或max
or
≈ average

→ max(0, x)

注力计算量

将前面提取
特征做出决策

Convolutions, Kernels, Activations, Features

Plan for Today

- Visualize filter (kernels)
- Use CNNs as feature maps
- What are the different layers learning?
- Visualize activations at different layers
- Saliency versus Occlusion
- Guided backpropagation
- Gradient Ascent
- Feature Inversion
- DeepDreams

AlexNet

ImageNet Classification with Deep Convolutional Neural Networks

Alex Krizhevsky, University of Toronto, kriz@cs.utoronto.ca
Ilya Sutskever, University of Toronto, ilya@cs.utoronto.ca
Geoffrey E. Hinton, University of Toronto, hinton@cs.utoronto.ca

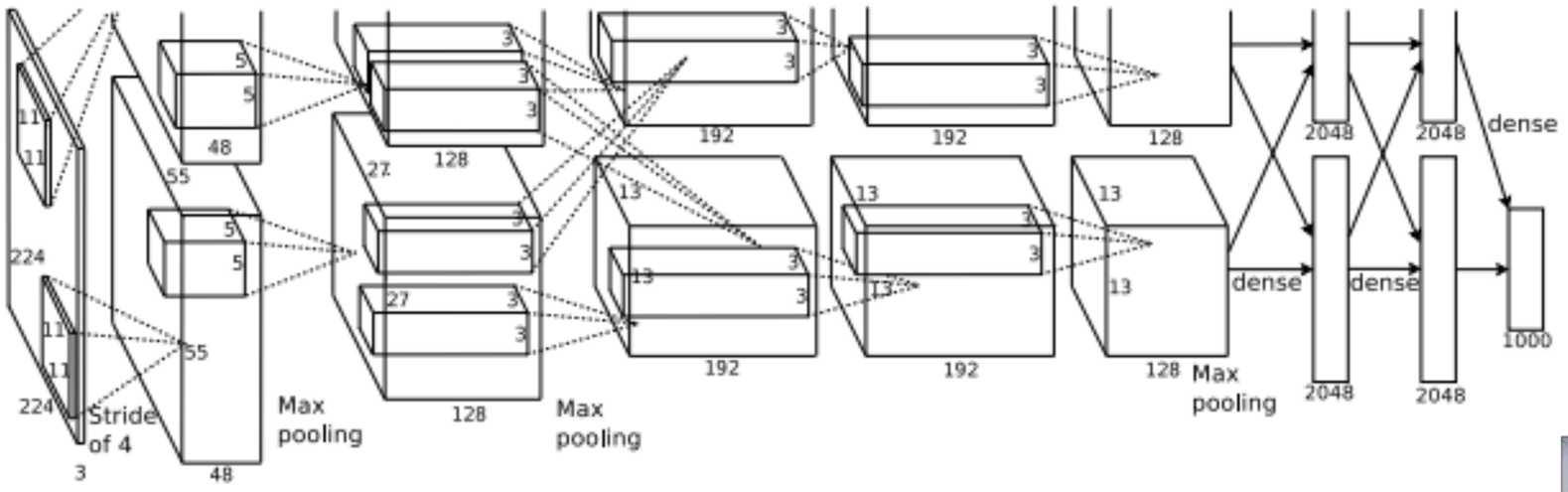

Class scores for 1000 Classes

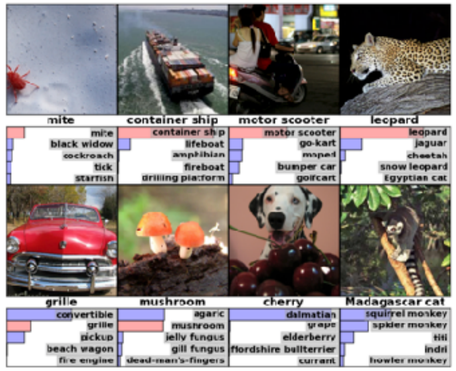

First Layer Filters

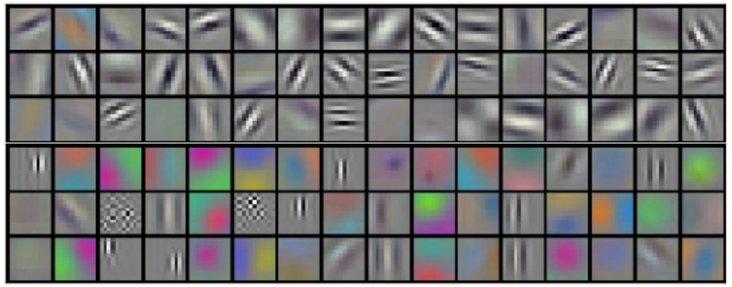

edge

AlexNet
96 x 11x11x3

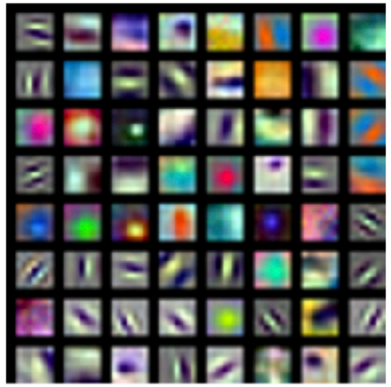

ResNet-18
64 x 7x7x3

ResNet-101
64 x 7x7x3

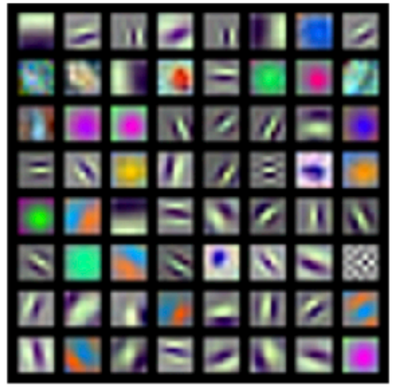

DenseNet-121
64 x 7x7x3

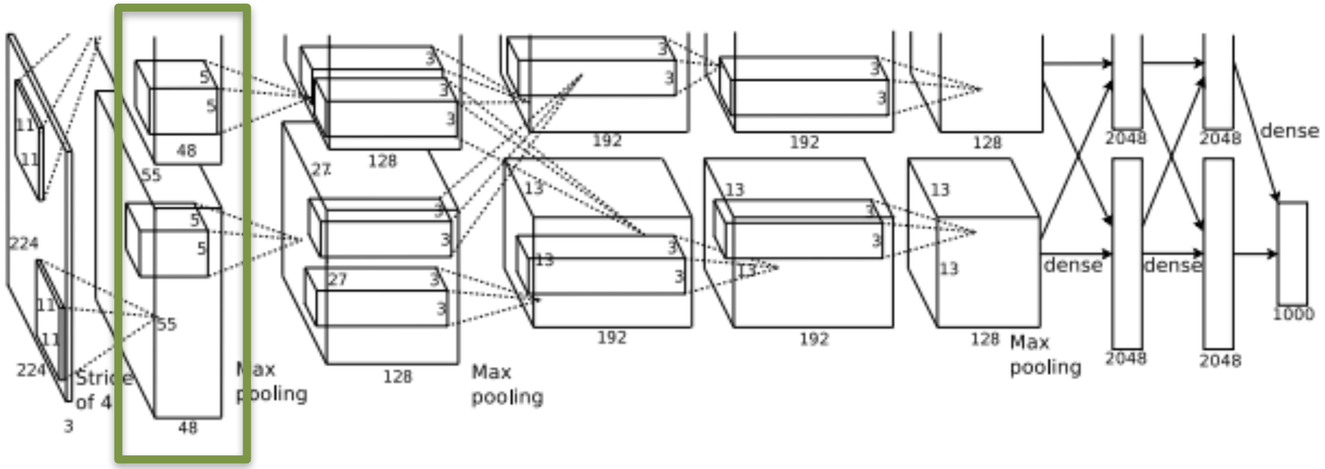

Higher Level Filters

First layer weights: 16 x 3 x 7 x 7

Second layer weights:
20 x 16 x 7 x 7

Third layer weights:
20 x 20 x 7 x 7

Source: ConvNetJS CIFAR-10 example
https://cs.stanford.edu/people/karpathy/convnetjs/demo/cifar10.html

NN in Image Space

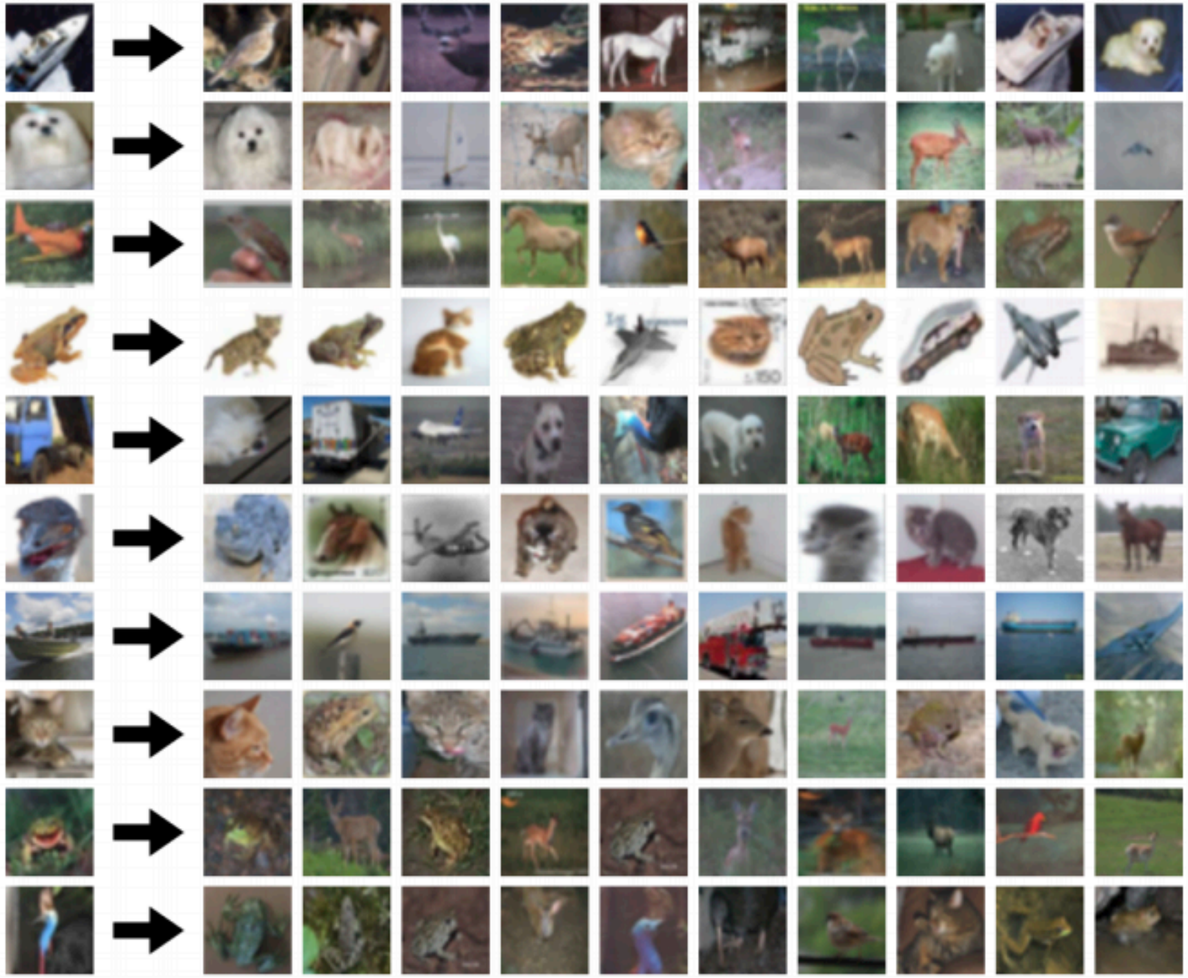

Last Layer

Feature size 2048+2048=4096.

Pretrain network. Run ‘feature extractor’ on many images.
FC7 features.

$$\mathbb{R}^{224\times224\times3} \rightarrow \mathbb{R}^{4096}$$

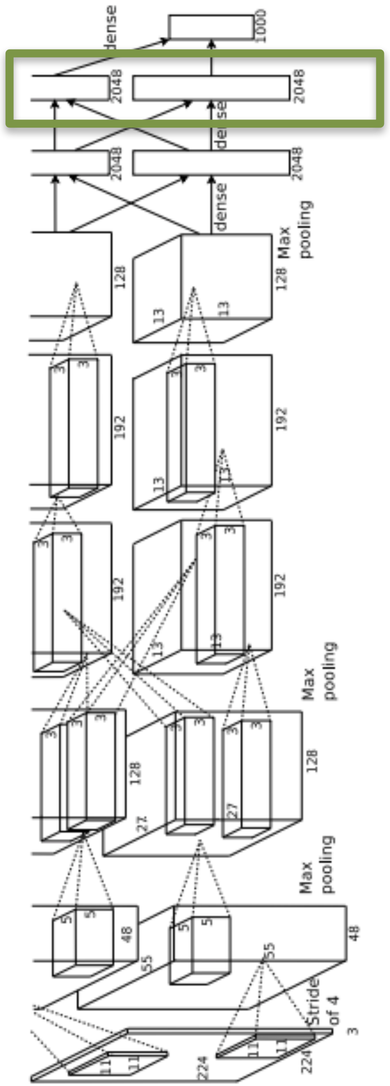

Nearest Neighbors in Feature Space

Nearest neighbors in pixel space

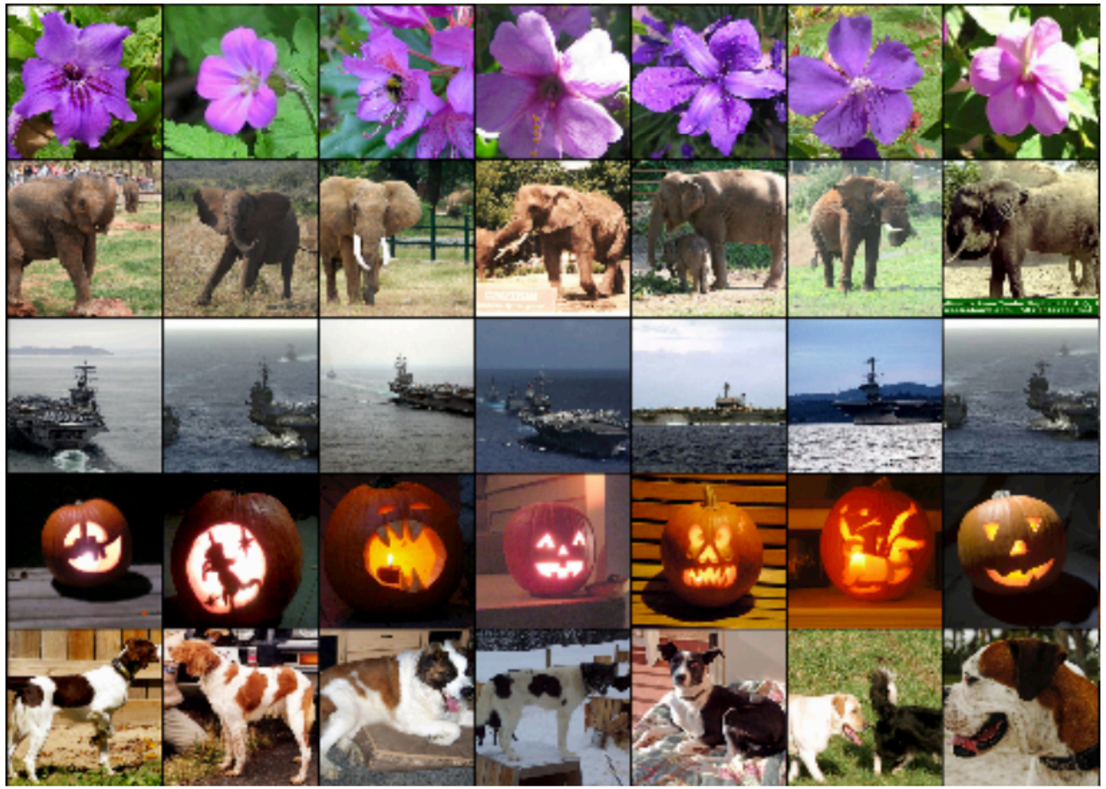

Nearest neighbors in FC7 space

Dimensionality Reduction

$$\mathbb{R}^{4096} \rightarrow \mathbb{R}^{2}$$

1. PCA
2. t-SNE

PCA take the top2 eigen

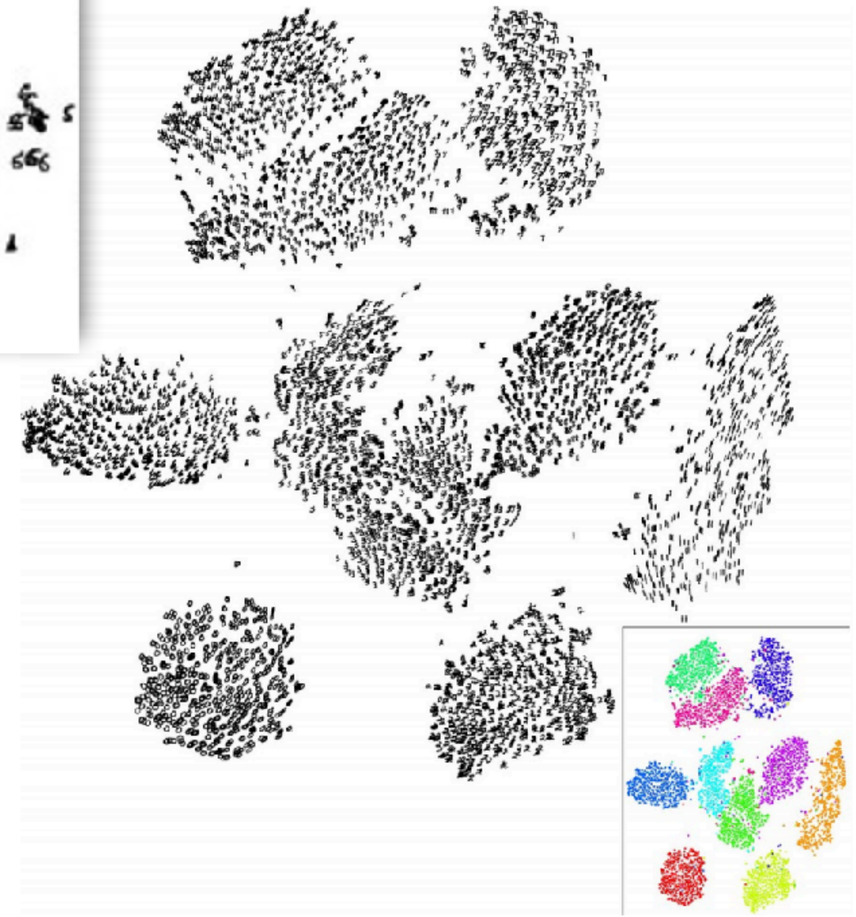

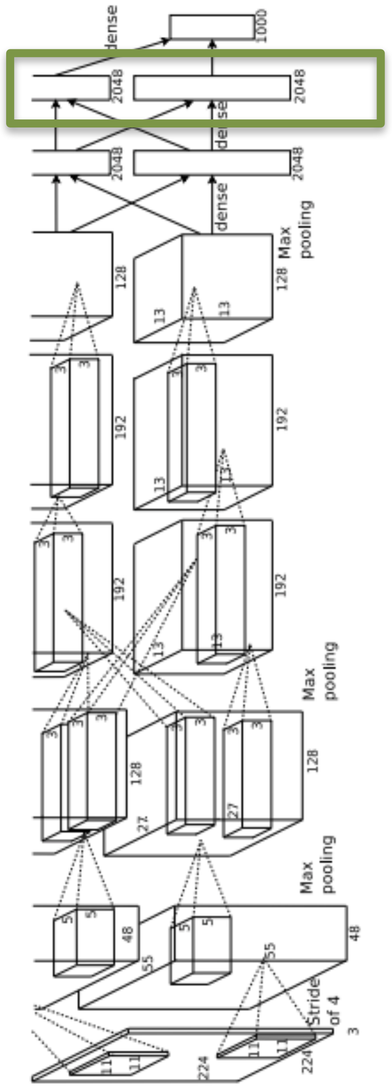

Visualizing Data using t-SNE

Laurens van der Maaten LVDMAATEN@GMAIL.COM
TiCC
Tilburg University
P.O. Box 90153, 5000 LE Tilburg, The Netherlands

Geoffrey Hinton HINTON@CS.TORONTO.EDU
Department of Computer Science
University of Toronto
6 King's College Road, M5S 3G4 Toronto, ON, Canada

Editor: Yoshua Bengio

Dimensionality Reduction

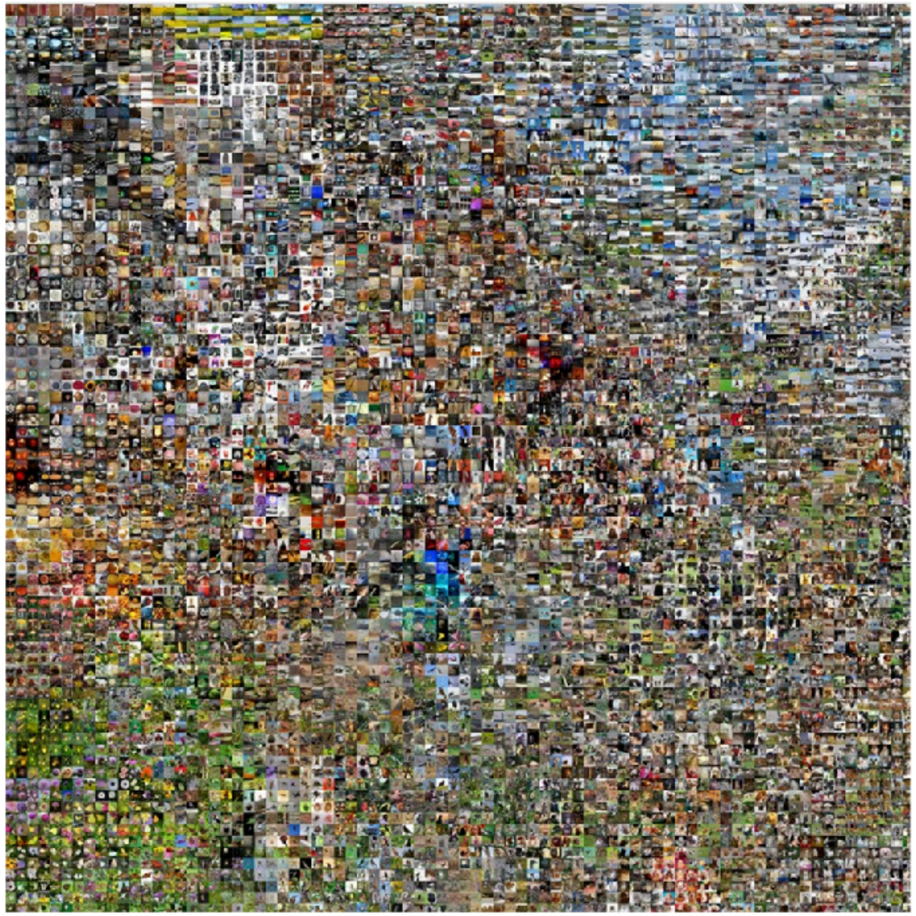

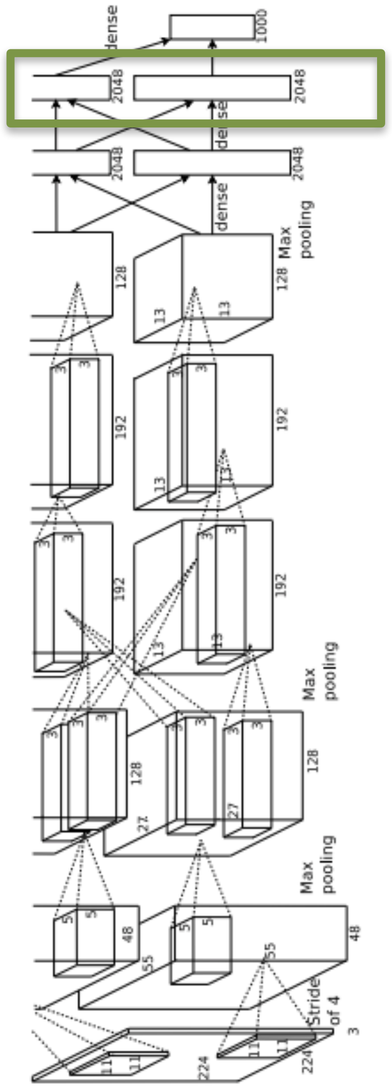

See high-resolution versions at http://cs.stanford.edu/people/karpathy/cnnembed/

Plan for Today

- Visualize filter (kernels)
- Use CNNs as feature maps
- What are the different layers learning?
- **Visualize activations at different layers**
- **Saliency versus Occlusion**
- **Guided backpropagation**
- **Gradient Ascent**
- **Feature Inversion**
- **DeepDreams**

Visualizing Activations: Which Filters ‘Fire’?

freeze kernel 后 ⇒

看哪个 kernel

13

13x13 filters, 128 channels

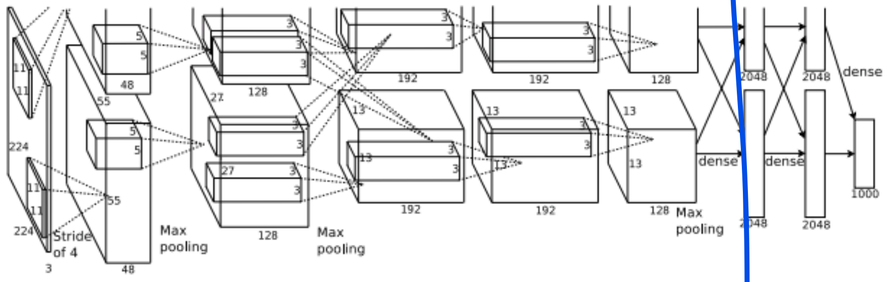

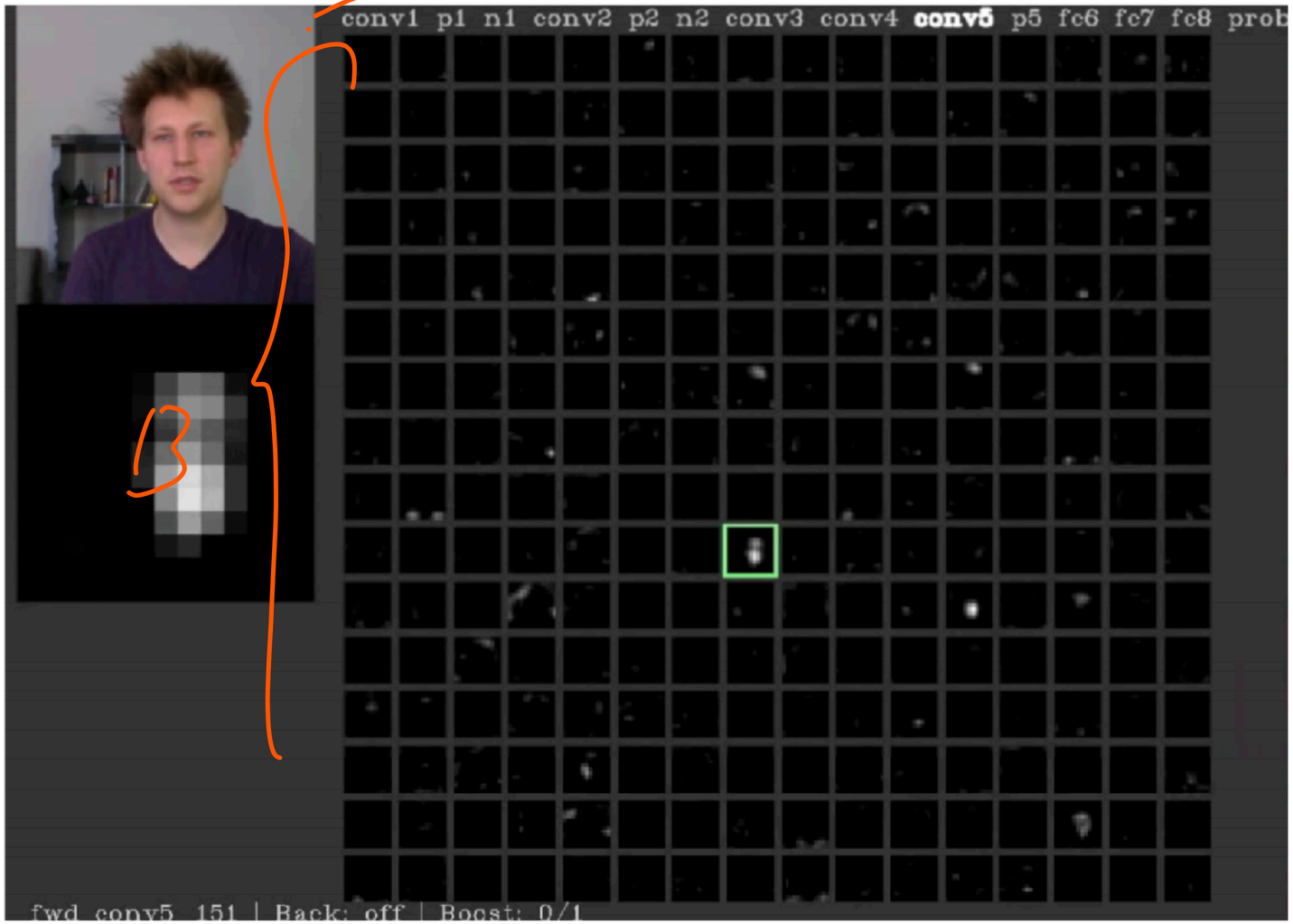

最activate

Maximally Active Filters

- Run many images through the network, record values of chosen channel.
- Visualize image patches that correspond to maximal activations.

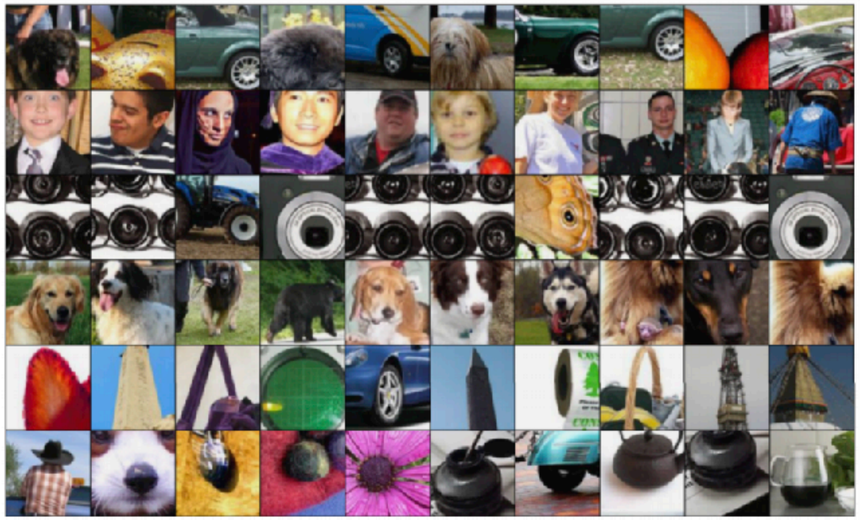

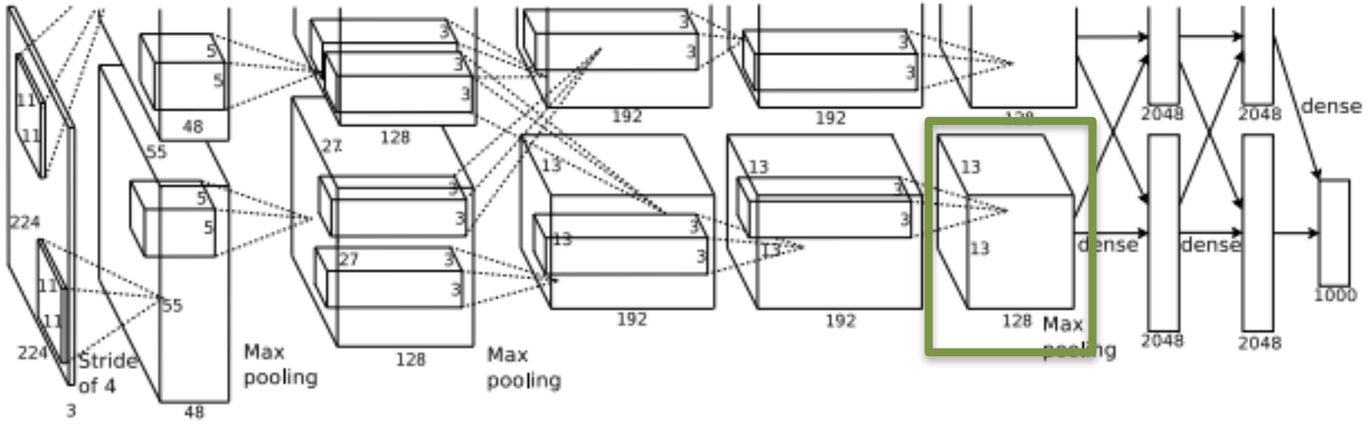

STRIVING FOR SIMPLICITY:
THE ALL CONVOLUTIONAL NET

Jost Tobias Springenberg*, Alexey Dosovitskiy*, Thomas Brox, Martin Riedmiller
Department of Computer Science
University of Freiburg
Freiburg, 79110, Germany
{springj, dosovits, brox, riedmiller}@cs.uni-freiburg.de

Plan for Today

- Visualize filter (kernels)
- Use CNNs as feature maps
- What are the different layers learning?
- Visualize activations at different layers
- **Saliency versus Occlusion**
- **Guided backpropagation**
- **Gradient Ascent**
- **Feature Inversion**
- **DeepDreams**

就指
图像哪部分
分对比以
重要

显著性

Saliency vs Occlusion: Which Pixels Matter?

- Mask out pixels before sending to CN
- Check sensitivity of class probability

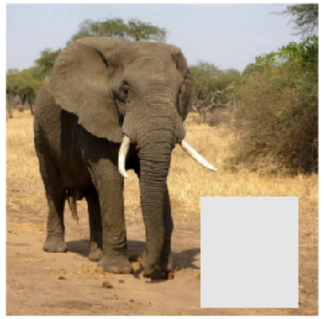

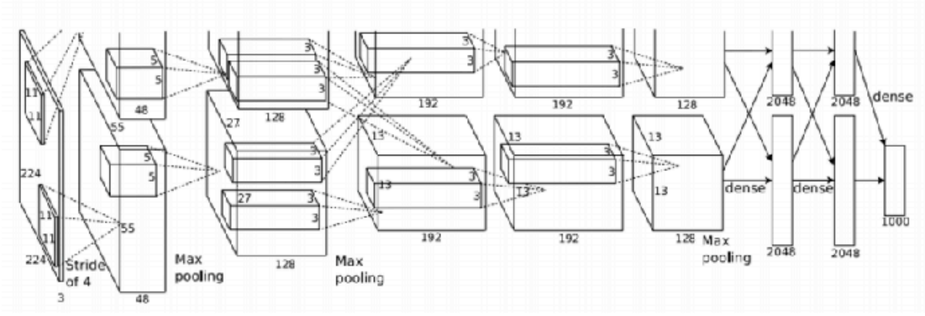

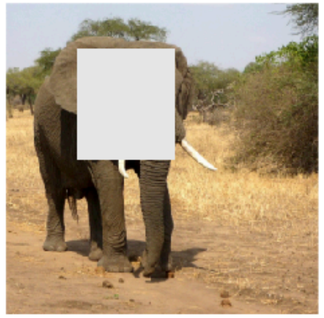

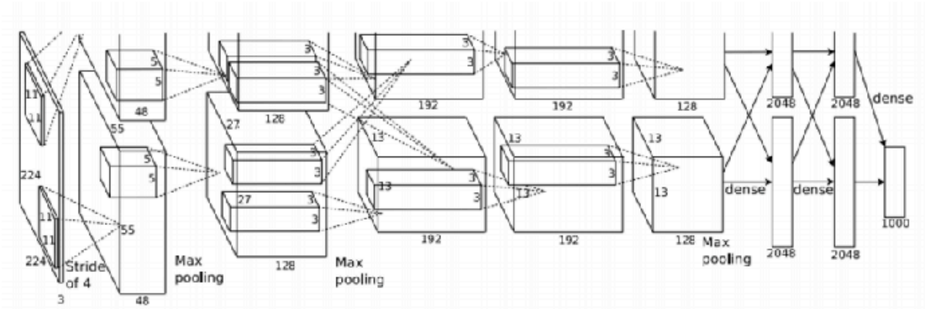

Visualizing and Understanding Convolutional Networks

Matthew D. Zeiler
Dept. of Computer Science, Courant Institute, New York University

Rob Fergus
Dept. of Computer Science, Courant Institute, New York University
FERGUS@CS.NYU.EDU

Saliency via Backprop

Forward pass

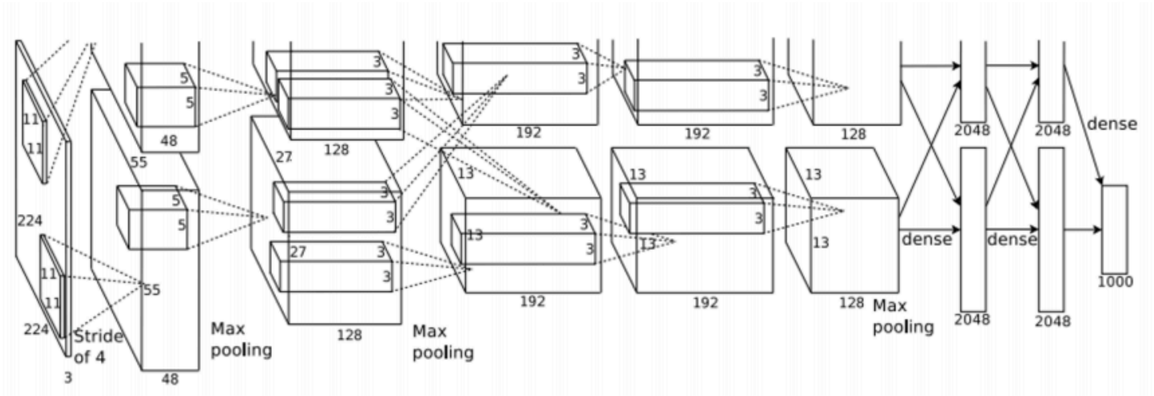

Backward pass

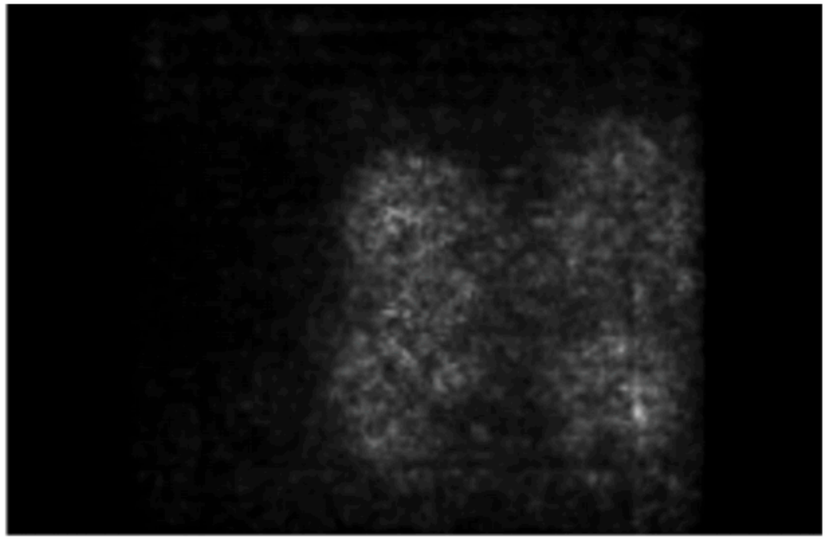

- **Compute gradients wrt image pixels**
- **Take absolute values**
- **Max over RGB channels**

Saliency via Backprop

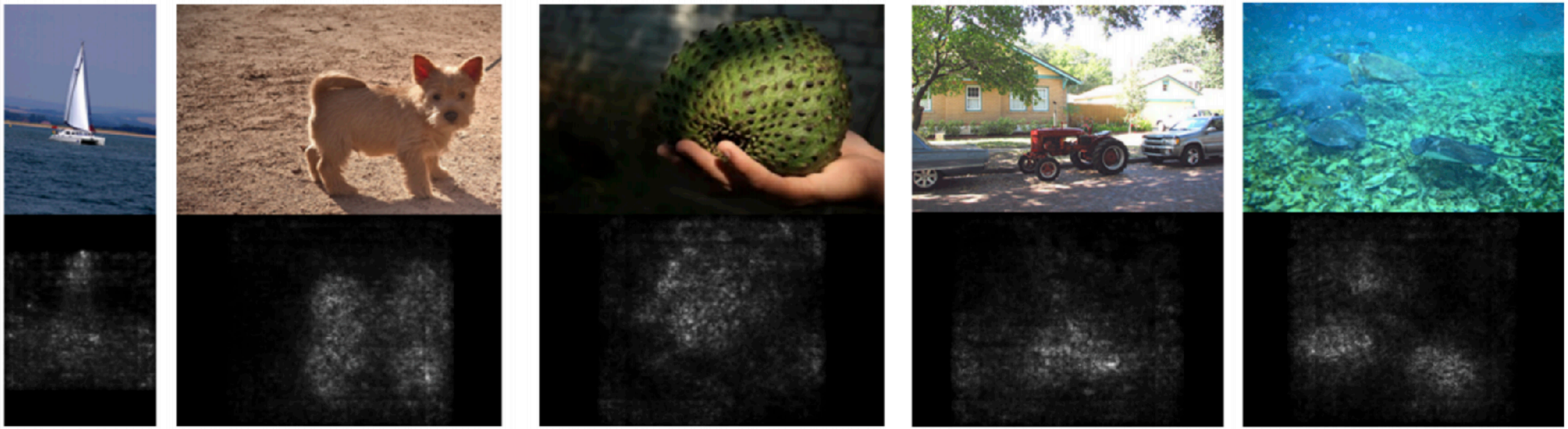

Deep Inside Convolutional Networks: Visualising Image Classification Models and Saliency Maps

Karen Simonyan Andrea Vedaldi Andrew Zisserman
Visual Geometry Group, University of Oxford
{karen,vedaldi,az}@robots.ox.ac.uk

Segmentation w/o Supervision

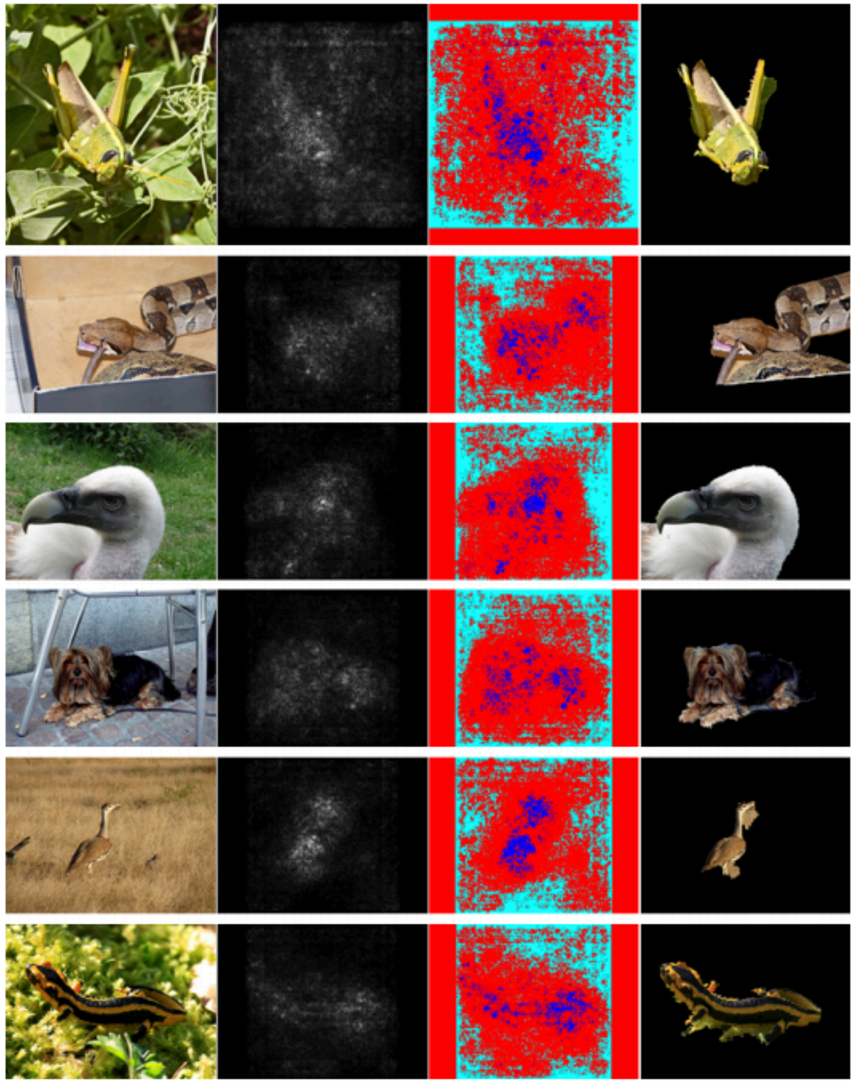

GrabCut on saliency maps

Plan for Today

- Visualize filter (kernels)
- Use CNNs as feature maps
- What are the different layers learning?
- Visualize activations at different layers
- Saliency versus Occlusion
- **Guided backpropagation**
- **Gradient Ascent**
- **Feature Inversion**
- **DeepDreams**

Guided Backprop

- **Pick single intermediate features e.g., one channel of 128x13x13 covn5 feature map**

- **Compute gradients of neuron values wrt image pixels**

Guided Backprop (Layer 2)

这个好像是
在思考图经过layer2
之后什么样子?

kernel

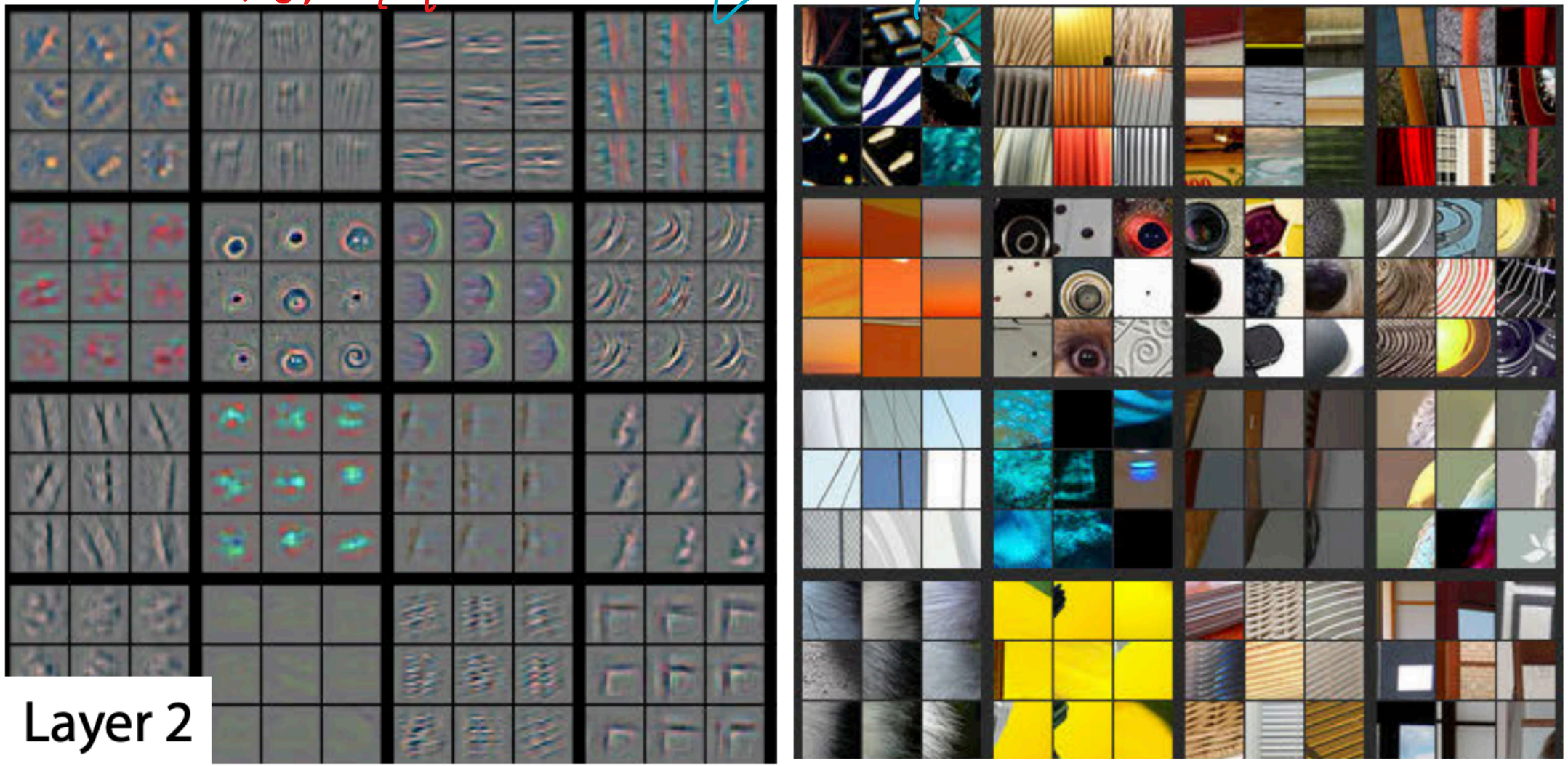

Guided Backprop (Layer 4)

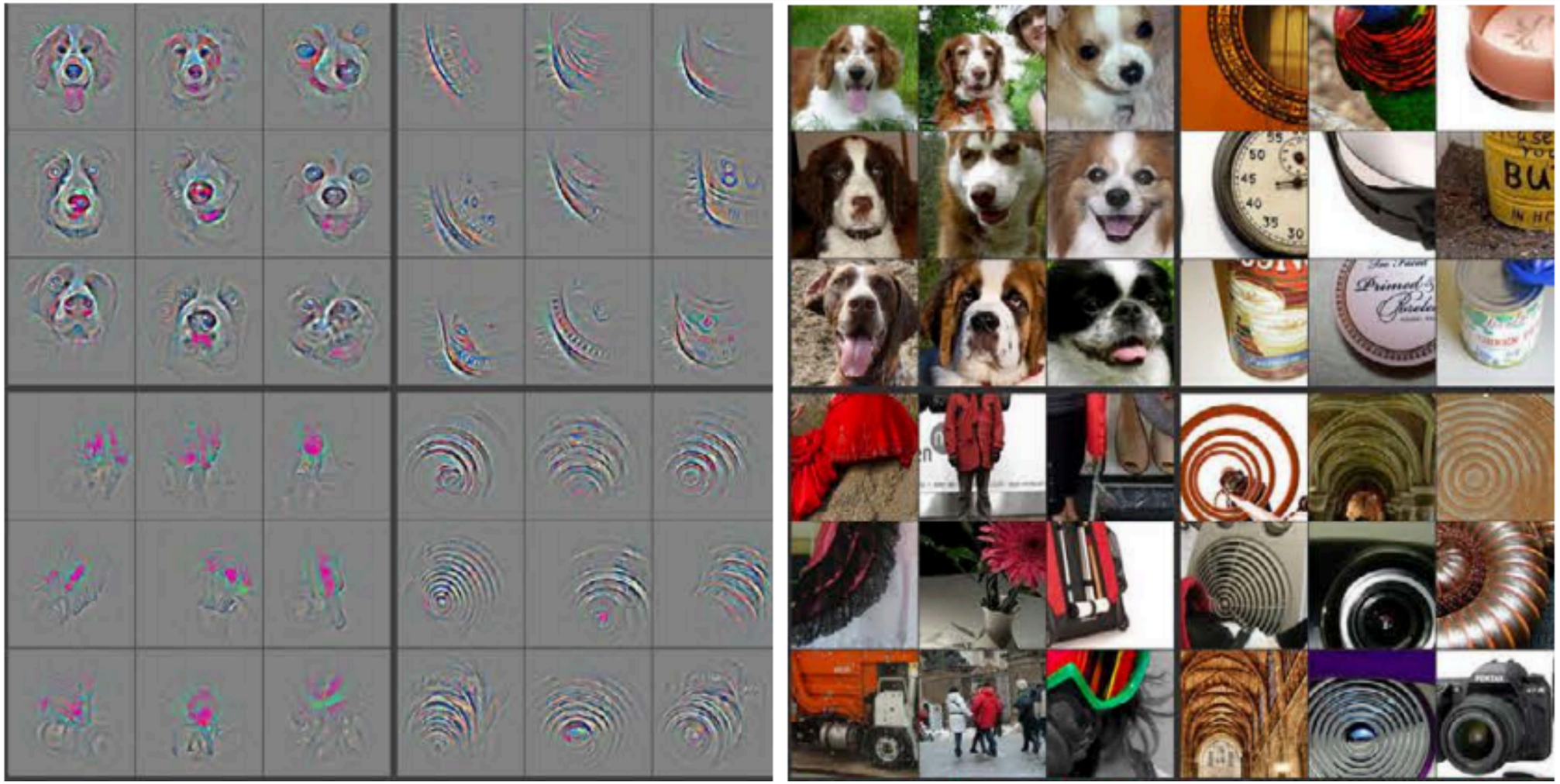

Guided Backprop (Layer 5)

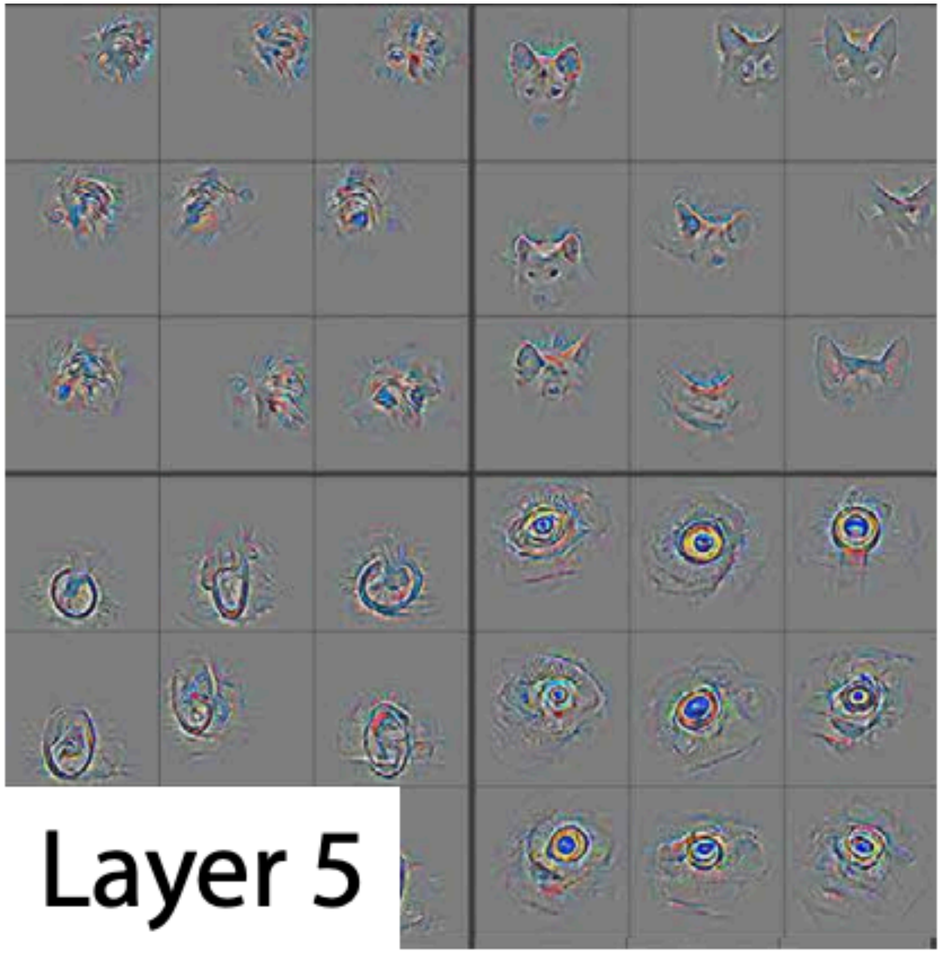

Class Activation Map (CAM)

Learning Deep Features for Discriminative Localization

Bolei Zhou, Aditya Khosla, Agata Lapedriza, Aude Oliva, Antonio Torralba
Computer Science and Artificial Intelligence Laboratory, MIT
{bzhou,khosla,agata,oliva,torralba}@csail.mit.edu

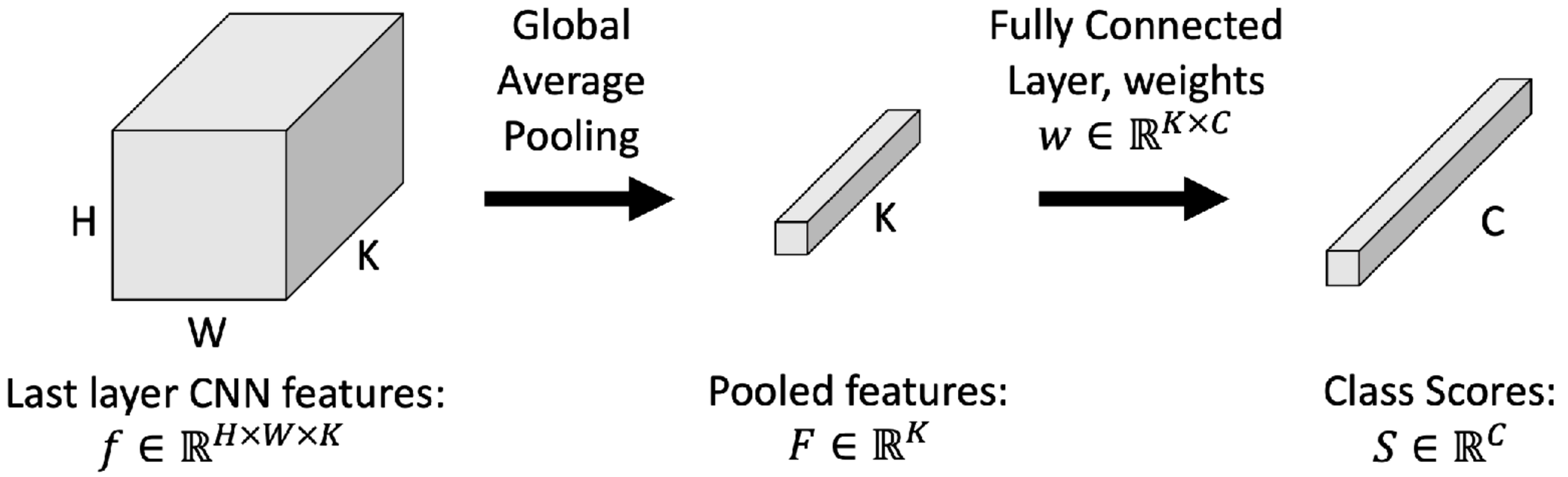

$$F_k = \frac{1}{HW} \sum_{h,w} f_{h,w,k}$$

$$S_c = \sum_k w_{k,c} F_k$$

$$= \frac{1}{HW} \sum_{h,w} \sum_k w_{k,c} f_{h,w,k}$$

$$M_{c,h,w} = \sum_k w_{k,c} f_{h,w,k}$$

Class Activation Map

Class Activation Maps

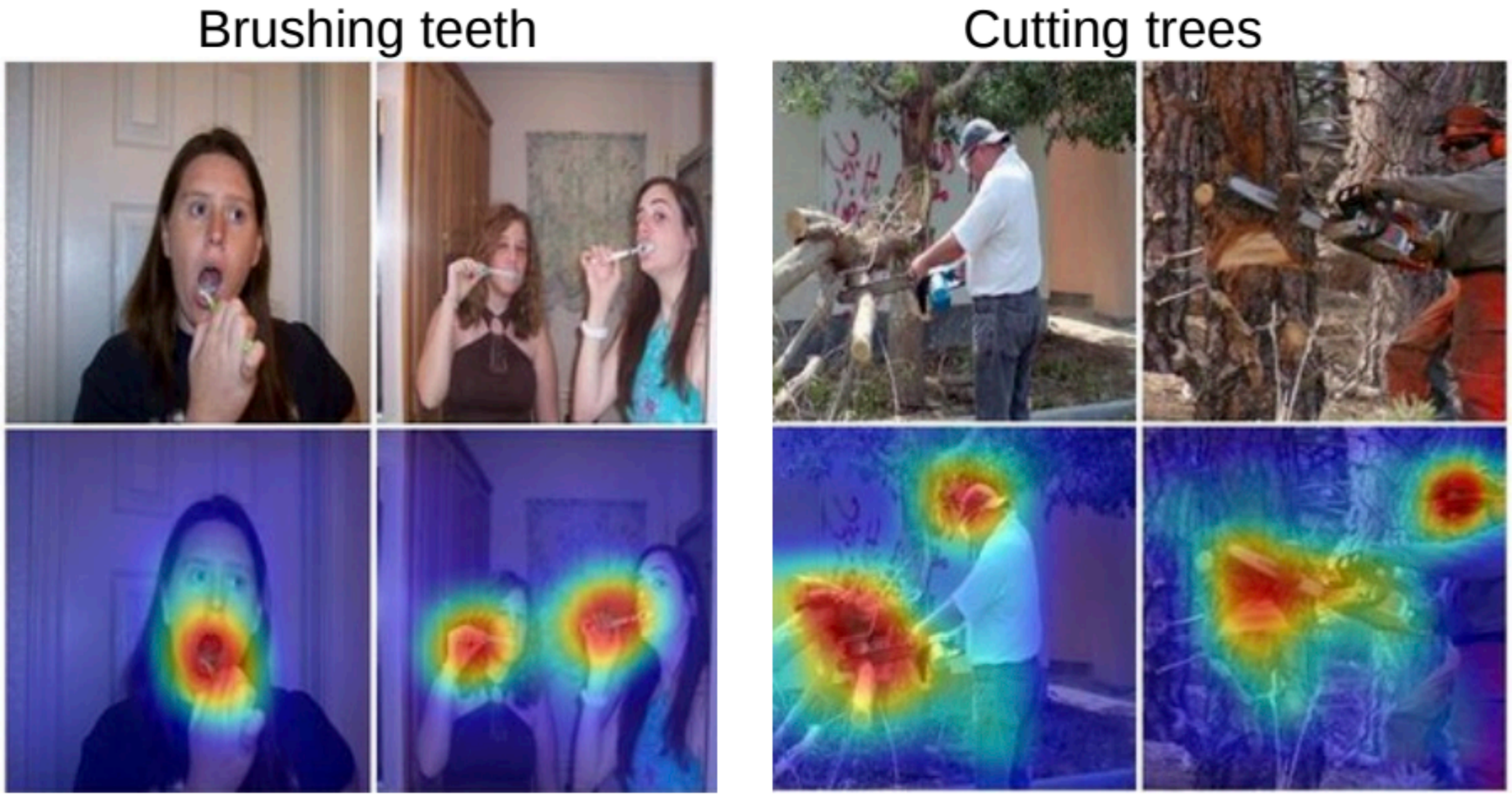

Class Activation wrt Multiple Classes

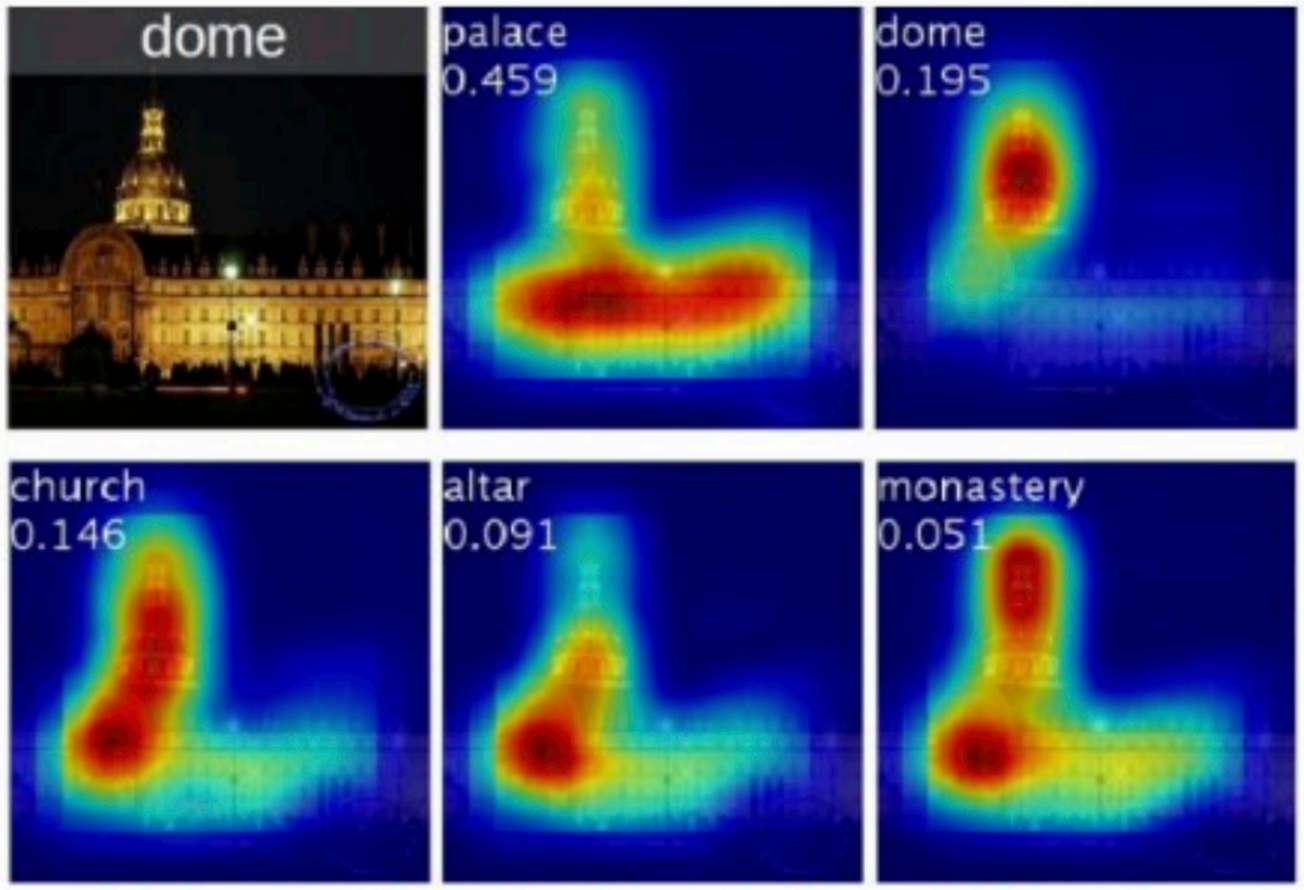

Applied wrt only the last layer

Gradient-Weighted CAM (Grad-CAM)

这两页PPT介绍了一种名为梯度加权类激活映射（Grad-CAM）的技术，以及它在可视化卷积神经网络（CNN）决策过程中的应用。

第一张PPT的内容：

1. **选择一层激活**：从CNN中选择一层，其激活为 $A \in \mathbb{R}^{H \times W \times K}$，其中 H 和 W 是特征图的高度和宽度，K 是通道数。
2. **计算梯度**：计算某个类别得分 S_c 相对于激活 A 的梯度 $\frac{\partial S_c}{\partial A}$。
3. **梯度平均池化**：通过对梯度进行平均池化操作来得到权重 α_k，这些权重指示了每个通道对类别得分的贡献程度。
4. **计算加权激活图**：使用权重 α_k 对激活进行加权求和，然后应用ReLU函数，以生成类激活映射 M_c。ReLU函数的应用是为了只关注对类别有正面影响的特征。

1. Pick a layer with activations $A \in \mathbb{R}^{H \times W \times K}$

2. Compute gradient of class score S_c **with respect to** A**,** $\frac{\partial S_c}{\partial A} \in \mathbb{R}^{H \times W \times K}$

3. Average pool the gradients to get weights $\alpha \in \mathbb{R}^K$**,** $\alpha_k = \frac{1}{HW} \sum_{h,w} \frac{\partial S_c}{\partial A_{h,w,k}}$

4. Compute weighted activation maps $M^c_{h,w} = ReLU\left(\sum_k \alpha_k A_{h,w,k} \right)$

Grad-CAM

(but noise will get worse)

Grad-CAM: Visual Explanations from Deep Networks via Gradient-based Localization

Ramprasaath R. Selvaraju · Michael Cogswell · Abhishek Das · Ramakrishna Vedantam · Devi Parikh · Dhruv Batra

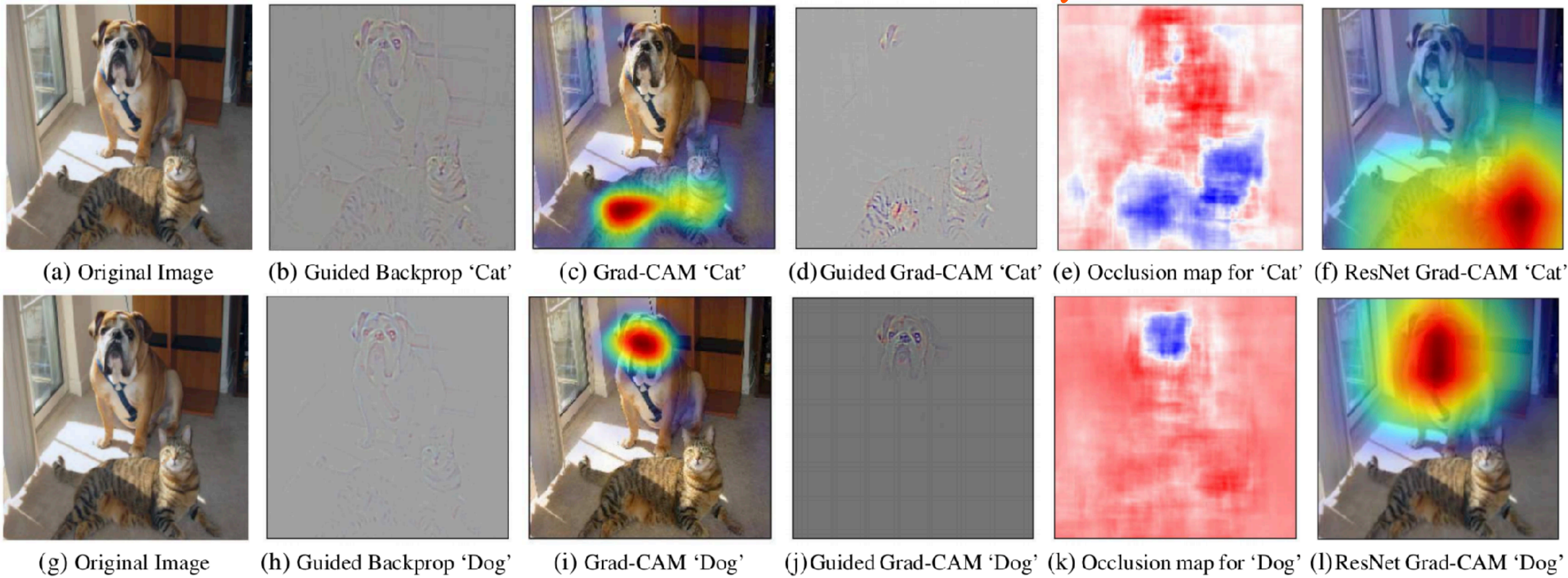

(a) Original Image (b) Guided Backprop 'Cat' (c) Grad-CAM 'Cat' (d) Guided Grad-CAM 'Cat' (e) Occlusion map for 'Cat' (f) ResNet Grad-CAM 'Cat'

(g) Original Image (h) Guided Backprop 'Dog' (i) Grad-CAM 'Dog' (j) Guided Grad-CAM 'Dog' (k) Occlusion map for 'Dog' (l) ResNet Grad-CAM 'Dog'

Guided-CAM

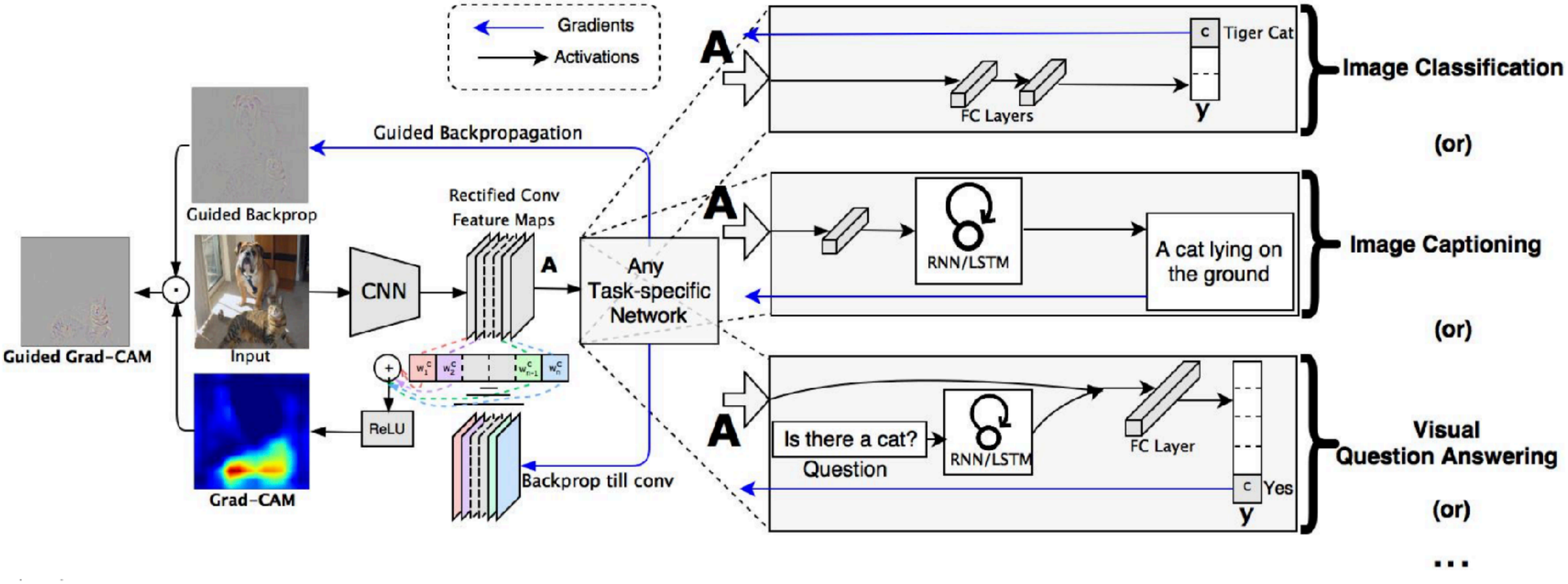
Gradients
Activations
Guided Backpropagation
Guided Backprop
Guided Grad-CAM
Input
Grad-CAM
CNN
Rectified Conv
Feature Maps
A
ReLU
Backprop till conv
Any
Task-specific
Network
A
Tiger Cat
FC Layers
y
Image Classification
(or)
A
RNN/LSTM
A cat lying on
the ground
Image Captioning
(or)
A
Is there a cat?
Question
RNN/LSTM
FC Layer
Yes
y
Visual
Question Answering
(or)
...

Grad-CAM on Image Captioning

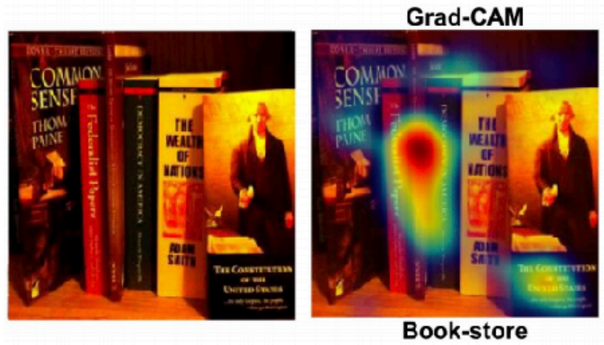

Important concepts for `Book-store`

Positive		Negative	
Neuron ID	Concept	Neuron ID	Concept
78	Book	237	Sky
318	Book	357	road
502	Striped	148	Water
311	Shelf	404	Car
156	Swirly	71	Flower

(a)

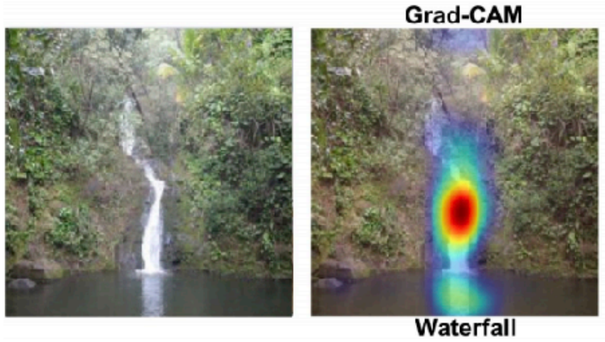

Important concepts for `Waterfall`

Positive		Negative	
Neuron ID	Concept	Neuron ID	Concept
117	Waterfall	115	Corridor
106	Closet	166	Road
148	Water	494	Bus
143	Water	106	Laundromat
216	Stratified	412	Grid

(b)

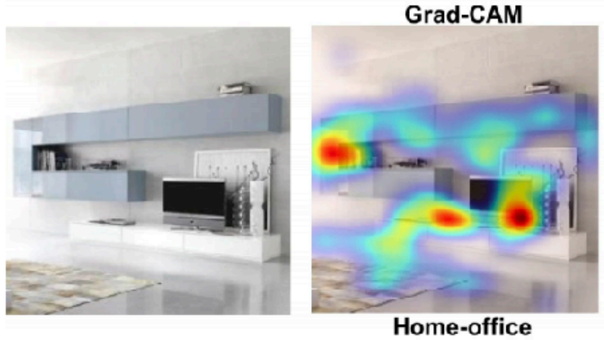

Important concepts for `Home-office`

Positive		Negative	
Neuron ID	Concept	Neuron ID	Concept
78	Book	186	Chequered
312	Desk	237	Sky
75	Office	494	Swimming pool
492	Stove	334	Sidewalk
305	Screen	498	Crosswalk

(c)

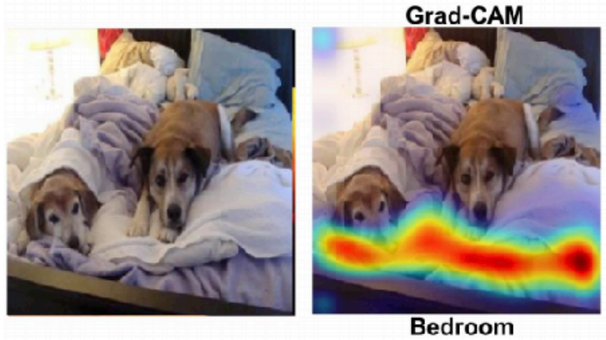

Important concepts for `Bedroom`

Positive		Negative	
Neuron ID	Concept	Neuron ID	Concept
317	Bed	187	Spiralled
290	Bed	294	Pantry
226	Painting	26	Toiled
175	Cushion	9	Shoe shop
117	Waterfall	182	Amusement park

(d)

Plan for Today

- Visualize filter (kernels)
- Use CNNs as feature maps
- What are the different layers learning?
- Visualize activations at different layers
- Saliency versus Occlusion
- Guided backpropagation
- **Gradient Ascent**
- **Feature Inversion**
- **DeepDreams**

Visualizing CNN Features: Gradient Ascent

- **Guided Backprop:**
  Find parts of image that maximally responds to a neuron

- **Gradient Ascent:**
  Find a synthetic image that maximally activates a neuron

$$I^\star = \arg\max_I f(I) + \lambda R(I)$$

Gradient Ascent $I^\star = \arg\max_I \{S_c(I) - \lambda \|I\|^2\}$

- **Initialize image** $I = 0$
- **Forward image to compute scores** $S_c(I)$
- **Backprop to get gradients of neuron values wrt image pixels**
- **Update image as** $I \leftarrow I + \dfrac{\partial S_c(I)}{\partial I}$

Gradient Ascent

Other regularizers:
1. Gaussian blur
2. Clip pixels with values ~ 0
3. Clip pixels with gradients ~ 0

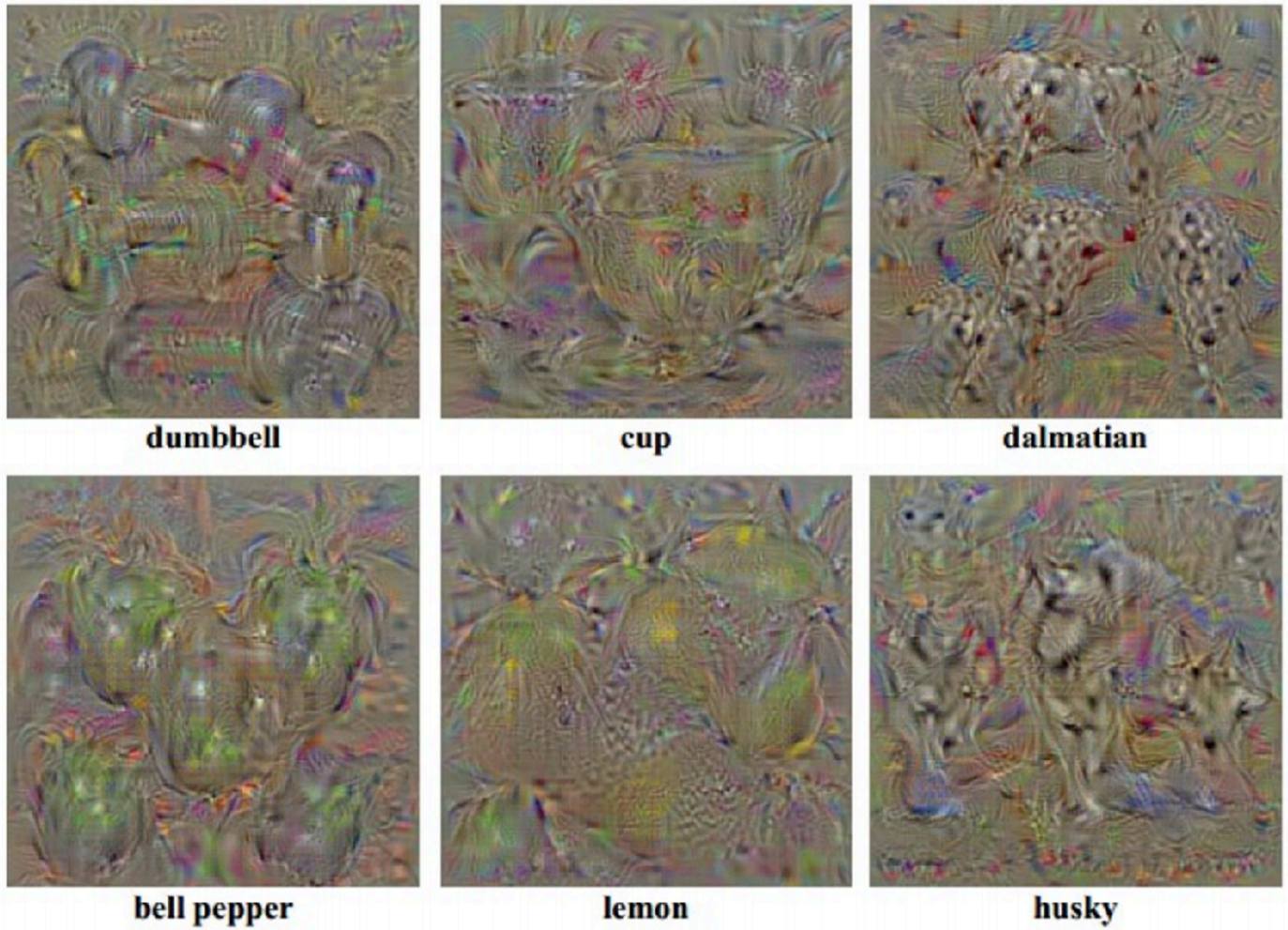

GA Results: More

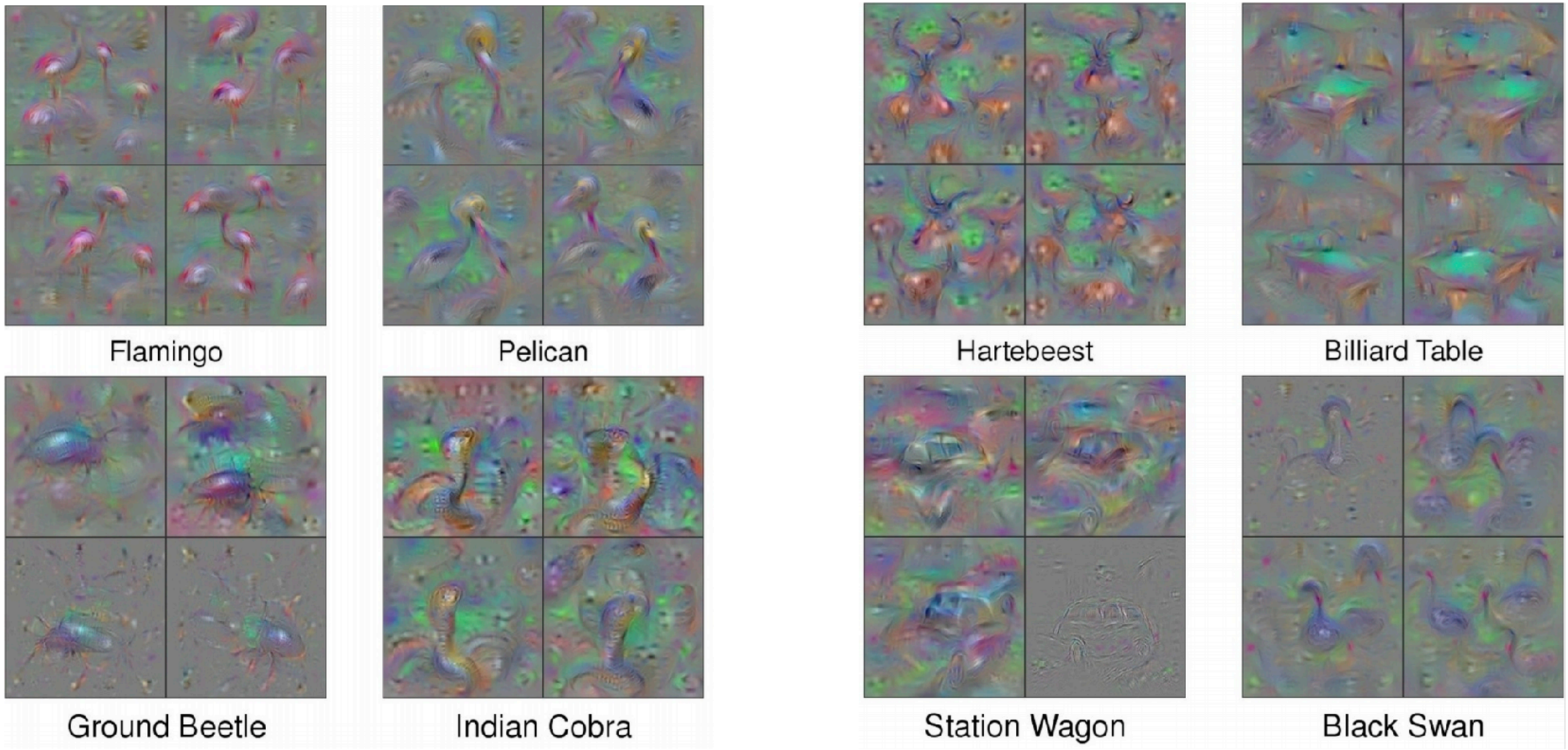

Visualize Intermediate Features

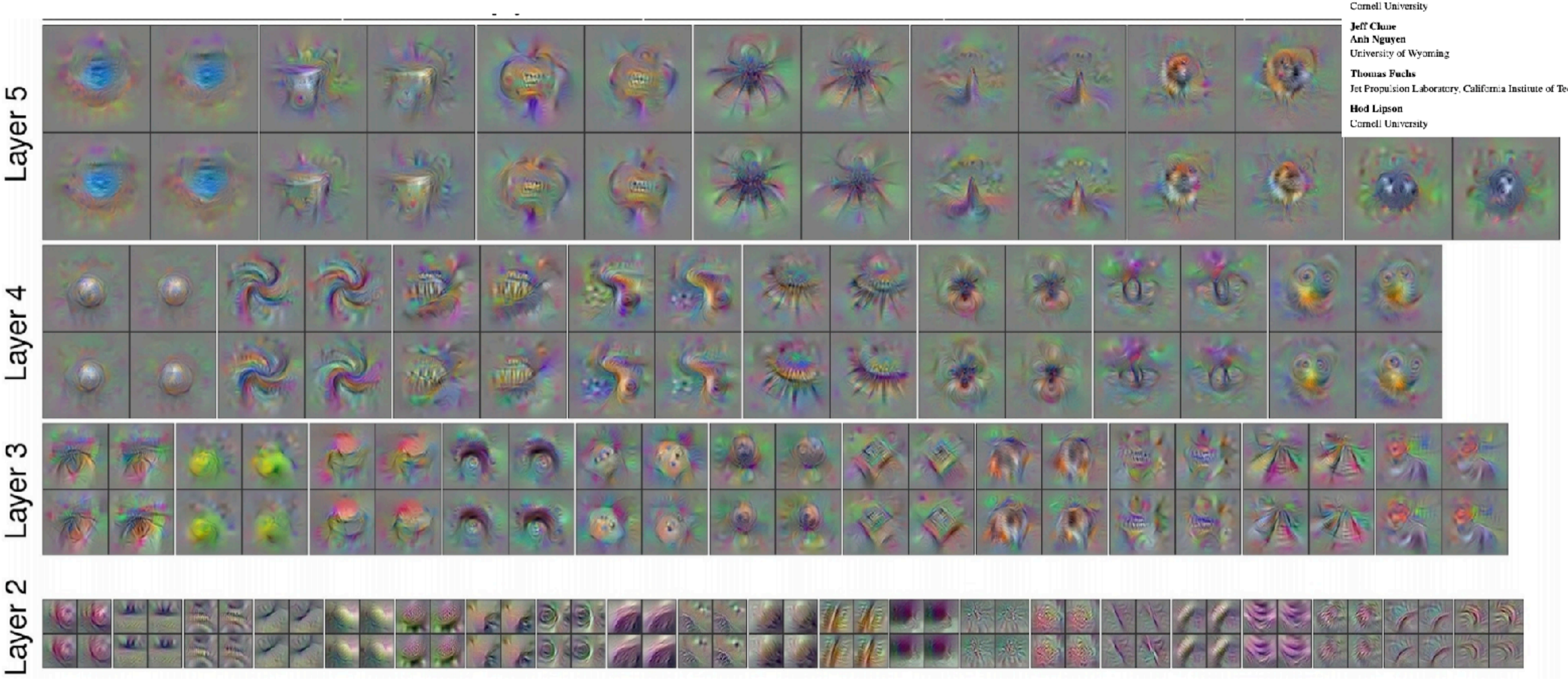

Understanding Neural Networks Through Deep Visualization

Jason Yosinski YOSINSKI@CS.CORNELL.EDU
Cornell University

Jeff Clune JEFFCLUNE@UWYO.EDU
Anh Nguyen ANGUYEN8@UWYO.EDU
University of Wyoming

Thomas Fuchs FUCHS@CALTECH.EDU
Jet Propulsion Laboratory, California Institute of Technology

Hod Lipson HOD.LIPSON@CORNELL.EDU
Cornell University

Stronger Regularizers for GAs

Reconstructions of multiple feature types (facets) recognized by the same “grocery store” neuron

Corresponding example training set images recognized by the same neuron as in the "grocery store" class

More results: Stronger Regularizers

Relation to Adversarial Training

Adversarial Training: Examples

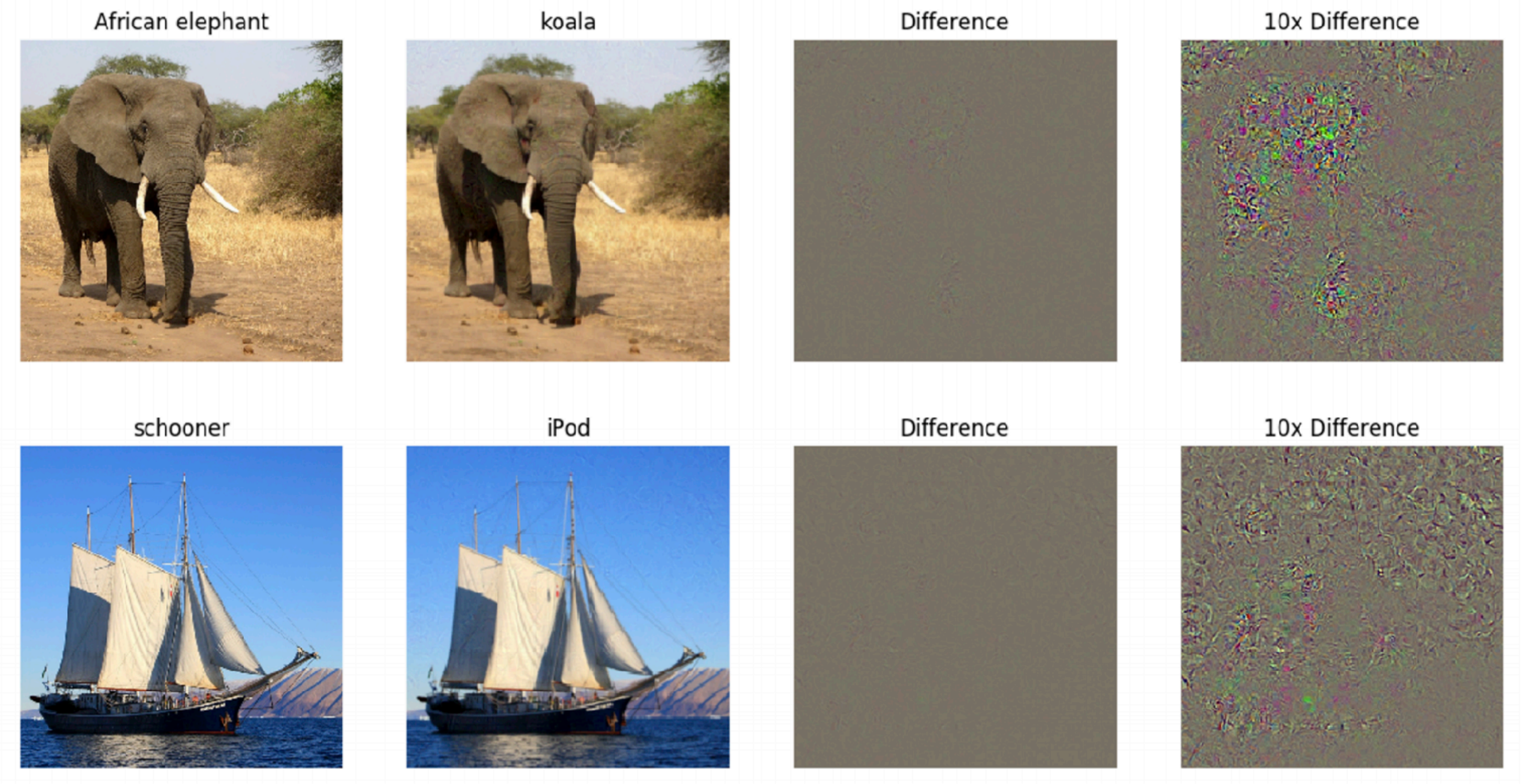

Plan for Today

- Visualize filter (kernels)
- Use CNNs as feature maps
- What are the different layers learning?
- Visualize activations at different layers
- Saliency versus Occlusion
- Guided backpropagation
- Gradient Ascent
- **Feature Inversion**
- **DeepDreams**

Feature Inversion

$$x^\star = \arg\min_I \{ l(\Phi(I), \Phi_0) + \lambda \mathcal{R}(I) \}$$

$$l(\Phi(I), \Phi_0) = \|\Phi(I) - \Phi_0\|^2$$

$$\mathcal{R}_\beta(I) = \sum_{i,j} \left((I(i,j+1) - I(i,j))^2 + (I(i+1,j) - I(i,j))^2 \right)^{\frac{\beta}{2}}$$

Feature Inversion

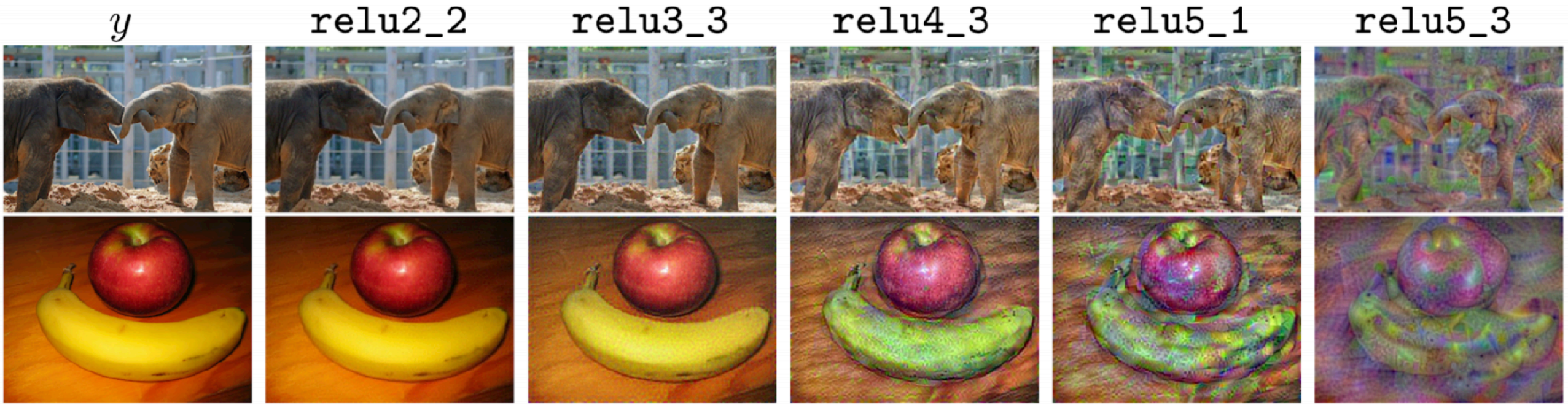

Plan for Today

- Visualize filter (kernels)
- Use CNNs as feature maps
- What are the different layers learning?
- Visualize activations at different layers
- Saliency versus Occlusion
- Guided backpropagation
- Gradient Ascent
- Feature Inversion
- **DeepDreams**

Deep Dream: Amplify Features

- C
- S
- C
- U

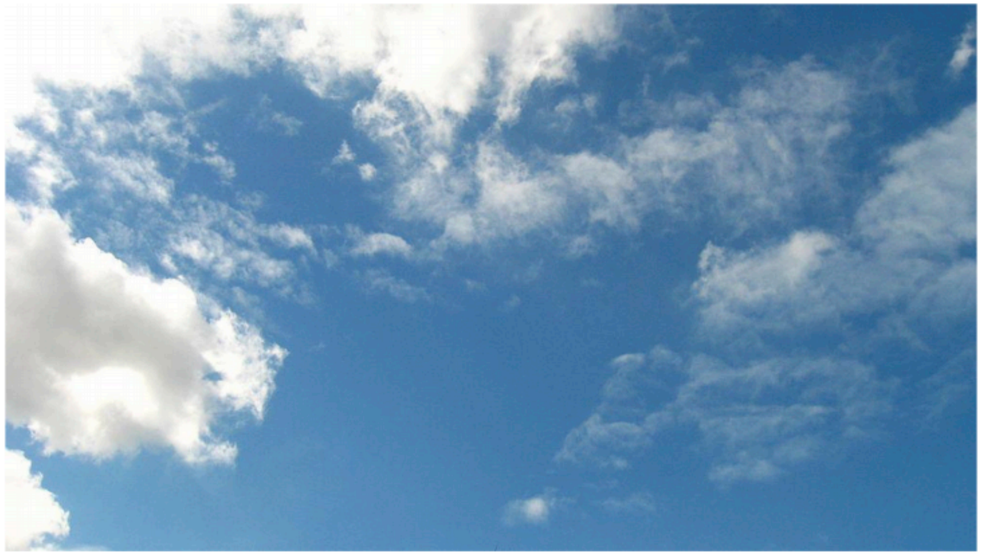

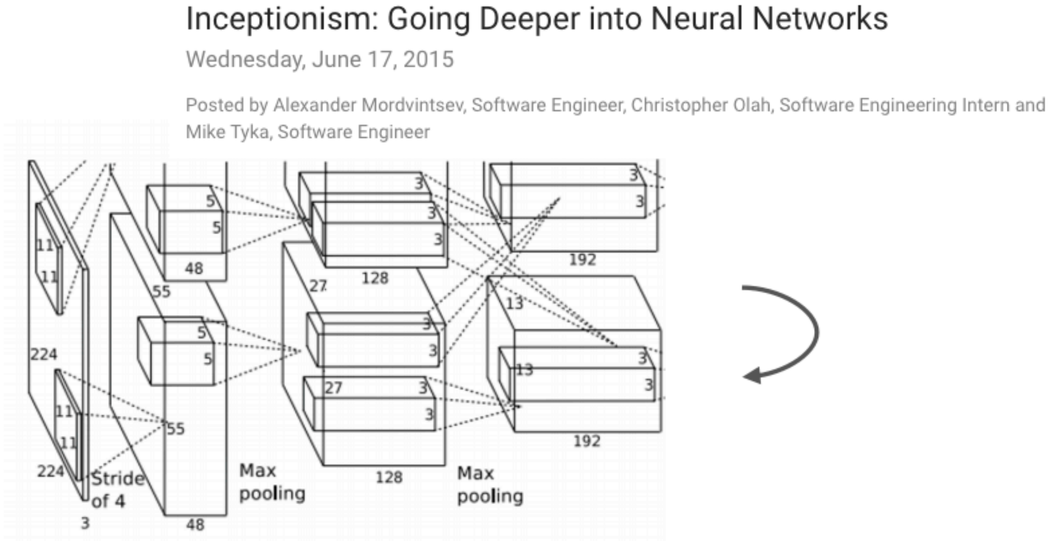

$$I^\star = \arg\max_I \sum_i f_i(I)^2$$

DeepDream

DeepDream