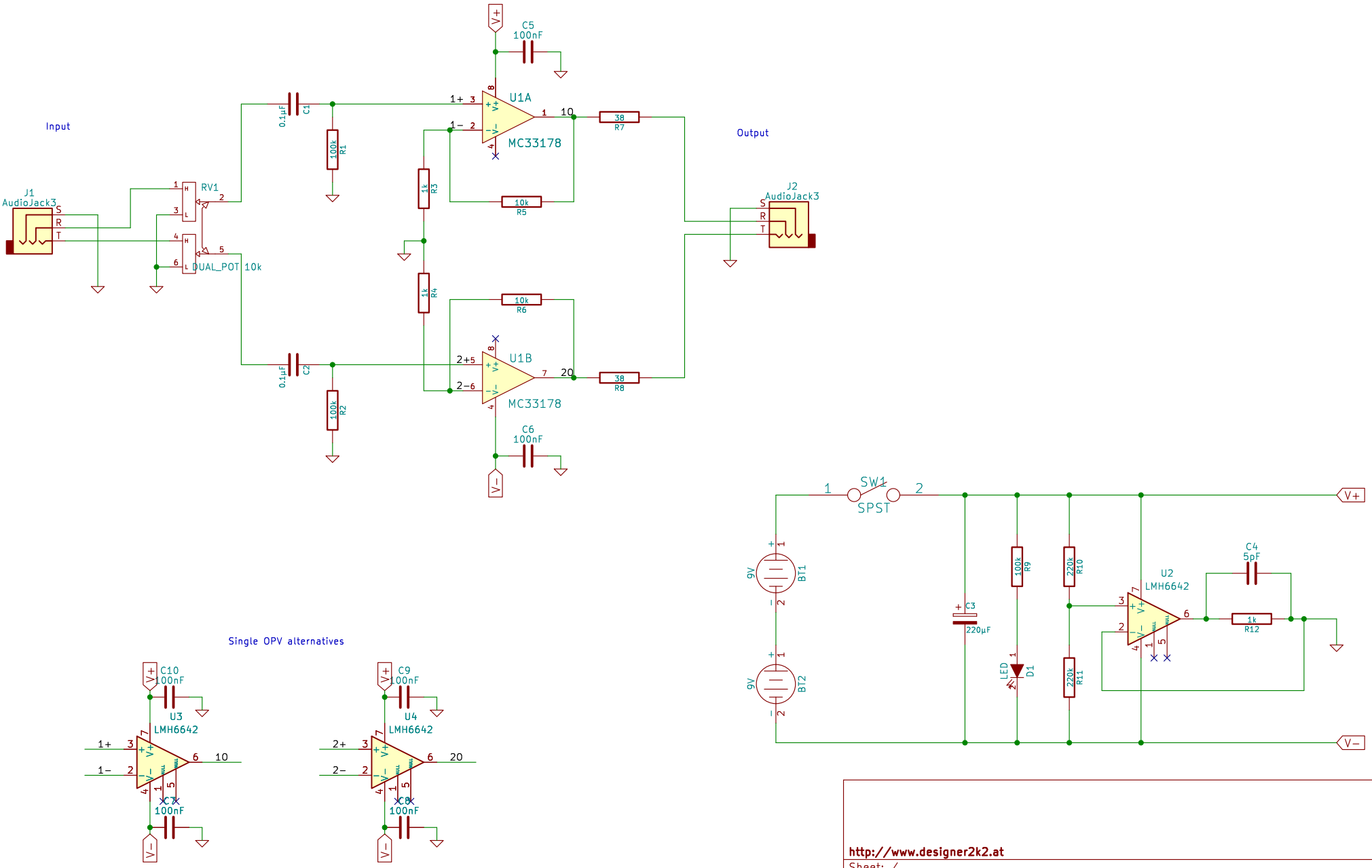

http://www.designer2k2.at

Sheet: /

File: cmoy_opamp.kicad_sch

Title: opamp headphone amplifier (cmoy)

Size: A4	Date: 2023-04-16	Rev: 0.1
KiCad E.D.A. kicad 7.0.1		Id: 1/1