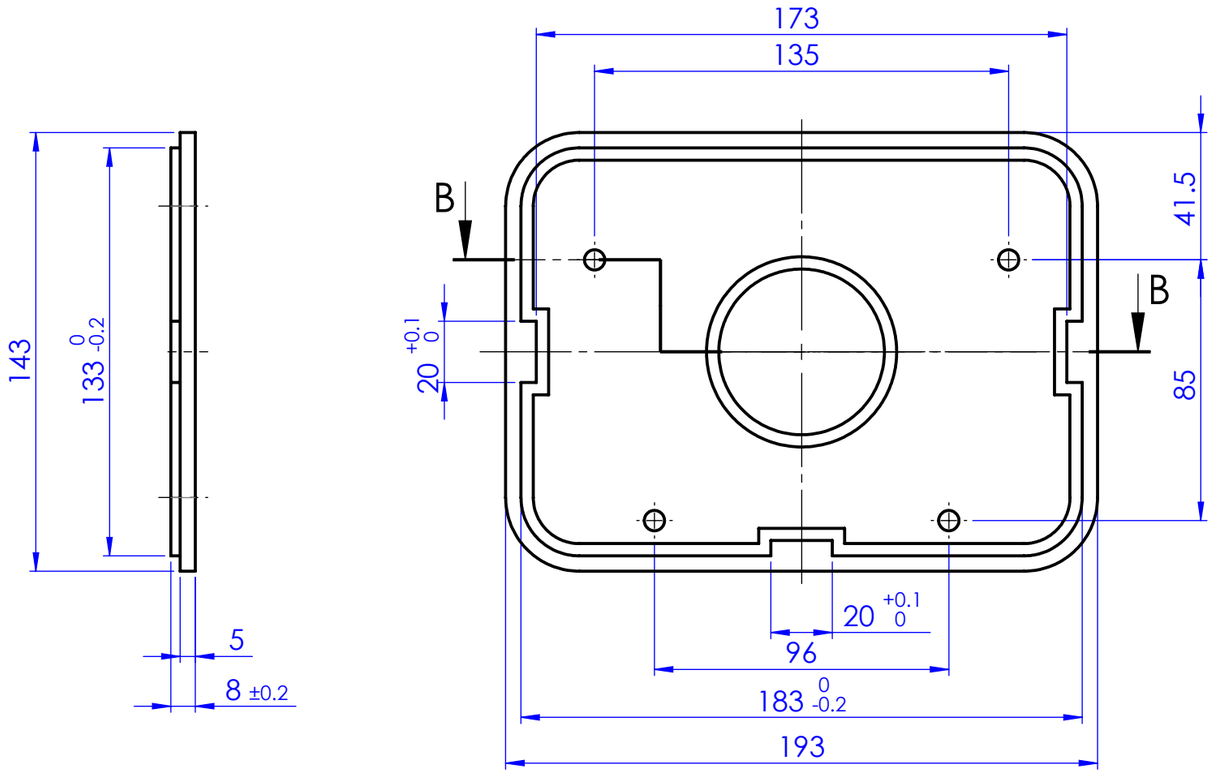

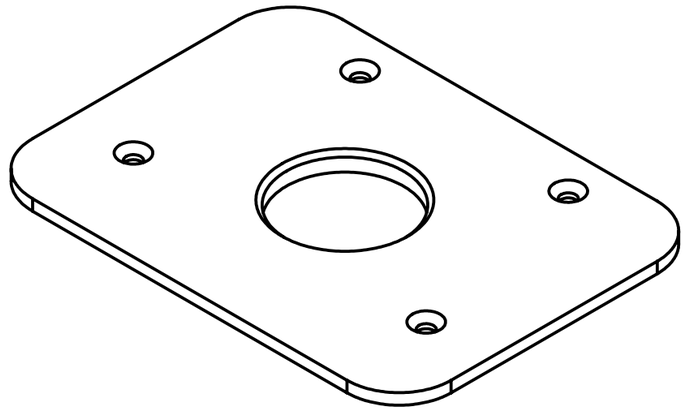

B-B (1 : 2)

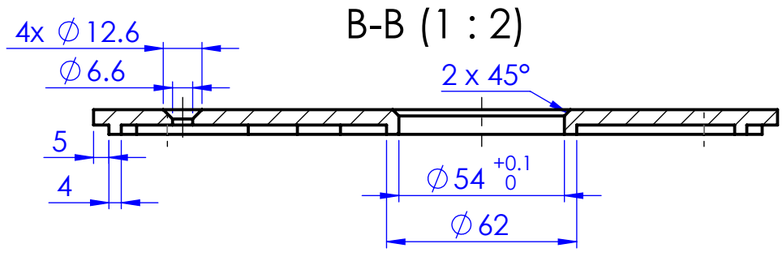

Format:	A3	www.designfirst.eu			Treated:
Scale:	1:1				Title: Cover
Projection:		Weight [g]: 132.14	Units: mm		
DESIGN FIRST		Designed by: Yanev M.	Checked by: Tomov D.		Drawing number: MD-3-00.00.00.02
		Approved by: Tomov D. Date: 26.8.2019 г.	Signature:		Sheet: 1 / 1