View from Left side (Scale 2:1)

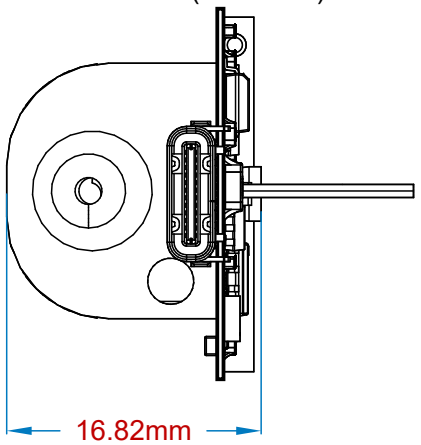

View from Top side (Scale 2:1)

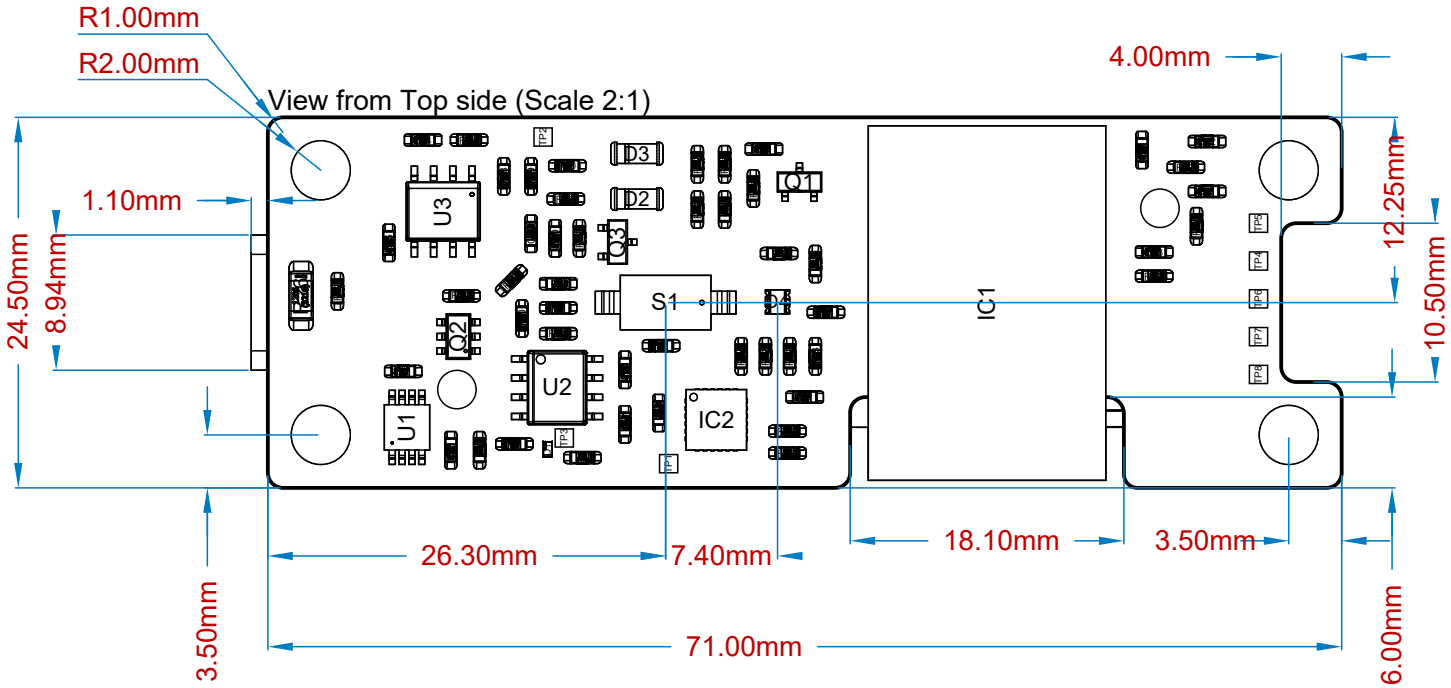
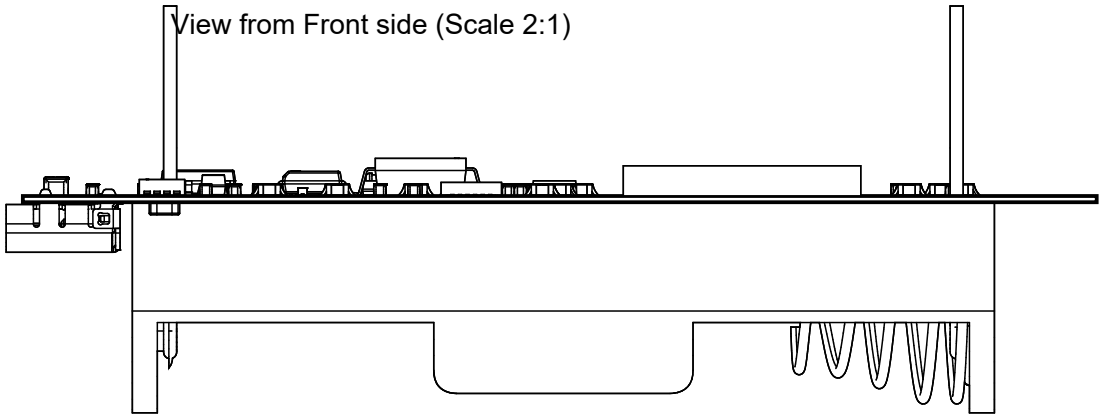
View from Front side (Scale 2:1)