Bottom

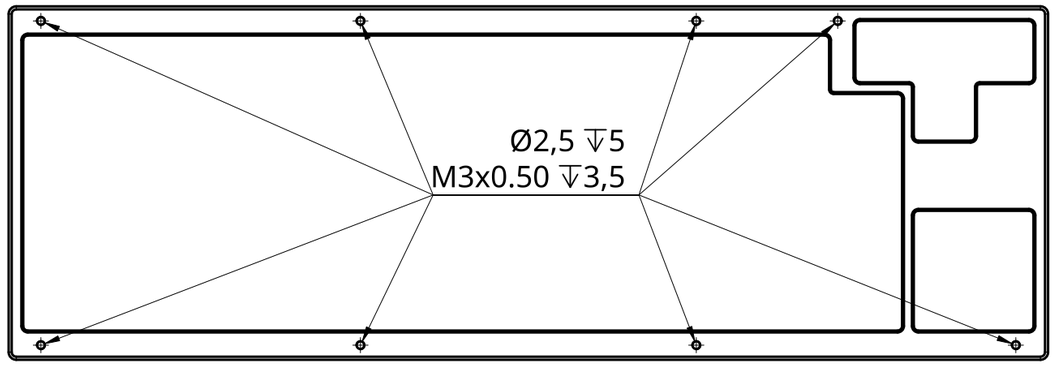

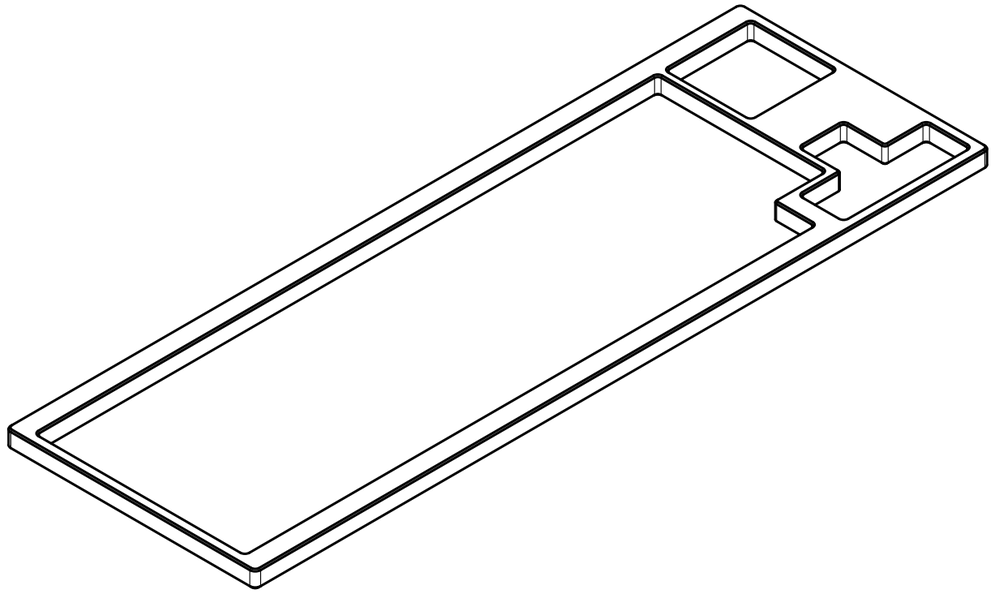

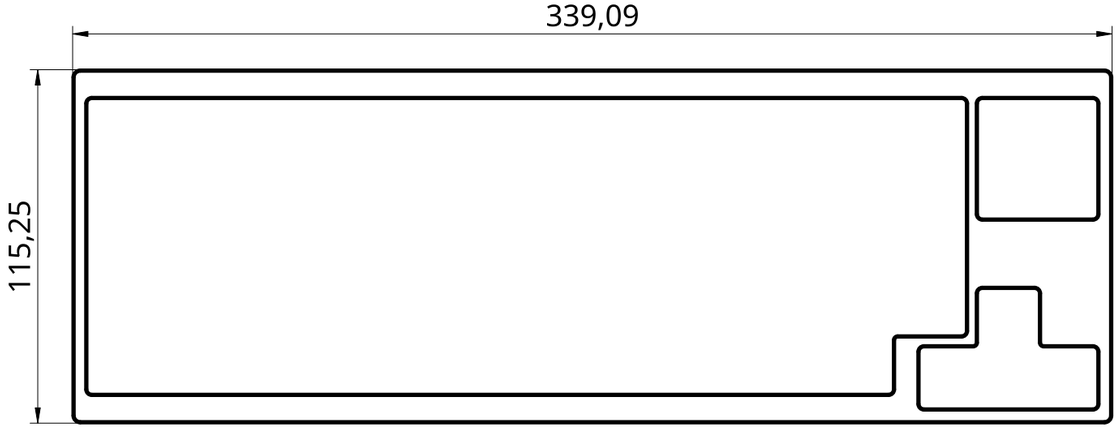

Top

Notes:

1. This drawing is an overview only; refer to 3D model for detailed dimensions.

2. Bottom surface is non-cosmetic; blemishes are acceptable.

3. All other surfaces should be free of tooling marks, hook/racking marks, dents, scratches, and other blemishes.

		NAME	SIGNATURE	DATE
UNLESS OTHERWISE SPECIFIED, DIMENSIONS ARE IN MILLIMETERS ANGULAR = ± °	DRAWN	KANAKO TAKAHASHI		2022-03-23
SURFACE FINISH √	CHECKED			
	APPROVED			
DO NOT SCALE DRAWING				
BREAK ALL SHARP EDGES AND REMOVE BURRS				
FIRST ANGLE PROJECTION	MATERIAL: Aluminium 6063	FINISH: Bead Blast #150, Anodize Type-II Clear		

TITLE: Akihabara 65 Case Top

SIZE	DWG NO.	REV.
A3	1	

SCALE	WEIGHT	SHEET
1:2		1 of 1