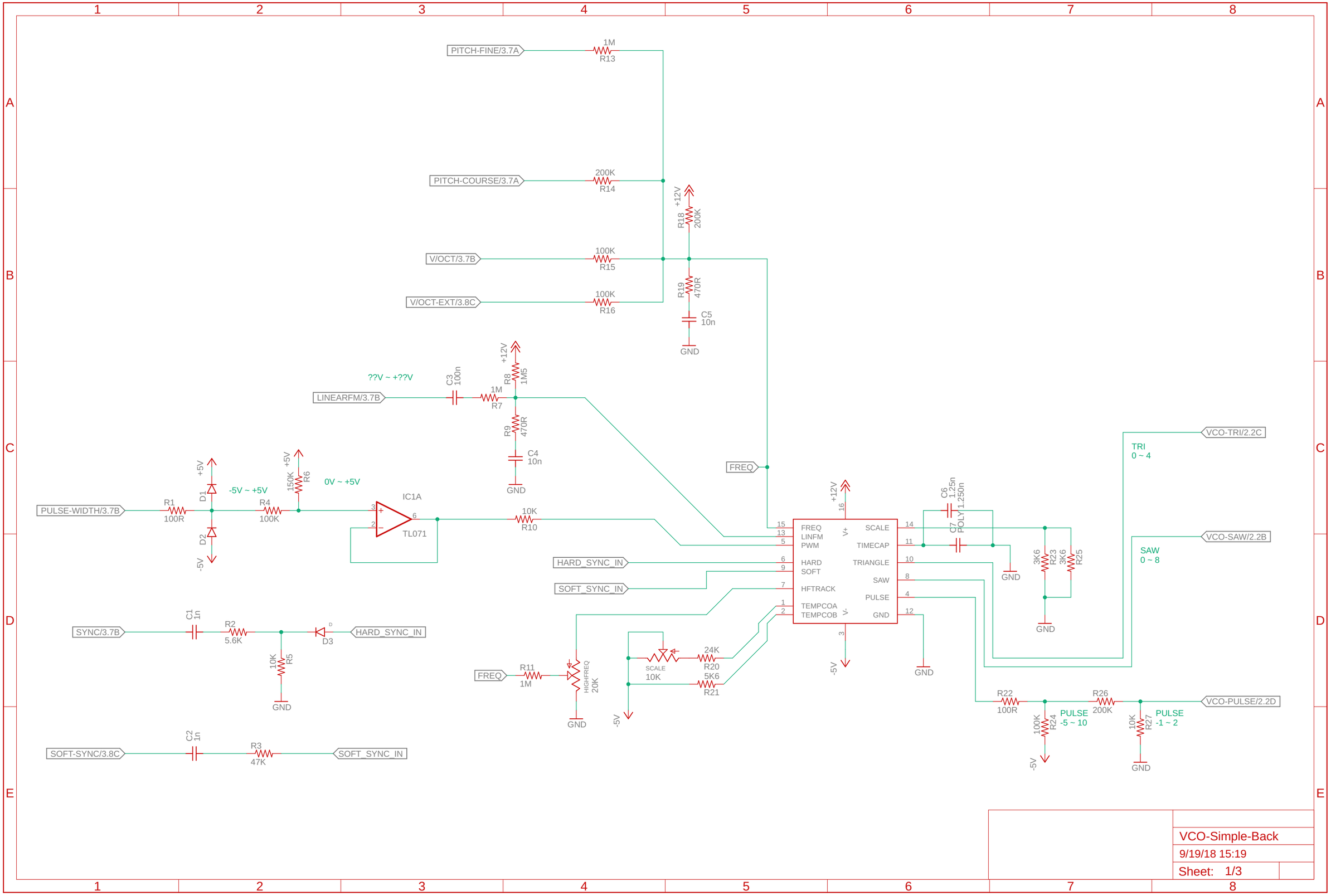

VCO-Simple-Back
9/19/18 15:19
Sheet: 1/3

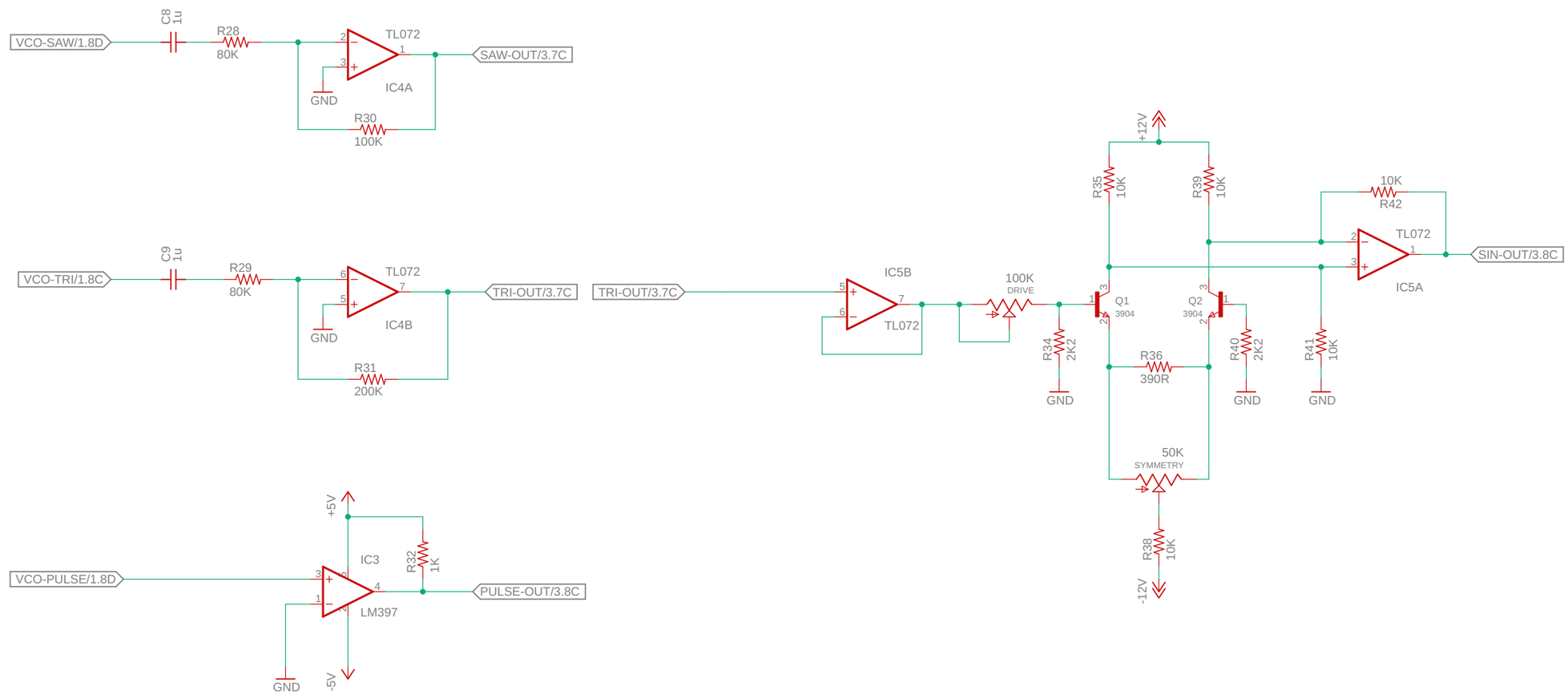

VCO-Simple-Back

9/19/18 15:19

Sheet: 2/3

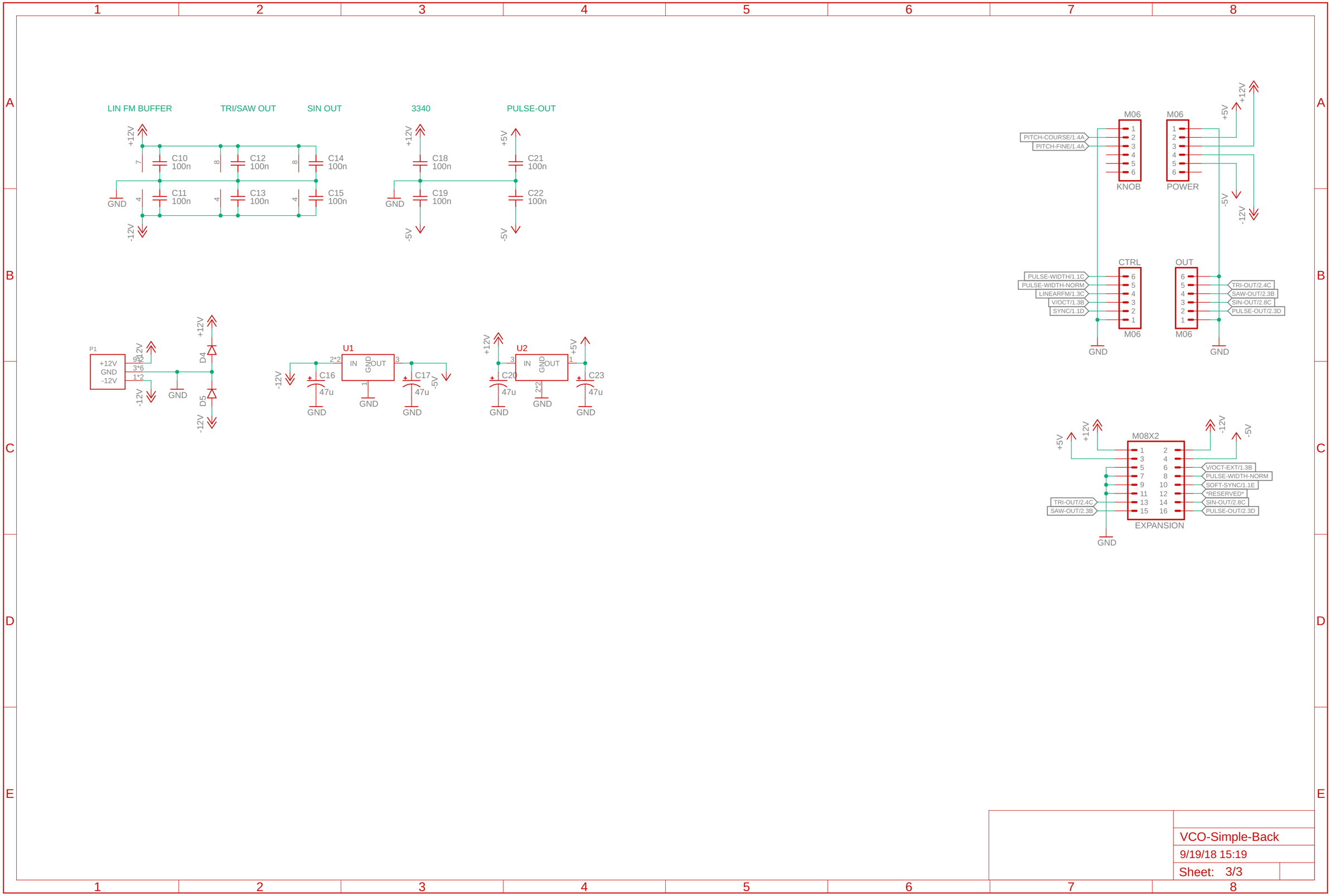

VCO-Simple-Back

9/19/18 15:19

Sheet: 3/3