RSSI Det Circuit

Video Bandwidth [CLPF] Calculation

BW_{video} sets the window aka resolution of the log det AD8317...

$\boxed{C_{LPF}\uparrow, BW_{video}\downarrow}$

$$f_{LT} = \frac{1}{2\pi \times 1.5k\Omega \times BW_{video}} - 3.5pF$$

$C_{LPF} = 10nF$

Typically,

$$BW_{video} = \frac{1}{10} f_{in_min} = \frac{1}{10} \times 90\,pf \times 10^6 = 9\,MHz$$

$$C_{LPF} = \frac{1}{2\pi \times 1.5\times10^3 \times 9\times10^6} - (3.5\times10^{-12}) \approx -2.32\,pf$$

Neg which means req BW_{video} is faster than what the AD8317 is capable of

So best to leave CLPF open? No!!! For a smoother RF pdBm to DC Vout value... Better to make the window wider for smoother, human readable behaviour → Eg Pico Telemetry long packet 150ms, short packet 15ms, BW_{video} has to be able to respond to short packets... Rise and settle within 15ms... Let's make it 10ms [tolerance]. In STM32 FW, short packets are averaged 100 times → $\frac{15ms}{100} = 0.1ms$ ∴ $\frac{1}{0.1ms} = 10kHz$ → $\boxed{C_{LPF} = 10nF}$

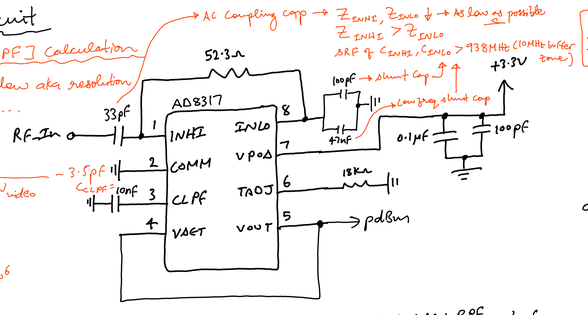

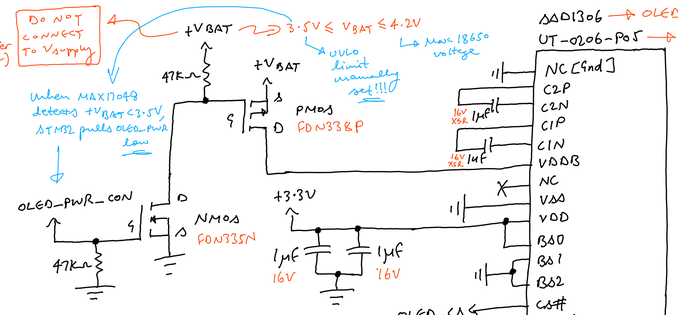

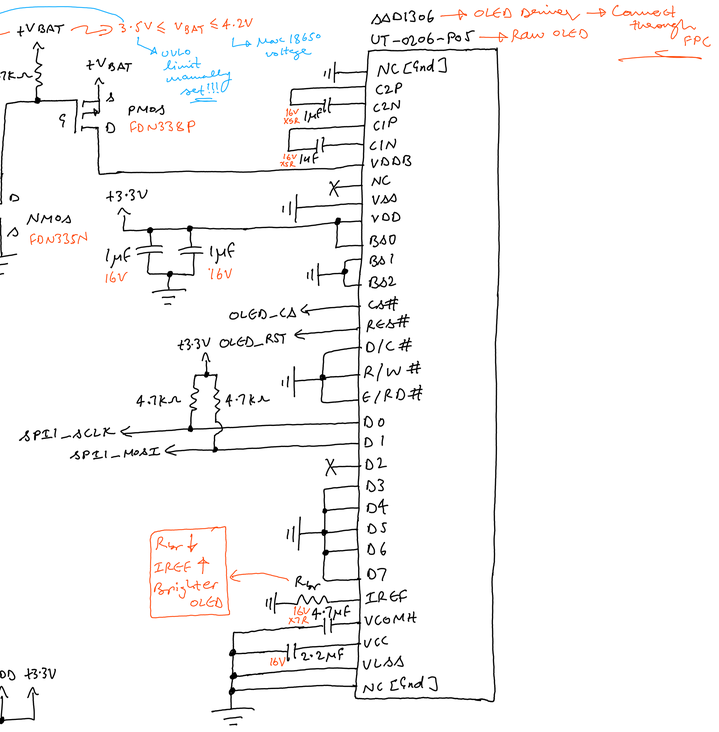

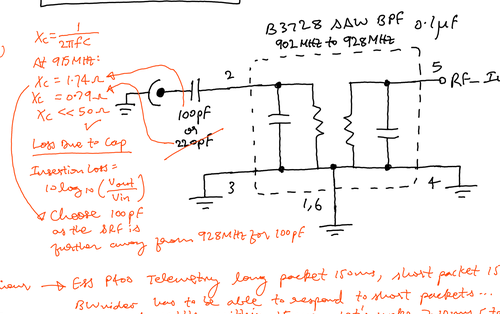

$X_C = \frac{1}{2\pi fC}$

At 915MHz:

$X_C = 1.74\Omega$

$X_C = 0.79\Omega$

$X_C \ll 50\Omega$

Loss due to Cap

Insertion Loss = $10\log_{10}\left(\frac{V_{out}}{V_{in}}\right)$

Choose 100pf as the SRF is further away from 928MHz for 100pf

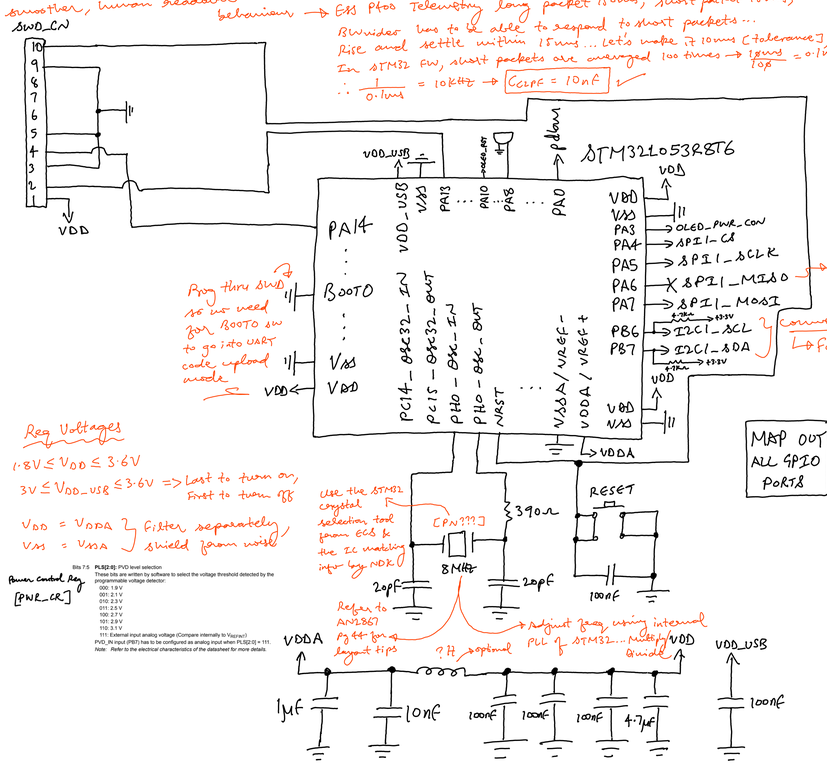

Reg Voltages

$1.8V \le V_{DD} \le 3.6V$

$3V \le V_{DD_USB} \le 3.6V$ => Last to turn on, First to turn off

$V_{DD} = V_{DDA}$ } filter separately, shield from noise
$V_{SS} = V_{SSA}$

Power Control Reg [PWR_CR]

Bits 7:5 **PLS[2:0]:** PVD level selection
These bits are written by software to select the voltage threshold detected by the programmable voltage detector:
000: 1.9 V
001: 2.1 V
010: 2.3 V
011: 2.5 V
100: 2.7 V
101: 2.9 V
110: 3.1 V
111: External input analog voltage (Compare internally to V_{REFINT})
PVD_IN input (PB7) has to be configured as analog input when PLS[2:0] = 111.
Note: Refer to the electrical characteristics of the datasheet for more details.

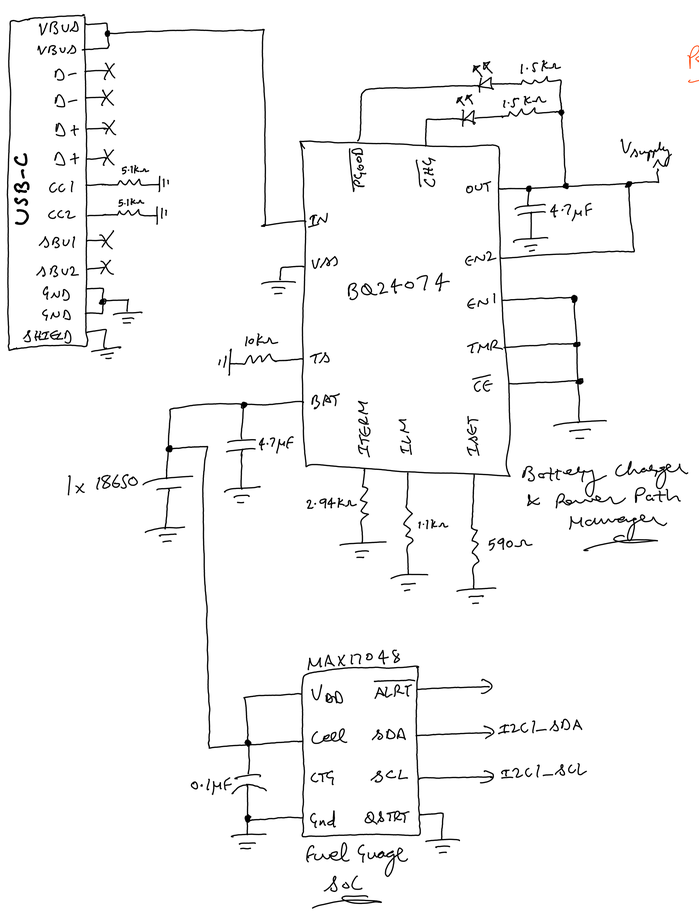

Power Supply Design Requirements

Supply Voltage = 5V [from USB]

Fast charge current (I_{CHG}) = Max 1.8A But... Limit to $\boxed{1A}$ for now → Easier PCB layout → Balanced Trade Offs

→ Panasonic NCR18650B
0.5C charge rate
3.6 Ah rated
∴ Max charge rate = 3.6 × 0.5 = 1.8A

Input current limit (I_{I_MAX}) = Max 3A for Anker Plug But... Limit to $\boxed{1.5A}$ for now

Termination Current Threshold (I_{TERM}) = Typically 10 to 12% of 18650 charge current = 110mA

Safety Timer Duration = Not Req

TS – Batt temp sense = Not Req

Based on ↑ params,

$R_{ISET} = K_{ISET} / I_{CHG}$

K_{ISET} → 890Ω [from elec. char. table]; I_{CHG} → 1.5A

$= 890/1.5 = 590\Omega$

$R_{ILIM} = K_{ILIM} / I_{I_MAX}$

K_{ILIM} → 1550Ω [from elec. char. table]; I_{I_MAX} → 1.5A

$= 1550/1.5 \approx 1033.33\Omega \approx 1k\Omega$

TI recommended range: 1.1kΩ ≤ R_{ILIM} ≤ 8kΩ

I_{chg} ≈ 1.4A

Round up to 1.1kΩ

$R_{ITERM} = \frac{I_{TERM} \times R_{ISET}}{0.030}$

$I_{TERM} = 0.1 \times 1.5 = 0.15A$

$= \frac{0.15 \times 590}{0.030} \approx 2950\Omega = 2.95k\Omega \approx 2.94k\Omega$ common val

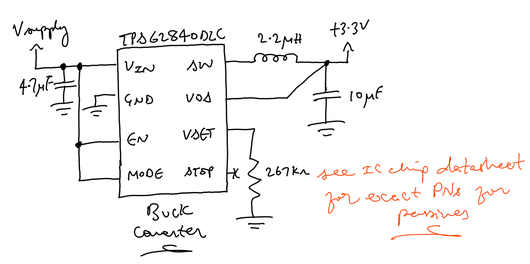

see IC chip datasheet for exact PNs for passives