جامعة حفر الباطن
University of Hafr Al Batin

Lecture 1: Review of Network Concepts

Objectives

- The Layering Concept
- OSI Model
- TCP/IP Protocol Suite
- Protocols in TCP/IP Layers
- Addressing in TCP/IP

Data Communication

- **Data Communication:** Exchange of data between devices via a form of transmission media.
- The **effectiveness** of a data communications system depends on **four fundamental characteristics**:
  1. **Delivery**: The system must deliver data to the correct destination.
     - Data must be received by the intended device or user and *only* by that device or user.
  2. **Accuracy:** The system must deliver the data accurately.
     - Data that have been altered in transmission and left uncorrected are unusable.
  3. **Timeliness:** The system must deliver data in a timely manner.
     - Data delivered late are useless.
  4. **Jitter:** refers to the variation in the packet arrival time.
     - It is the uneven delay in the delivery of audio or video packets.

Data Communication System

- A data communications system has five components:

1. **Message:** the information (data) to be communicated.
2. **Sender:** the device that sends the data message.
3. **Receiver:** the device that receives the message.
4. **Transmission medium:** the physical path by which a message travels from sender to receiver.
5. **Protocols:** a set of rules that govern data communications

Data Flow

- Communication between two devices can be:
  1. Simplex
  2. Half-Duplex
  3. Full-Duplex

Data Flow

1. Simplex Data Flow:

- The communication is **unidirectional**, as on a **one-way** street.
- Only one of the two devices on a link can transmit; the other can only receive.
- Example:
  - Keyboards
  - Radio and television broadcasts.

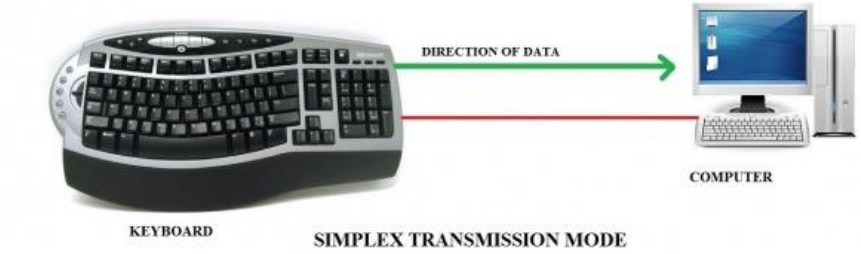

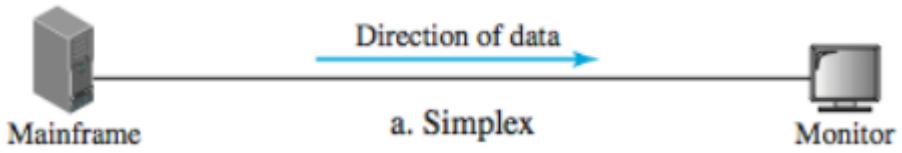

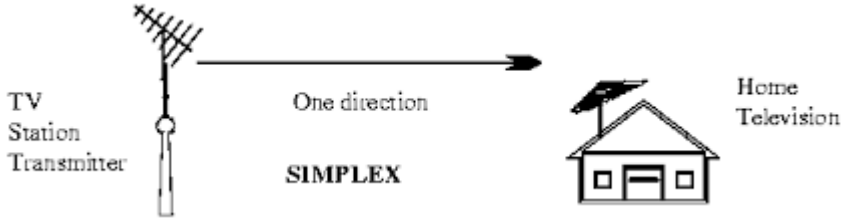

Data Flow

2. Half-Duplex Data Flow:

- Each end can both transmit and receive, but **not at the same time**.
- When one device is sending, the other can only receive, and vice versa.
- Examples:
  - Walkie-talkies

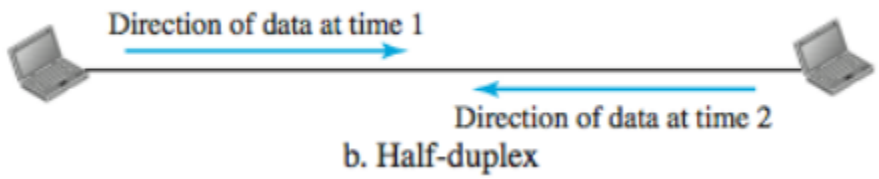

b. Half-duplex

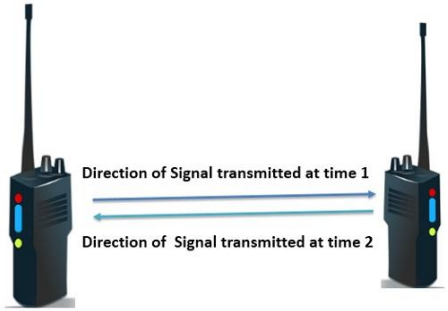

Data Flow

3. Full-Duplex Data Flow:

- Both ends can transmit and receive simultaneously.
- It is like a two-way street with traffic flowing in both directions at the same time.
- Examples:
  - The telephone network.

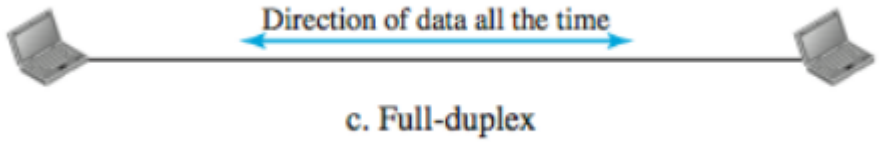

c. Full-duplex

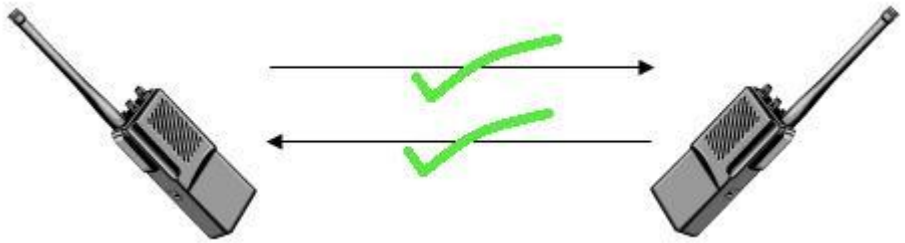

Networks

- A network is a set of nodes (or devices) connected by communication link(s).

- A **node** can be a computer, printer, or any other device capable of sending and/or receiving data generated by other nodes on the network.

Network Criteria

- A network must be able to meet a certain number of criteria. The most important of these are:

1. Performance:

- Performance can be measured in many ways, including:
  - **Transit time:** the amount of time required for a message to travel from one device to another.
  - **Response time:** the elapsed time between an inquiry and a response.
- The performance of a network **depends on a number of factors**, including:
  1. Number of users.
  2. Type of transmission medium.
  3. Capabilities of the connected hardware.
  4. Efficiency of the software.

Network Criteria

2. Reliability:

- Network reliability is measured by:
  - Frequency of failure
  - Time it takes to recover from a failure
  - The network's robustness in a catastrophe.

3. Security:

- Network security issues include:
  - Protecting data from unauthorized access.
  - Protecting data from damage.
  - Implementing policies for recovery from breaches and data losses.

Network Physical Structures

There are two possible connection types:

1. Point-to-point connections:

- Provides a dedicated link or between two devices.
- The entire capacity of the link is reserved for those two devices
- Example: the TV and the remote.

2. Multipoint connections:

- More than two devices are sharing a link.
- The entire capacity of the link is either shared spatially or temporally.
  - **Spatially:** every computer shares a **specific space of the link**.
  - **Temporally:** each computer shares the link **for a specific time** when being used.

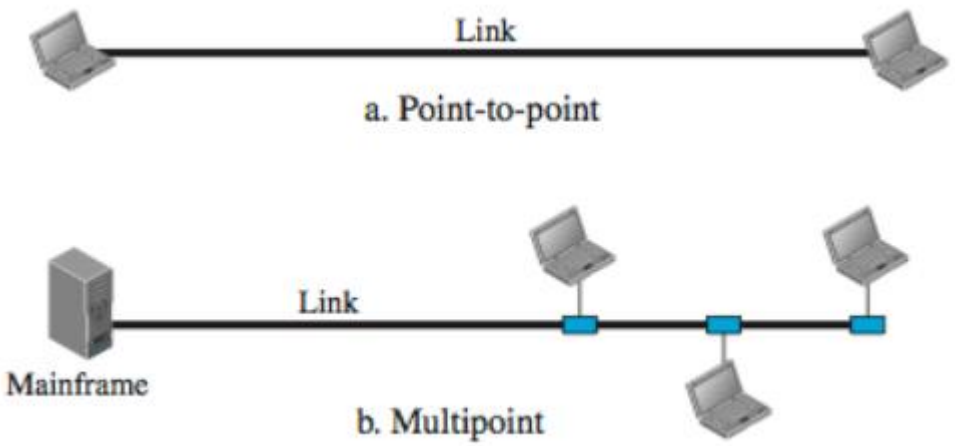

Physical Topology

- **Physical Topology:** the ways in which networks are laid out physically.
- Two or more devices connect to a link
- Two or more links form a **topology**.
- A linking device in a network is called a **node.**
- There are **four basic types of topologies**:
  1. Mesh Topology
  2. Star Topology
  3. Bus Topology
  4. Ring Topology

Mesh Topology

- every device has a dedicated point-to-point link to every other device.
- **Advantages:**
  - Avoid traffic since each link can carry its own data and none are being shared.
  - If one link breaks, the rest of the network is still functional
  - Privacy: only the dedicated device receives the message.
  - Easy to detect a problem in the network.
- **Disadvantages:**
  - Need a lot of cables.
  - Need a lot of space.
  - More expensive: more cables much cost

$n = 5$
10 links.

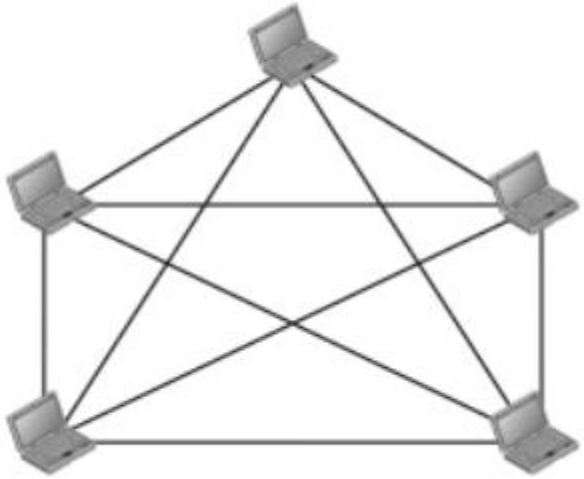

Star Topology

- each device is connected to a hub through a dedicated point-to-point link.
  - The devices are not directly linked to each other.
- **Advantages:**
  - Less expensive than mesh
  - Easy to install, easy to configure
  - If one link fails the network can still function.
- **Disadvantages:**
  - Everything depends on the hub.

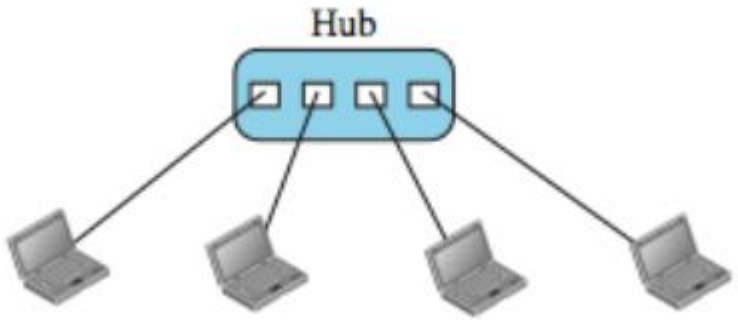

Bus Topology

- Multipoint connection. One long cable acts as a backbone; other devices are connected through a drop line and a tap in the link.
  - **Drop line:** a connection running between a device and a main cable.
  - **Tap:** a physical device that punctures the cable and connects to it.
- **Advantages:**
  - Easy to install
  - Minimal Cable.
- **Disadvantages:**
  - Difficult reconnection.
  - Difficult to find the problem.
  - Difficult to add new devices.
  - Any break stops all transmission of data.

Difficult reconnection
Difficult to find the problem
Difficult to add new devices
Break stops all transmission of data

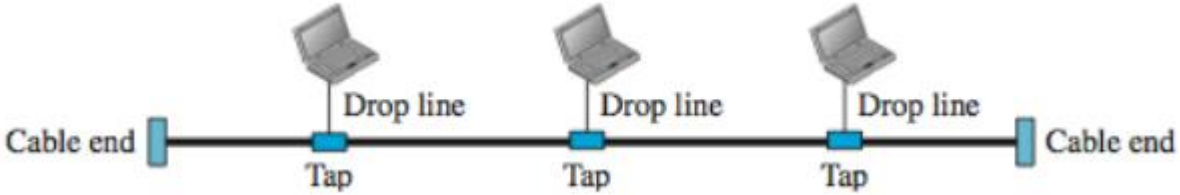

Ring Topology

- devices has a dedicated point-to-point connection with only the two devices on either side of it.
  - Each device has a **repeater** that passes the data received that is intended for another device along.
- **Advantages:**
  - Easy to install
  - Easy to reconfigure
  - Easy to detect a problem
- **Disadvantages:**
  - Break means the whole system is dead.

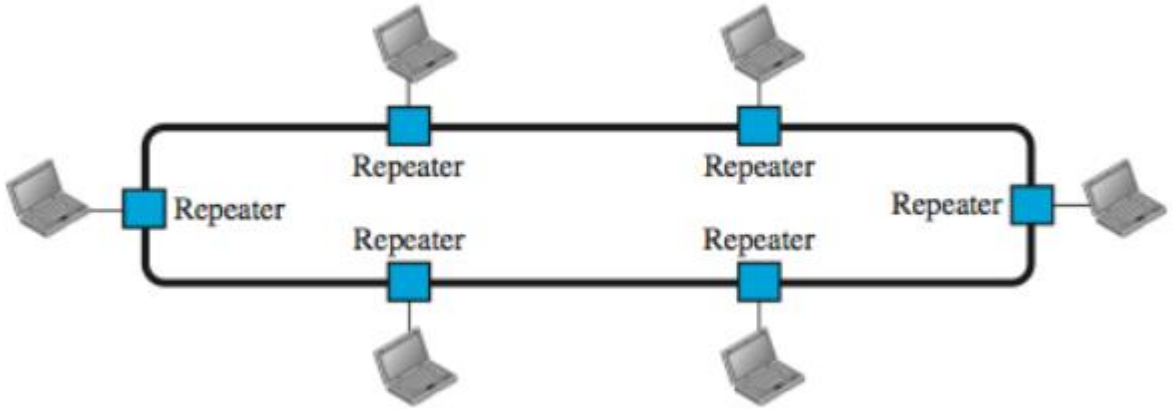

Network Types

- The criteria for differentiating networks is difficult and sometimes confusing
- We use criteria such as size, geographical coverage and ownership.
- We have two main categories:
  1. Local Area Network (LAN)
     - Privately owned
     - Can be a network in a home, office, building or campus
  2. Wide Area Network (WAN)
     - Can be a network spanning a town, state, or different country.
     - WAN is created by the communication companies and leased by an organization

Switching

- The internet is a switched network in which a switch connects at least two links together.
- A switch needs to forward data from a network to another network when required

- There are two types of switched network:
  1. Circuit-switched networks
  2. Packet-switched network

Circuit-switched Network

- A dedicated connection called circuit is always available between the two end systems.
- The switch can only make it active or inactive.

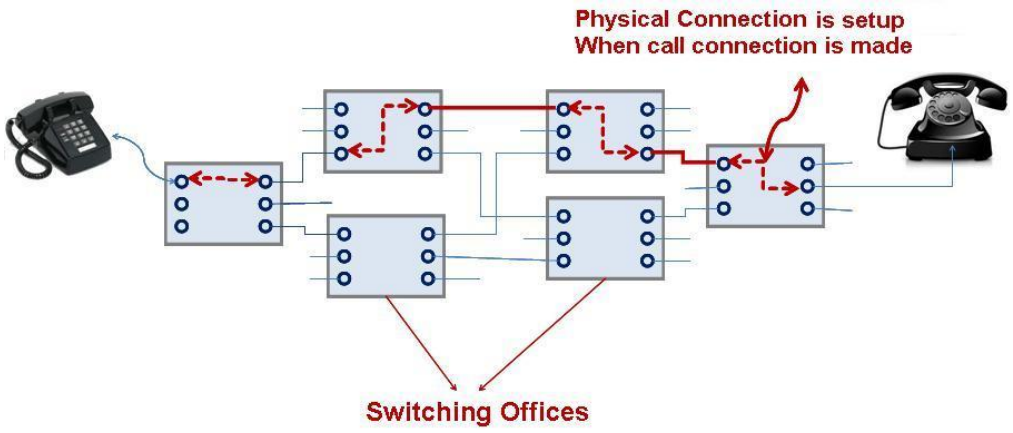

Packet-switched Network

- In a computer networks, communication between two ends is done in a block of data called **packets**. Here exchange of individual packet is done between two computers
- The **Switch** function for both **storing** and **forwarding** packets.
- A packet is an **independent** entity that can be stored and send later.
- A router in a packet-switched network has a queue that can store and forward packets.

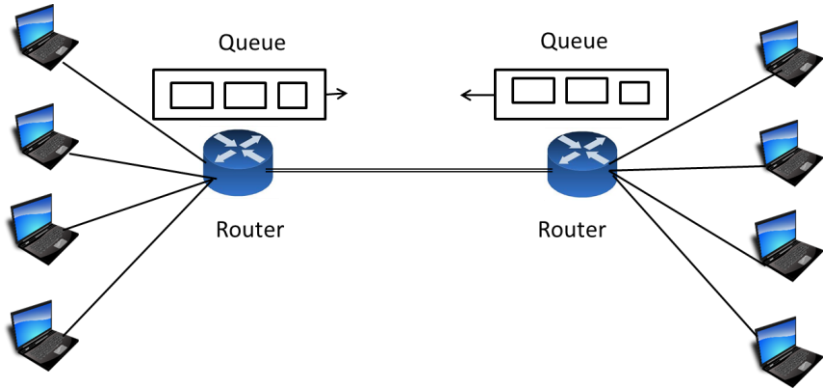

Circuit Switching vs. Packet Switching
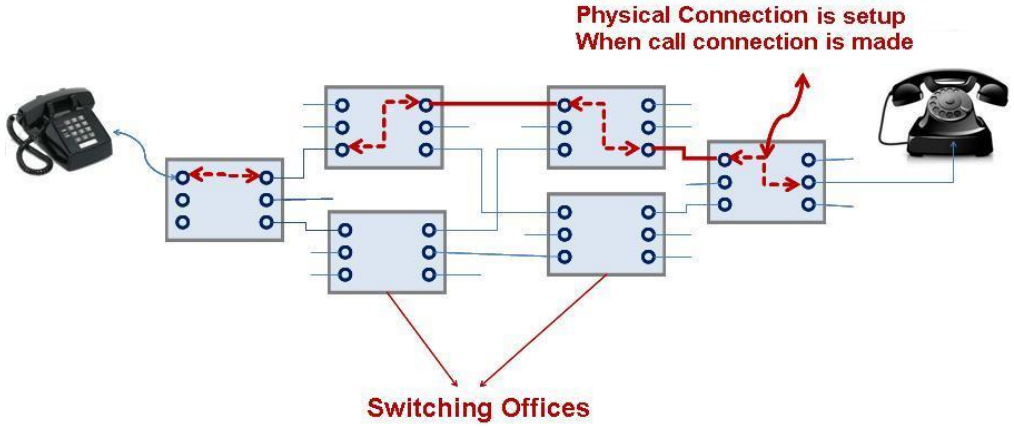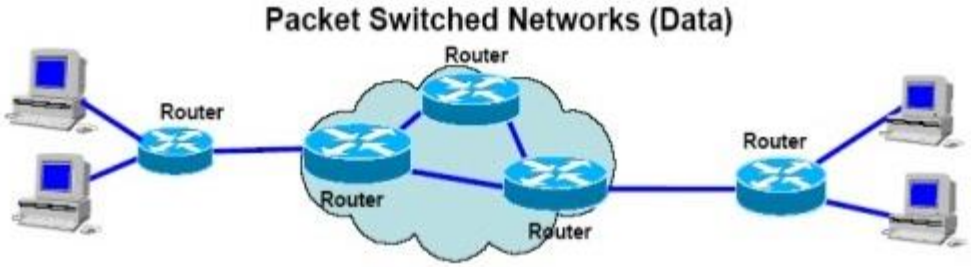
Circuit Switching	Packet Switching
Physical path between source and destination	No physical path
All packets use same path	Packets travel independently
Reserve the entire bandwidth in advance	Does not reserve
Bandwidth Wastage	No Bandwidth wastage
No store and forward transmission	Supports store and forward transmission