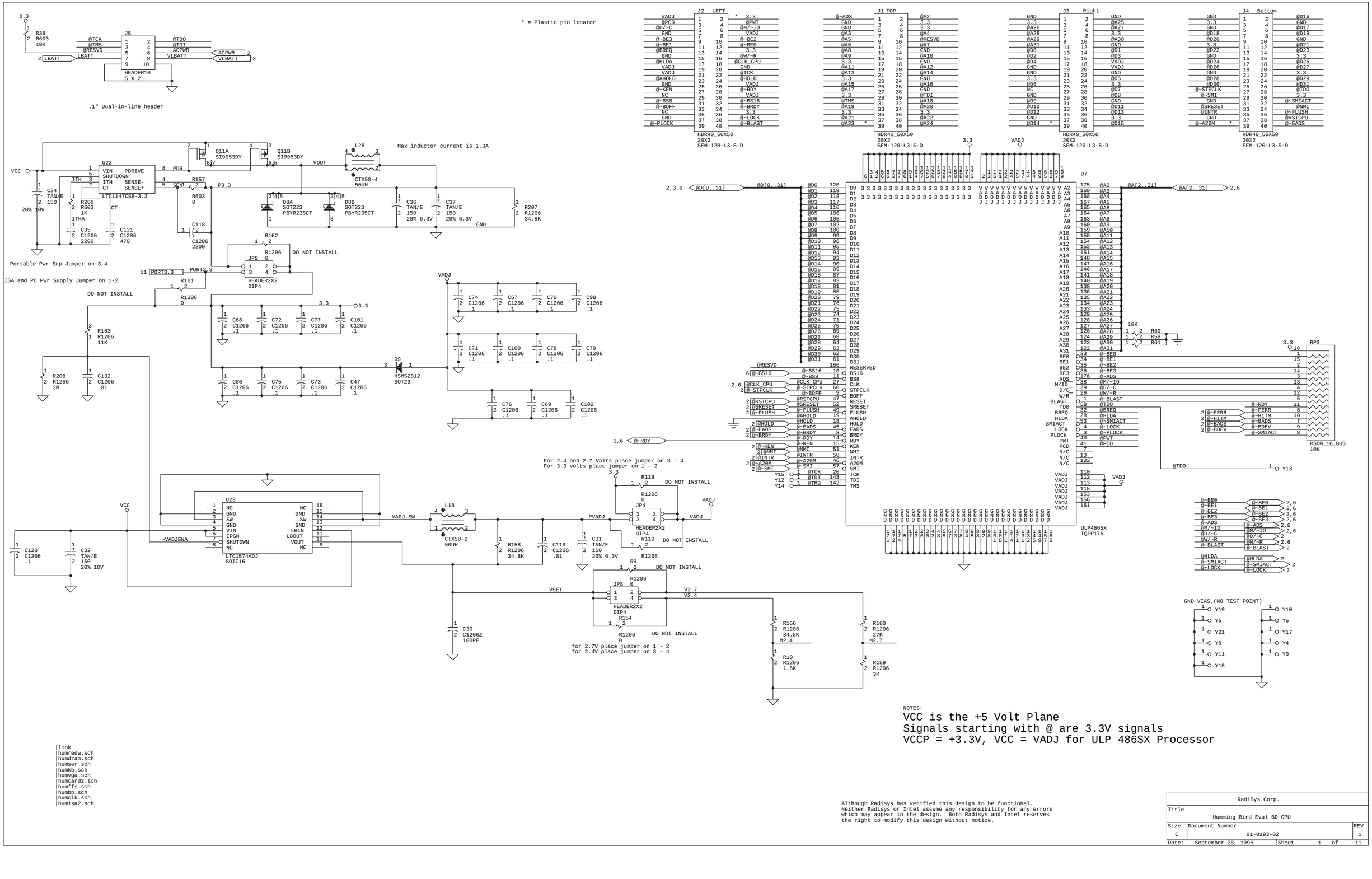
* = Plastic pin locator
J2 LEFT
J1 TOP
J3 Right
J4 Bottom
HDR40_50X50
20X2
SFM-120-L3-S-D
.1" Dual-in-line header
HEADER10
5 X 2
J5
LTC1147CS8-3.3
Q11A SI9953DY
Q11B SI9953DY
CTX50-4
50UH
Max inductor current is 1.3A
D8A SOT223 PBYR235CT
D8B SOT223 PBYR235CT
Portable Pwr Sup Jumper on 3-4
ISA and PC Pwr Supply Jumper on 1-2
DO NOT INSTALL
HEADER2X2
DIP4
JP9
HSMS2812 SOT23
U7
ULP486SX
TQFP176
RSOM_16_BUS
10K
For 2.4 and 2.7 Volts place jumper on 3 - 4
For 3.3 volts place jumper on 1 - 2
for 2.7V place jumper on 1 - 2
for 2.4V place jumper on 3 - 4
U23
LTC1574ADJ
SOIC16
CTX50-2
50UH
GND VIAS,(NO TEST POINT)
NOTES:
VCC is the +5 Volt Plane
Signals starting with @ are 3.3V signals
VCCP = +3.3V, VCC = VADJ for ULP 486SX Processor
Although Radisys has verified this design to be functional.
Neither Radisys or Intel assume any responsibility for any errors
which may appear in the design. Both Radisys and Intel reserves
the right to modify this design without notice.
|link
|humredw.sch
|humdram.sch
|humser.sch
|humkb.sch
|humvga.sch
|humcard2.sch
|humffs.sch
|humbb.sch
|humclk.sch
|humisa2.sch
RadiSys Corp.
Title
Humming Bird Eval BD CPU
Size C
Document Number 01-0193-02
REV 1
Date: September 28, 1995
Sheet 1 of 11

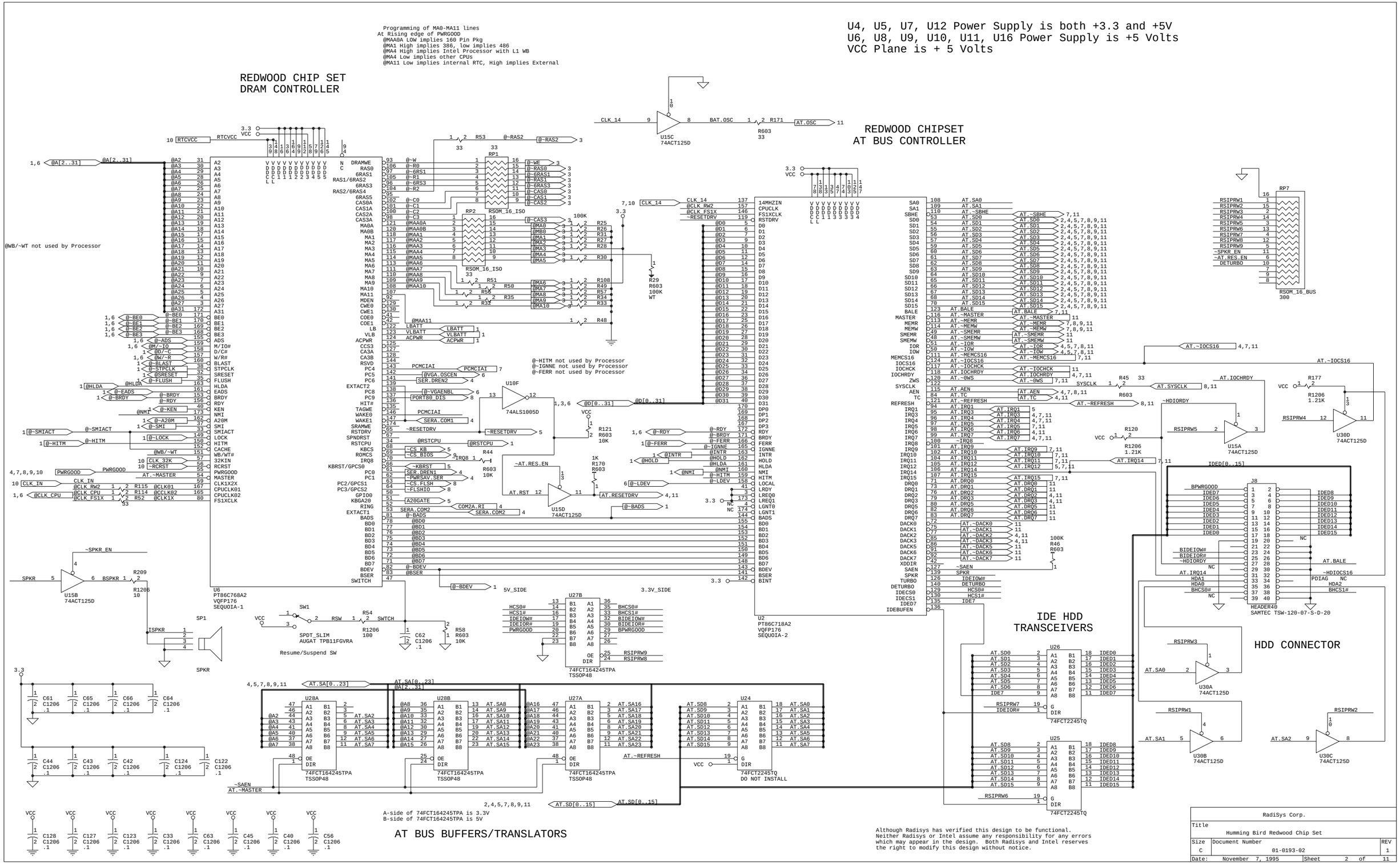

Although Radisys has verified this design to be functional.
Neither Radisys or Intel assume any responsibility for any errors which may appear in the design. Both Radisys and Intel reserves the right to modify this design without notice.

RadiSys Corp.		
Title	Humming Bird Redwood Chip Set	
Size: C	Document Number: 01-0193-02	REV: 1
Date: November 7, 1995	Sheet 2 of 11	

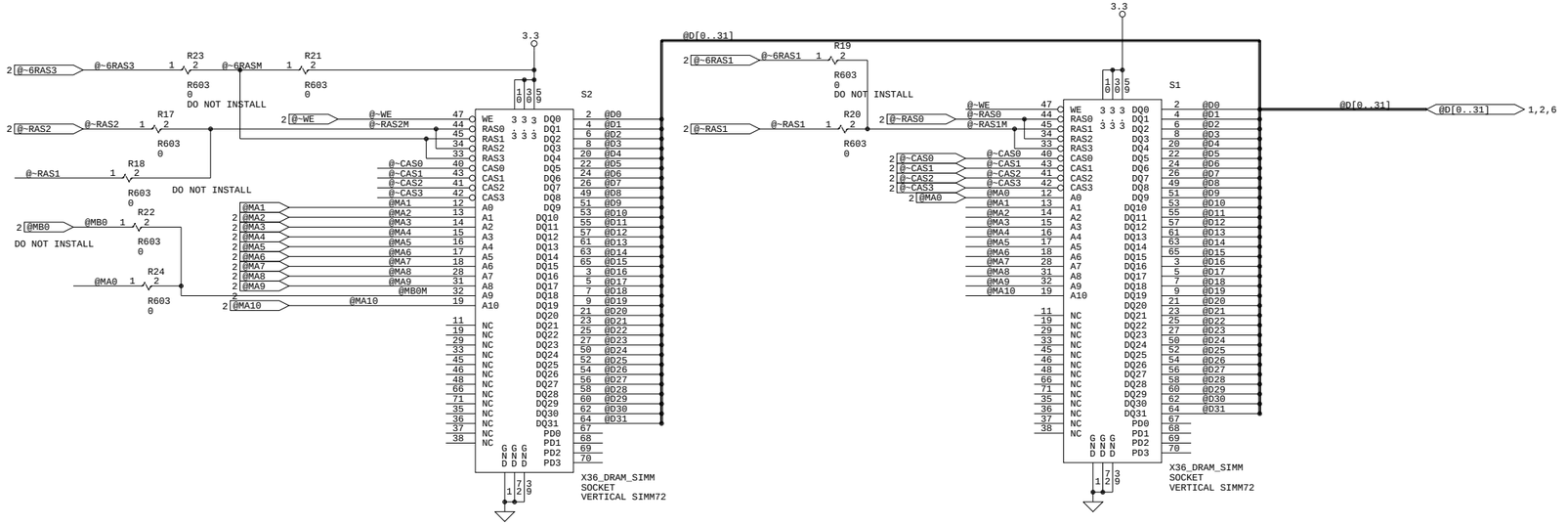

FLASH DRAM SOCKET

Socket Closest to Processor

DRAM SOCKET

Socket Closest to Edge of Board

Power Supply for SIMM Sockets is +3.3 Volts

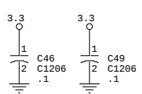

Although Radisys has verified this design to be functional.
Neither Radisys or Intel assume any responsibility for any errors
which may appear in the design. Both Radisys and Intel reserves
the right to modify this design without notice.

RadiSys Corp.		
Title: HUMBIRD DRAM		
Size: C	Document Number: 01-0193-02	REV: 1
Date: September 28, 1995	Sheet 3 of 12	

DTE PORT		DCE PORT	
OUT TXD	-->	IN	TXD
IN RXD	<--	OUT	RXD
OUT RTS	-->	IN	RTS
IN CTS	<--	OUT	CTS
OUT DTR	-->	IN	DTR
IN DSR	<--	OUT	DSR

On a DCE Port the RXD/TXD, CTS/RTS,and DTR/DSR are swapped.
Thus the RXD signal from a DCE port is an output
and the TXD signal is an input.

The COM1.DCD and COM1.RI are outputs
normally from a standard modem.

DCE SERIAL PORT

FEMALE_DB9 P5

COM1 SERIAL PORT DRIVER

U31

COM2 Serial Port Driver

U19

DTE SERIAL PORT

(Just like standard PC Connector)

P4 MALE_DB9

Super I/O Chip

U29 FDC37C665IR 100QFP

Serial Port Driver

FLOPPY DRIVE CONNECTOR

J11 HEADER34 DO NOT INSTALL

Parallel Port

J10 HEADER26

U13,U14,U15 Power Supply = +5 Volts
VCC is +5 Volt Plane

Although Radisys has verified this design to be functional.
Neither Radisys or Intel assume any responsibility for any errors
which may appear in the design. Both Radisys and Intel reserves
the right to modify this design without notice.

RadiSys Corporation			
Title: Humming Bird Serial ports			
Size: C	Document Number: 01-0193-02		REV: 1
Date: September 28, 1995	Sheet 4 of 11		

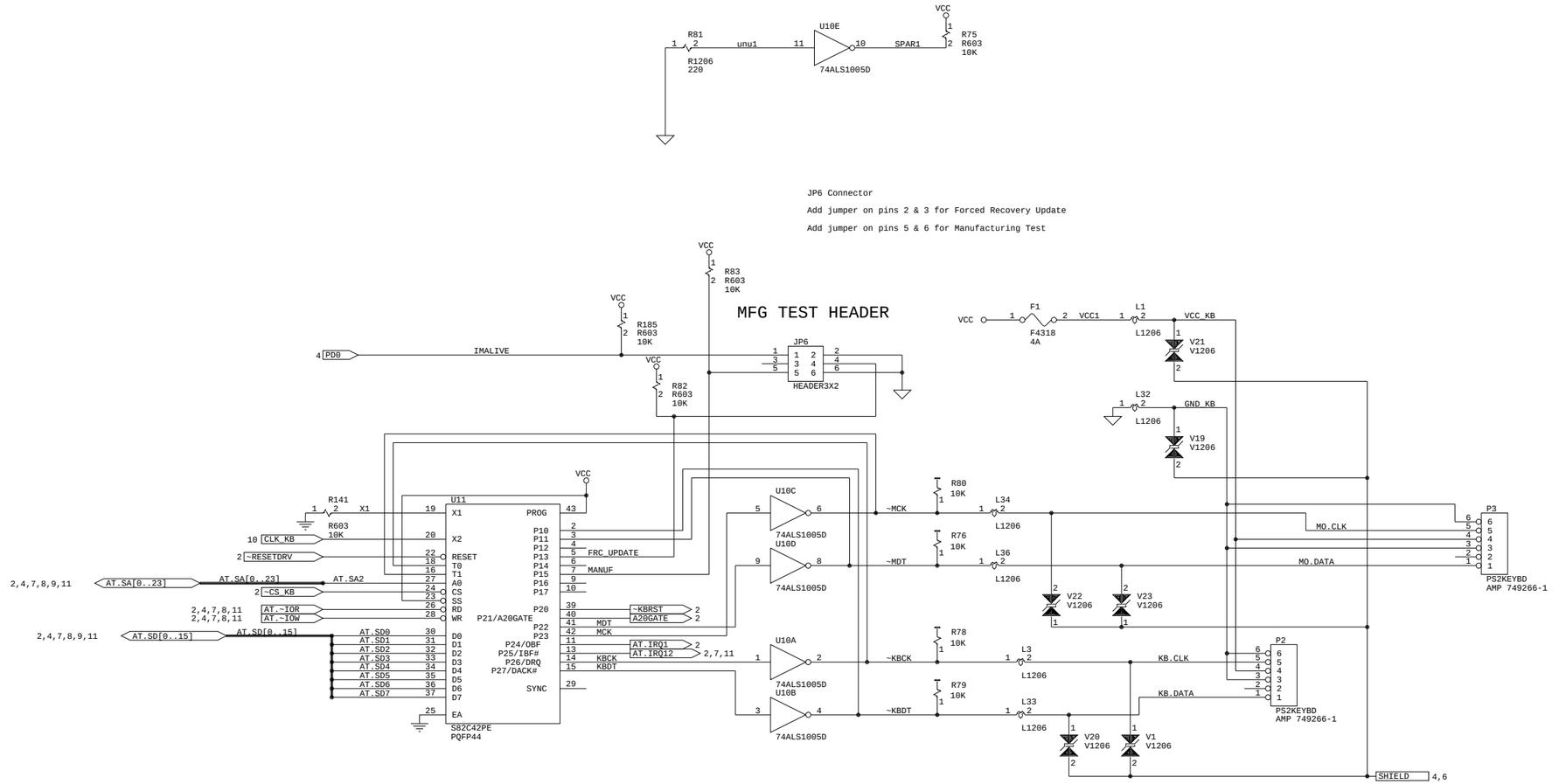

Although Radisys has verified this design to be functional.
Neither Radisys or Intel assume any responsibility for any errors
which may appear in the design. Both Radisys and Intel reserves
the right to modify this design without notice.

RadiSys Corp.		
Title: Humming Bird Keyboard/Mouse		
Size: C	Document Number: 01-0193-02	REV: 1
Date: September 28, 1995	Sheet 5 of 11	

Flat Panel Connector

VGA Controller

Flat Panel Power Supply

PANEL SELECT

VGA Connector

VGA_GND should be connected to GND plane at one location

VFIL_GND should be connected to GND plane at one location.

MFIL_GND should be connected to ground plane at one location.

REF_GND should be connected to ground plane at one location.

VIDPWR Plane is Filtered +5 Volts

U18, U19, U30, U32 Power Supply = +5 Volts

VCC Power Supply = +5 Volt Plane

REF_GND and VGA GND connected together
and connected at one point to GND

DAC Current Reference
(Typically 6.9mA)

Although Radisys has verified this design to be functional.
Neither Radisys or Intel assume any responsibility for any errors
which may appear in the design. Both Radisys and Intel reserves
the right to modify this design without notice.

RADISYS CORPORATION		
Title: Humming Bird Video Display		
Size: C	Document Number: 01-0193-02	REV:
Date: September 28, 1995	Sheet 6 of 11	

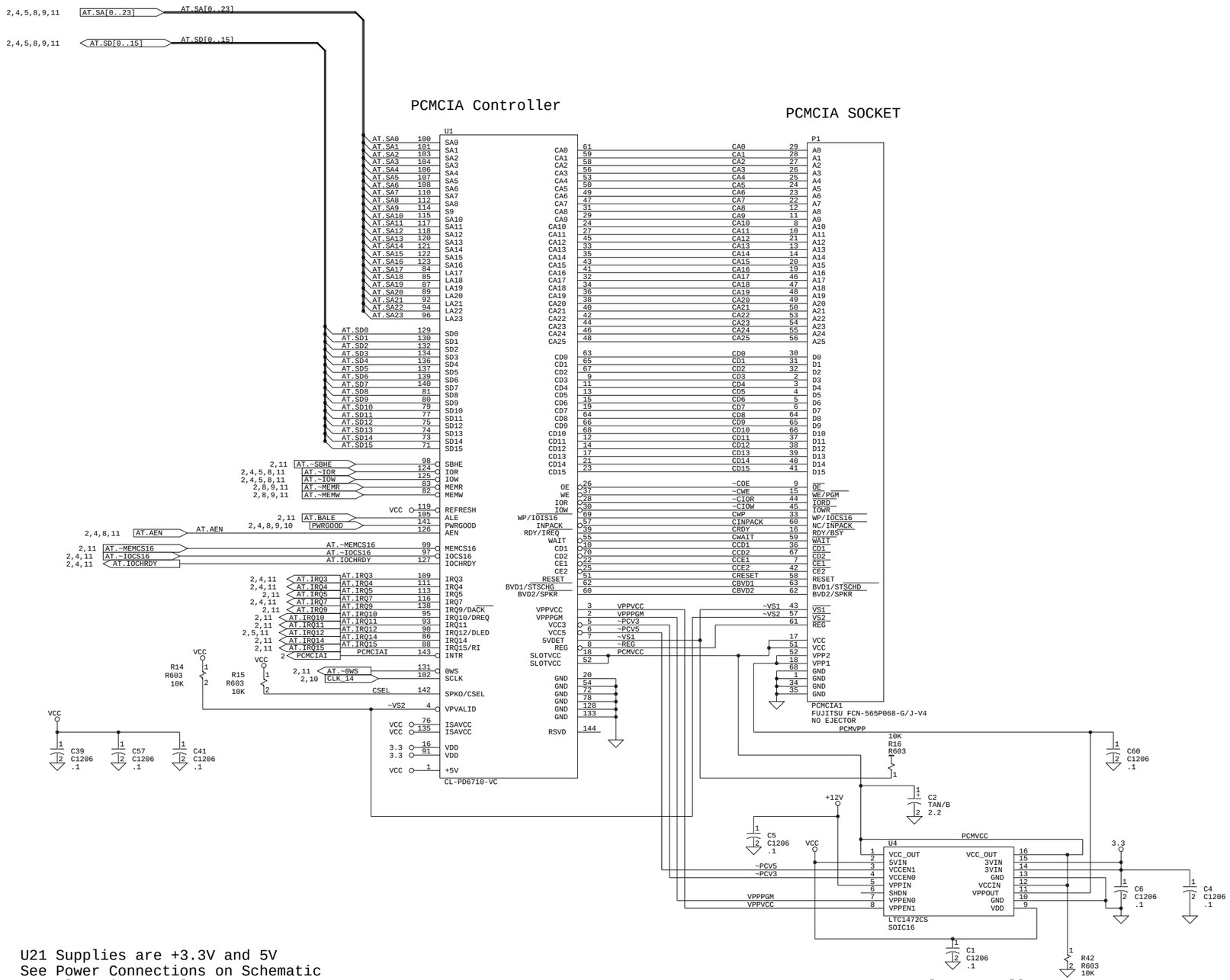

Although Radisys has verified this design to be functional.
Neither Radisys or Intel assume any responsibility for any errors
which may appear in the design. Both Radisys and Intel reserves
the right to modify this design without notice.

RadiSys Corporation			
Title: Humming Bird PCMCIA CKTS			
Size: C	Document Number: 01-0193-02		REV
Date: September 28, 1995	Sheet 7 of 11		

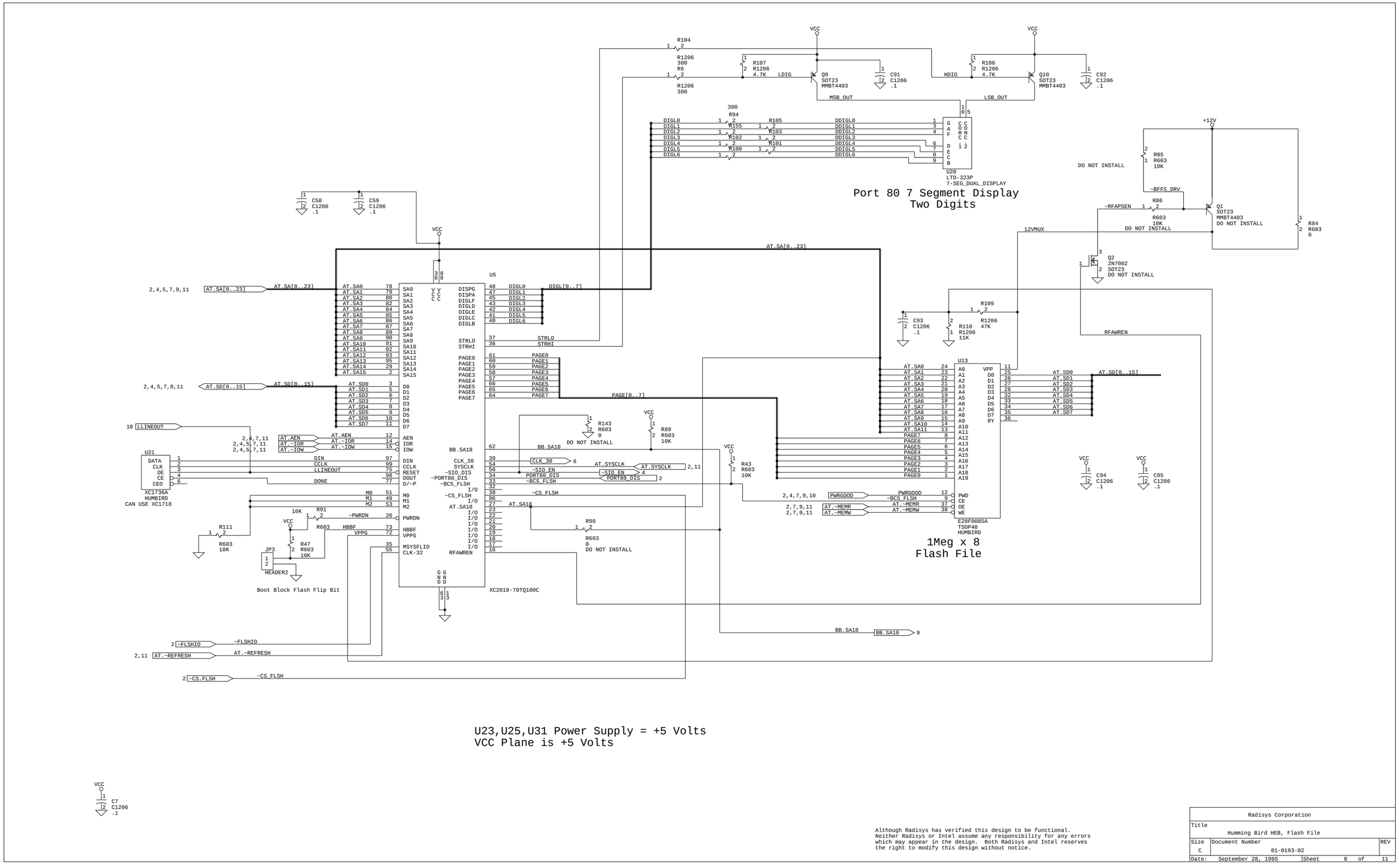

Although Radisys has verified this design to be functional. Neither Radisys or Intel assume any responsibility for any errors which may appear in the design. Both Radisys and Intel reserves the right to modify this design without notice.

Radisys Corporation		
Title: Humming Bird HEB, Flash File		
Size: C	Document Number: 01-0193-02	REV
Date: September 28, 1995	Sheet 8 of 11	

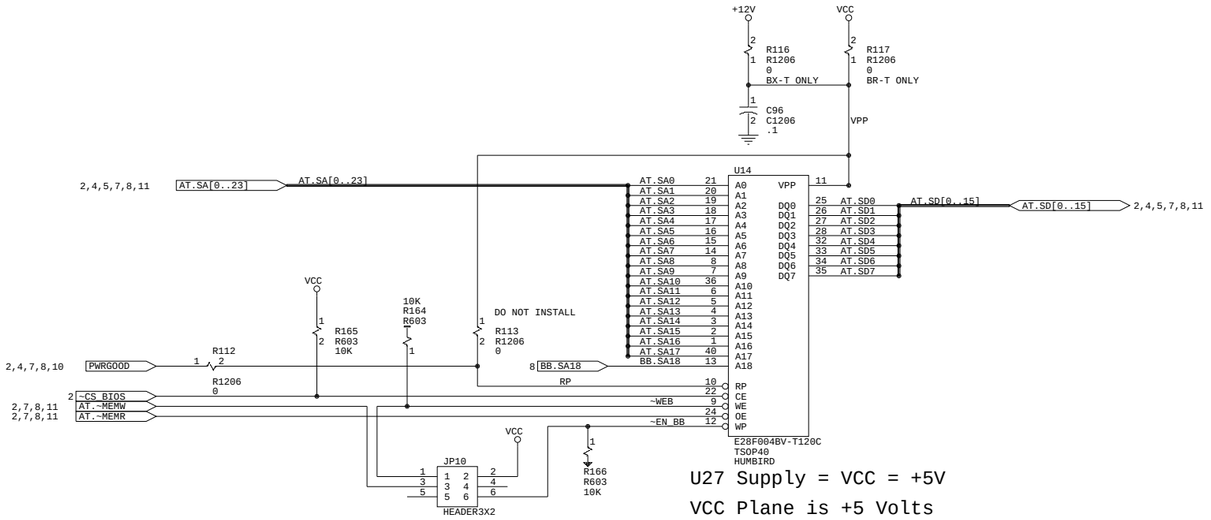

U27 Supply = VCC = +5V

VCC Plane is +5 Volts

Jumpers	Comment
1-3	Write to Flash except Boot Block
1-3 & 2-6	Write to Flash and Boot Block

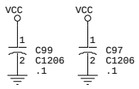

Although Radisys has verified this design to be functional.
Neither Radisys or Intel assume any responsibility for any errors
which may appear in the design. Both Radisys and Intel reserves
the right to modify this design without notice.

RadiSys Corp.		
Title: HEB DRAM and BOOT BLOCK FLASH		
Size: C	Document Number: 01-0193-02	REV: 1
Date: September 28, 1995	Sheet 9 of 11	

MASTER OSCILLATOR

CPU Frequency vs Jumper Settings

SCLK2	SCLK1	SCLK0	FREQ	
0 IN	0 IN	0 IN	4MHz	
0 IN	0 IN	1 OUT	8MHz	
0 IN	1 OUT	0 IN	16MHz	
0 IN	1 OUT	1 OUT	20MHz	
1 OUT	0 IN	0 IN	25MHz	
1 OUT	0 IN	1 OUT	33.3MHz	
1 OUT	1 OUT	0 IN	40MHz	(INVALID)
1 OUT	1 OUT	1 OUT	50MHz	(INVALID)

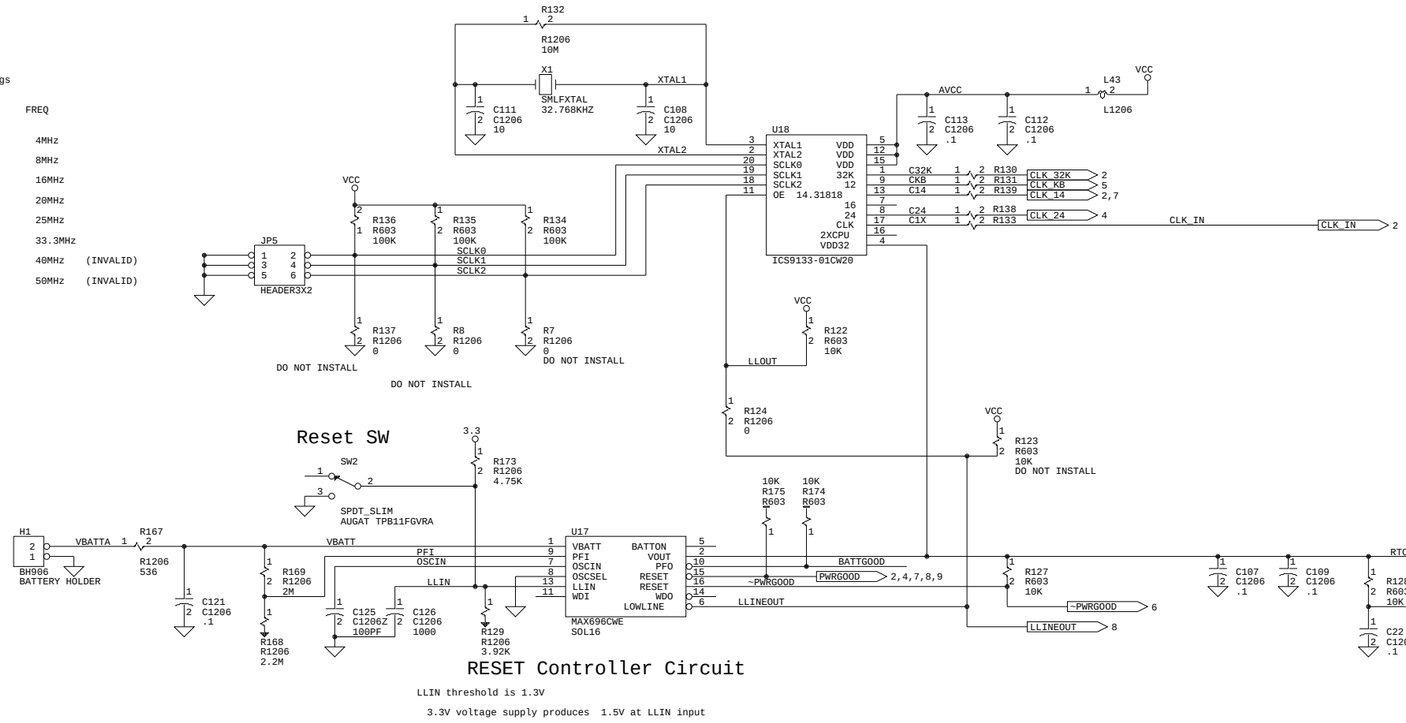

RESET Controller Circuit

LLIN threshold is 1.3V

3.3V voltage supply produces 1.5V at LLIN input

VCC Plane is +5 Volts

U28 Power = +5 Volts

U29 Power = +5 Volts

Although Radisys has verified this design to be functional.
Neither Radisys or Intel assume any responsibility for any errors
which may appear in the design. Both Radisys and Intel reserves
the right to modify this design without notice.

RadiSys Corp.		
Title: Humming Bird ClK/Reset Ckts		
Size: C	Document Number: 01-0193-02	REV: 1
Date: September 28, 1995	Sheet 10 of 11	

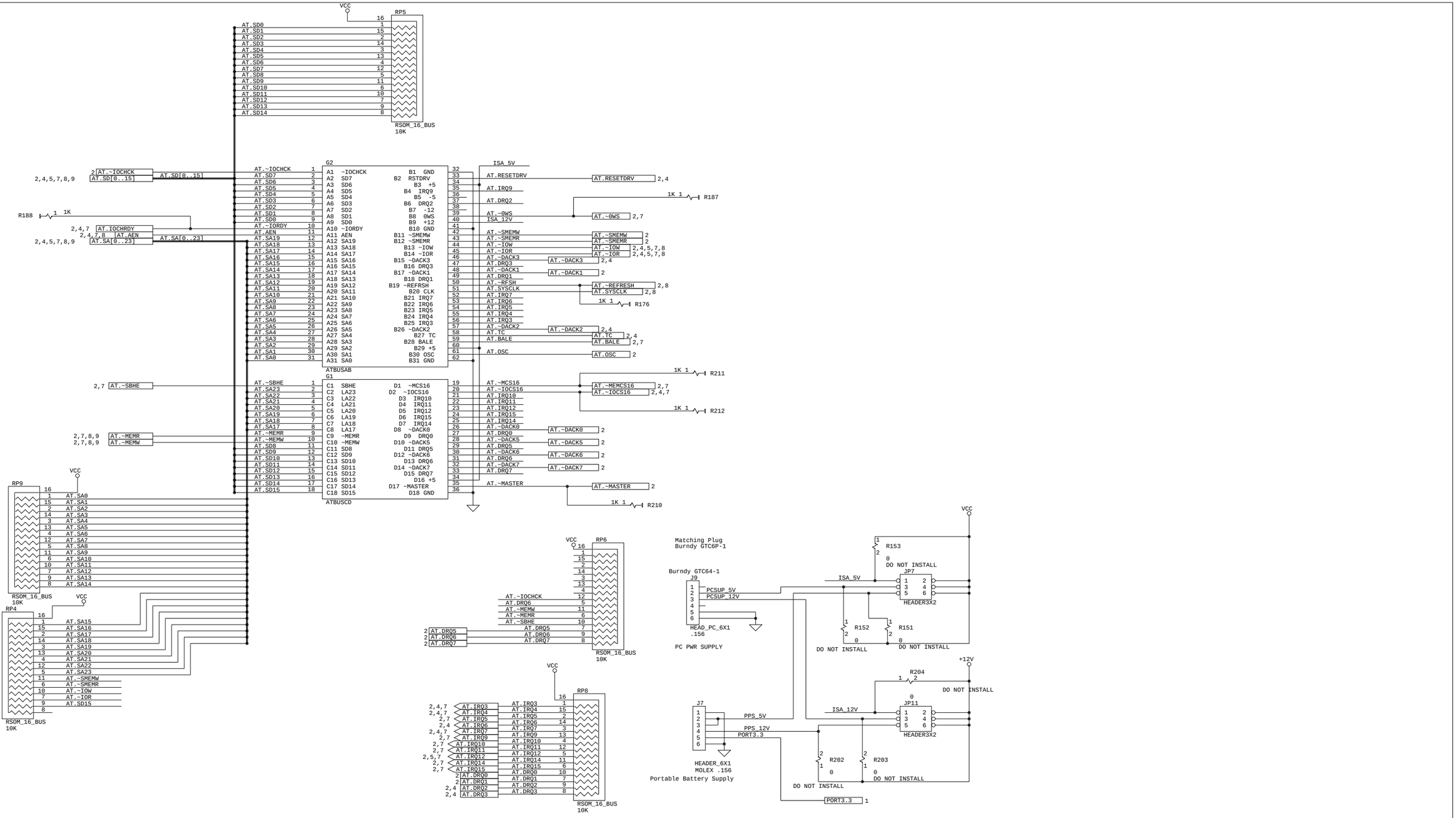

VCC Plane is + 5 Volts

Although Radisys has verified this design to be functional.
Neither Radisys or Intel assume any responsibility for any errors
which may appear in the design. Both Radisys and Intel reserves
the right to modify this design without notice.

RadiSys Corp.		
Title: Humming Bird ISA Circuits		
Size: C	Document Number: 01-0193-02	REV: 0
Date: September 28, 1995	Sheet 11 of 11	

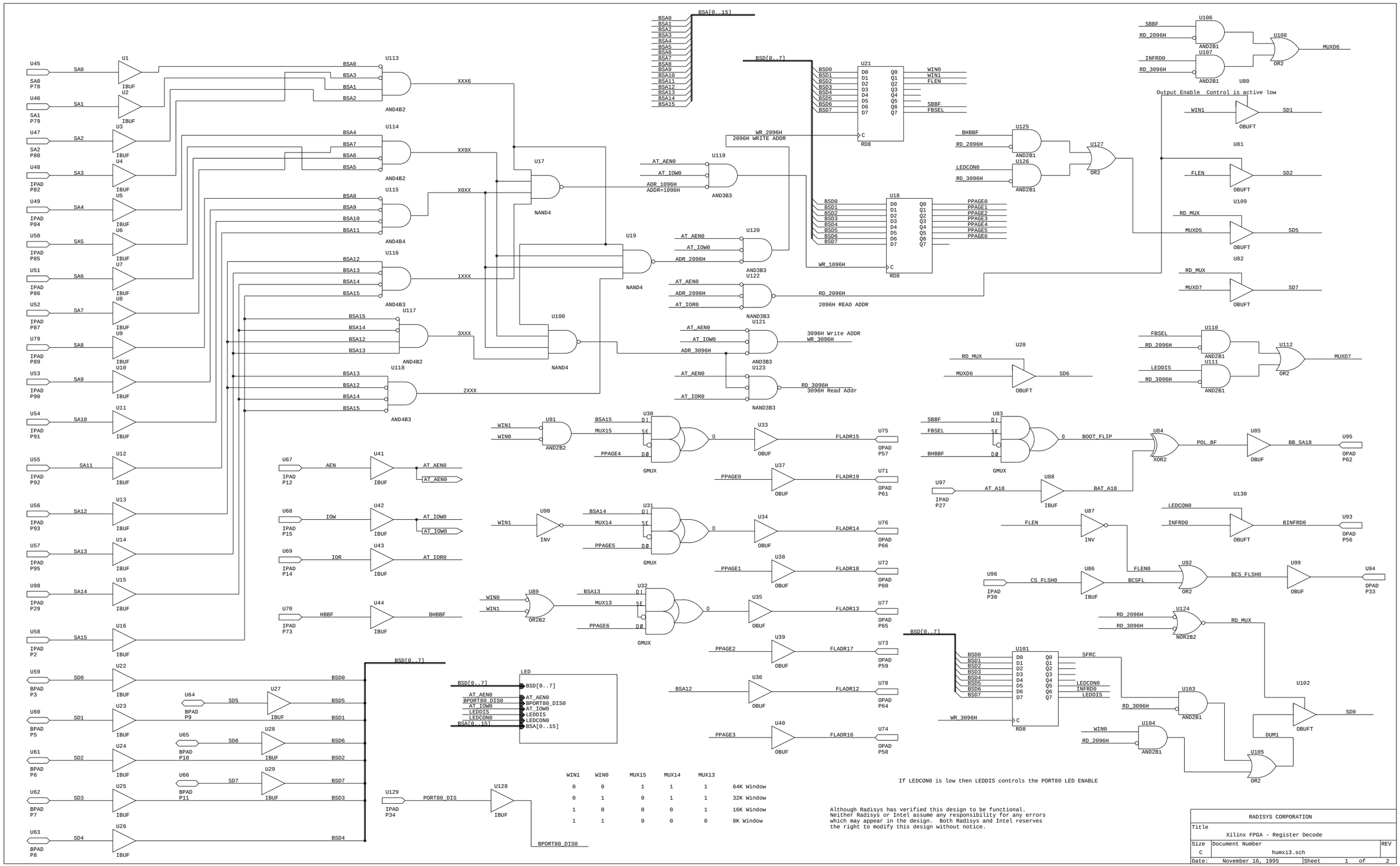

WIN1	WIN0	MUX15	MUX14	MUX13	
0	0	1	1	1	64K Window
0	1	0	1	1	32K Window
1	0	0	0	1	16K Window
1	1	0	0	0	8K Window

If LEDCON0 is low then LEDDIS controls the PORT80 LED ENABLE

Although Radisys has verified this design to be functional.
Neither Radisys or Intel assume any responsibility for any errors which may appear in the design. Both Radisys and Intel reserves the right to modify this design without notice.

RADISYS CORPORATION		
Title: Xilinx FPGA - Register Decode		
Size: C	Document Number: humxi3.sch	REV
Date: November 16, 1995	Sheet 1 of 2	

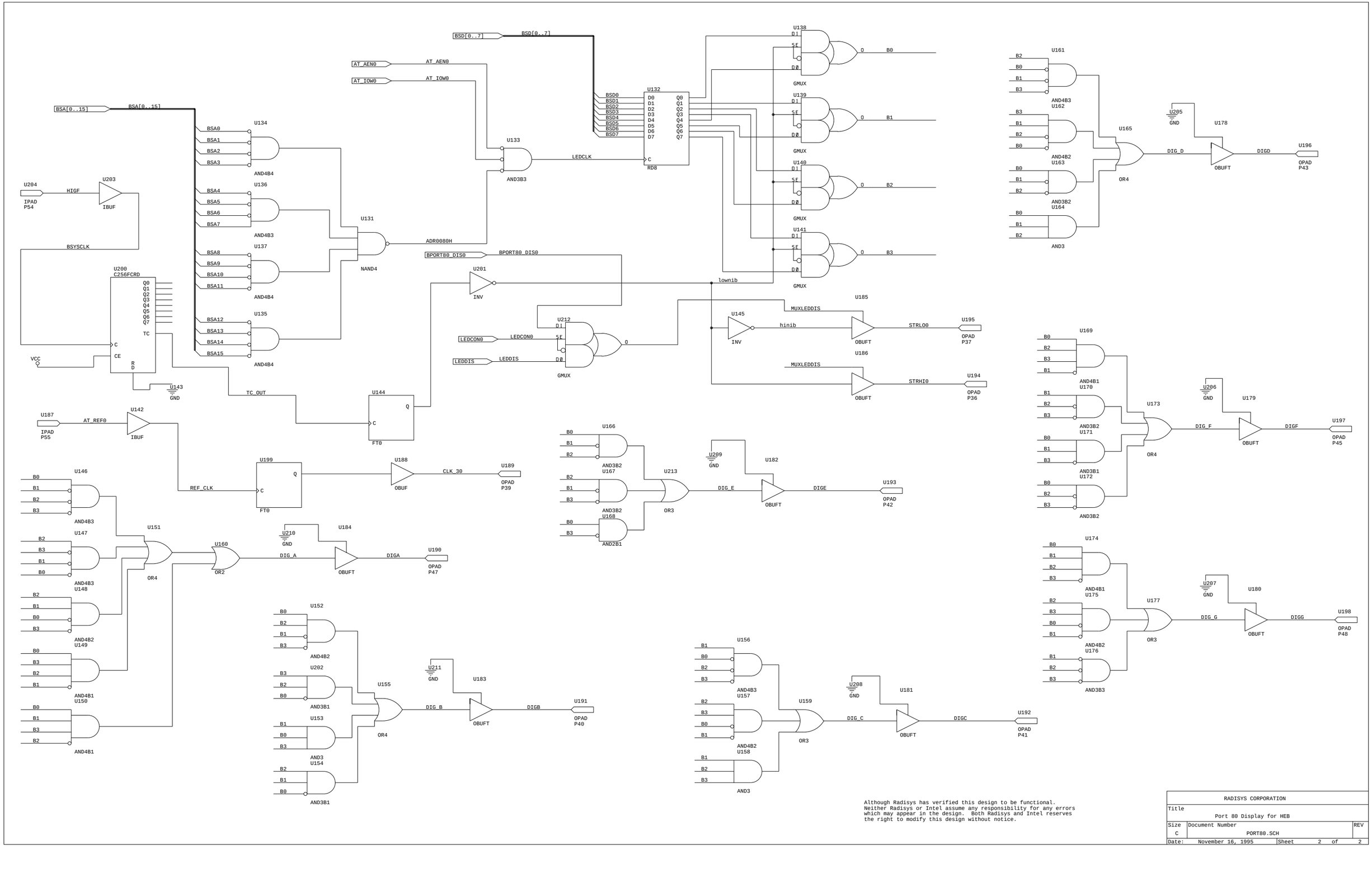

Although Radisys has verified this design to be functional.
Neither Radisys or Intel assume any responsibility for any errors
which may appear in the design. Both Radisys and Intel reserves
the right to modify this design without notice.

RADISYS CORPORATION		
Title: Port 80 Display for HEB		
Size: C	Document Number: PORT80.SCH	REV
Date: November 16, 1995	Sheet 2 of 2	

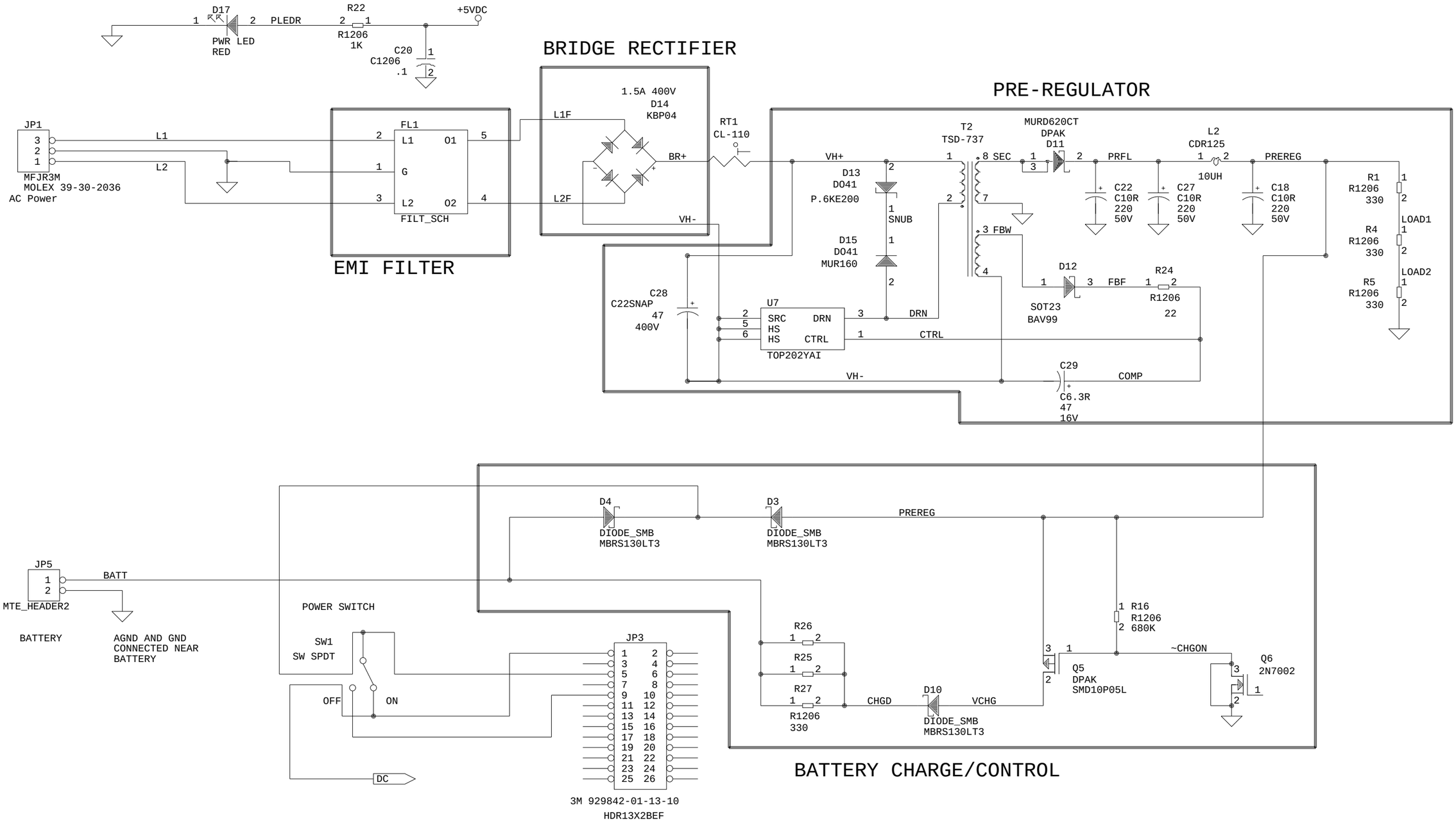

RadiSys Corporation		
Title: Hummingbird Portable Power Supply		
Size: B	Document Number: SOURCE.SCH	REV: 01
Date: November 2, 1995	Sheet 1 of 2	

DC-DC CONTROLLER

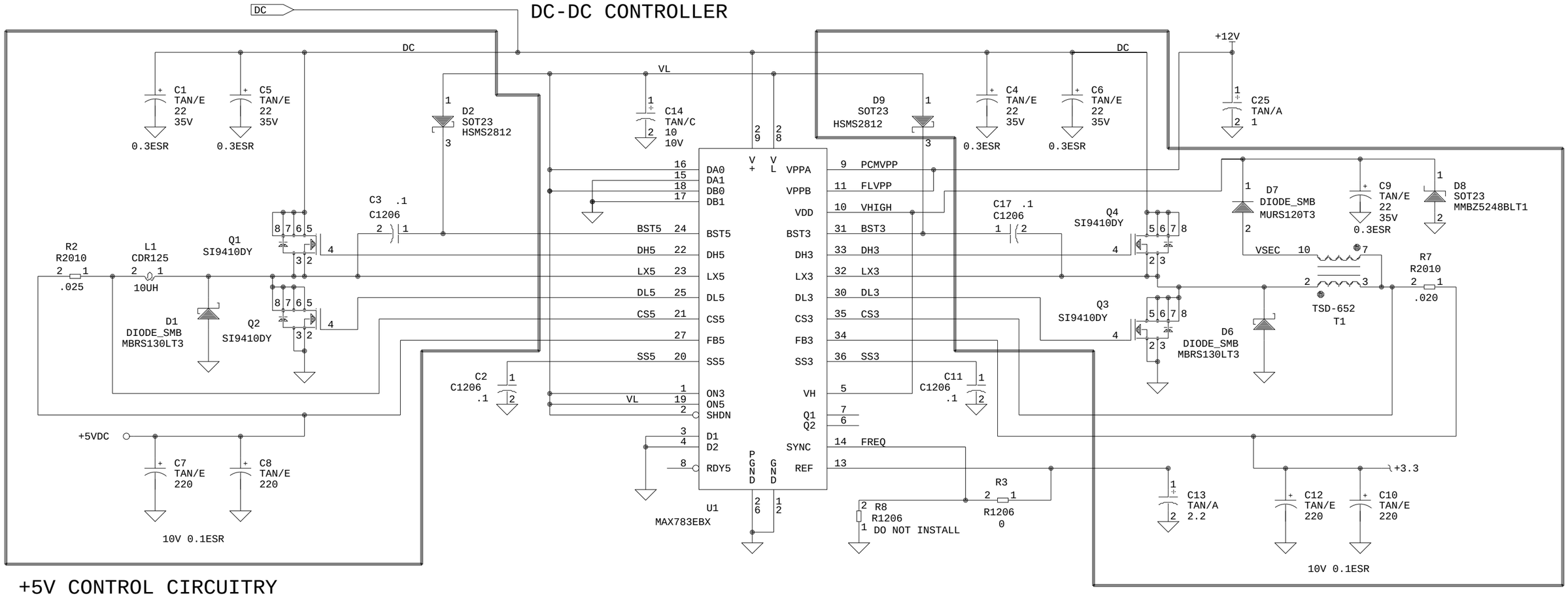

+5V CONTROL CIRCUITRY

+3.3V CONTROL CIRCUITRY

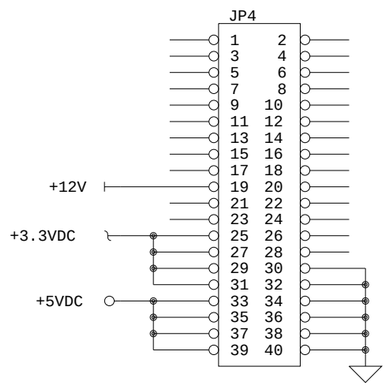

RadiSys Corporation		
Title: Hummingbird Portable Power Supply		
Size: B	Document Number: CNTRL.SCH	REV: 01
Date: November 1, 1995	Sheet 2 of 2	