POWER SUPPLY

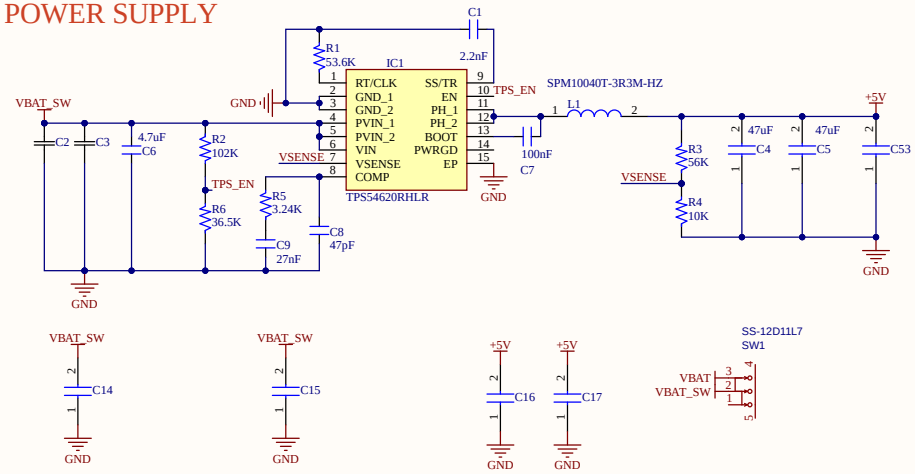

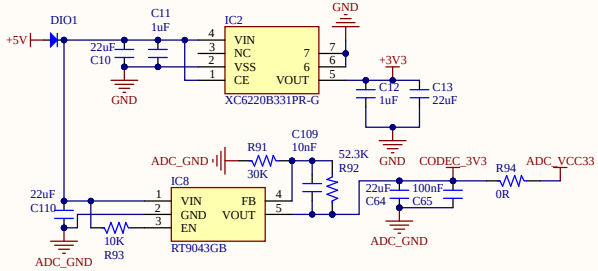

BATTERY CHARGER

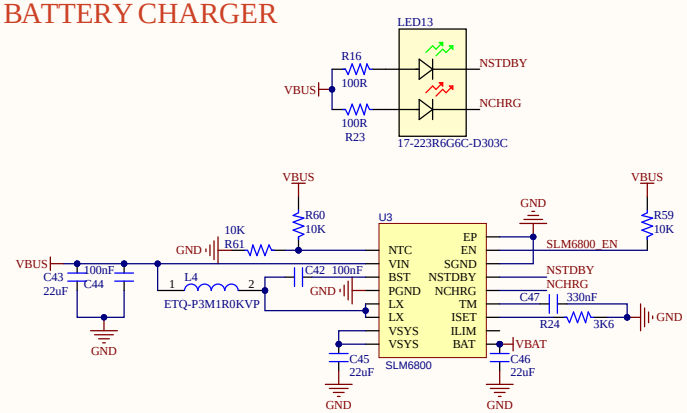

BATTERY PROTECT

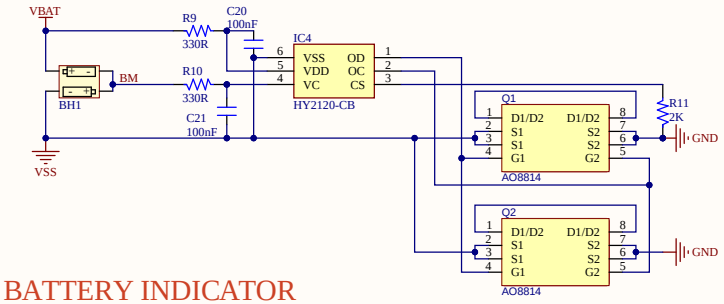

LOW BATTERY INDICATOR

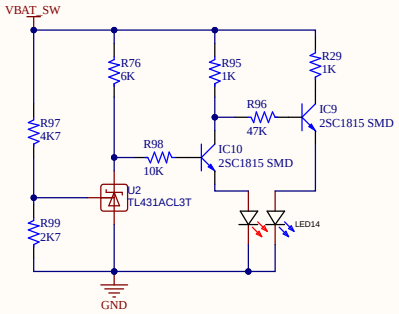

USB TYPE C

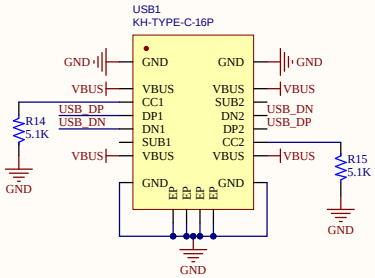

Title		
Size A3	Number	Revision
Date: 9/17/2024	Sheet of	
File: C:\Users\..\Crawler_Power_V3_N.SchDoc	Drawn By:	

PCA9685

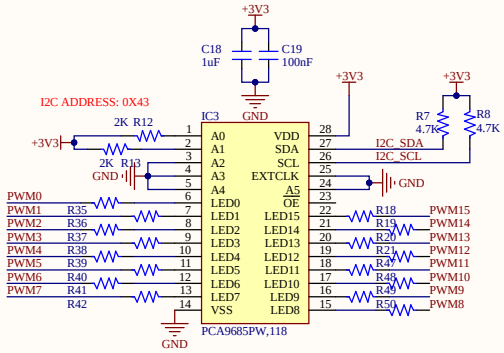

ACC & GYRO

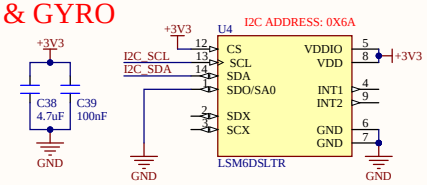

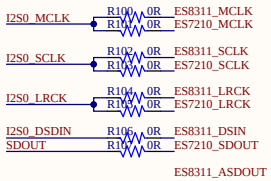

NEOPIXEL

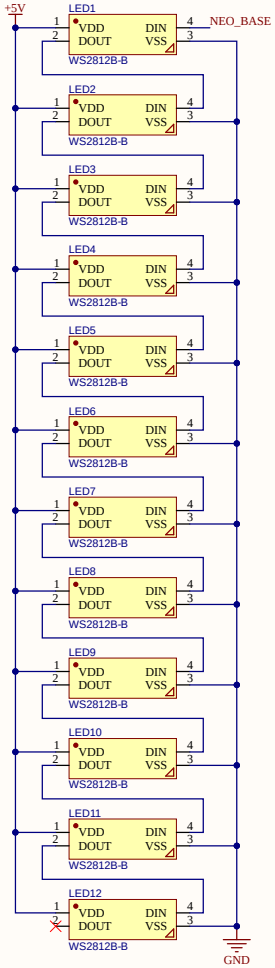

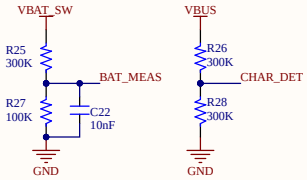

CONNECTOR SERVO

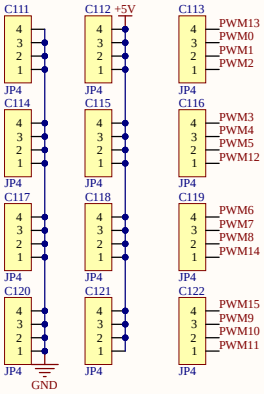

CONNECTOR Brain to Base

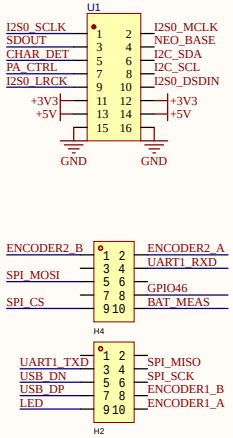

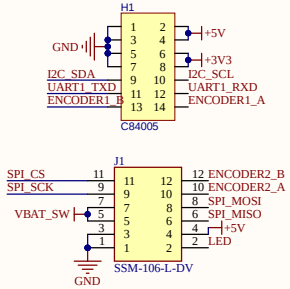

AMICx2

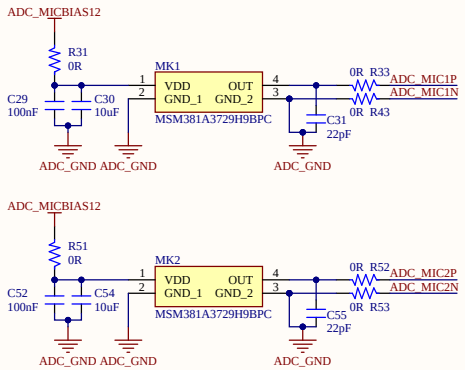

Acoustic Echo Cancellation

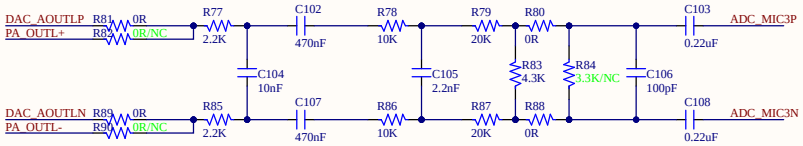

CODEC ES8311

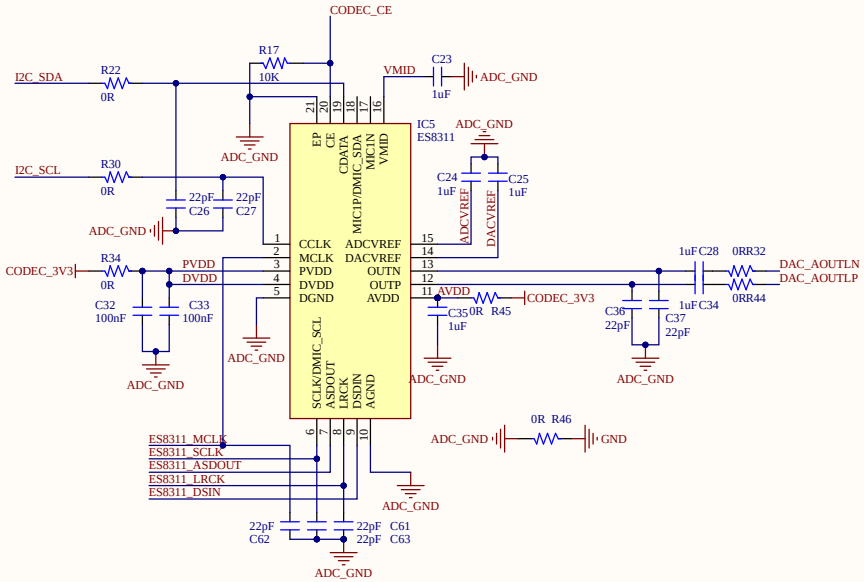

ADC

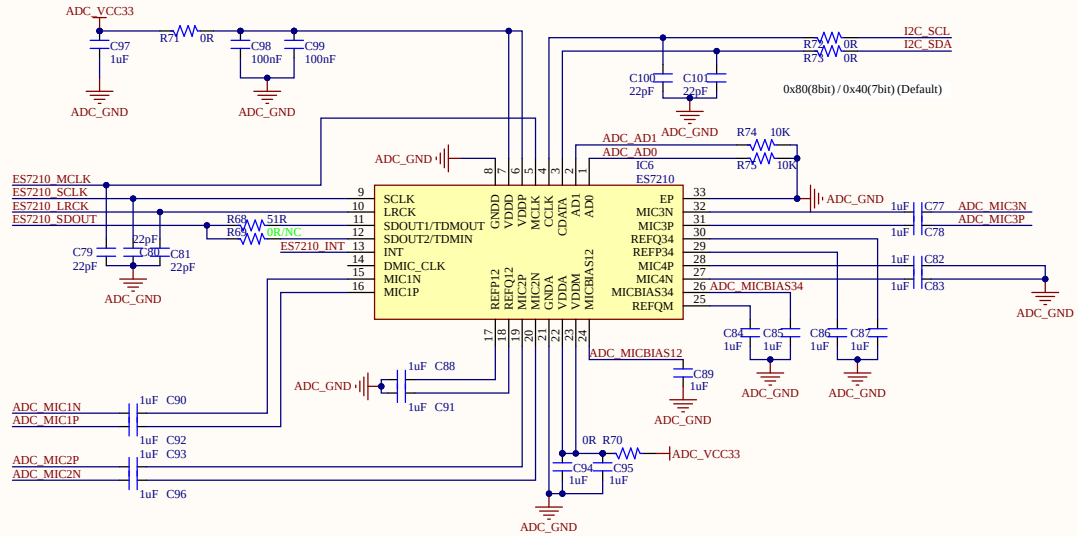

PA & SPEAKER

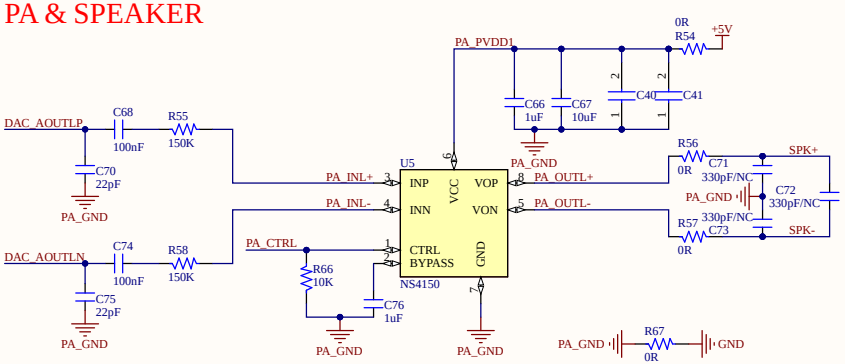

Title		
Size A3	Number	Revision
Date: 9/17/2024		Sheet of
File: C:\Users\..\Audio.SchDoc		Drawn By:

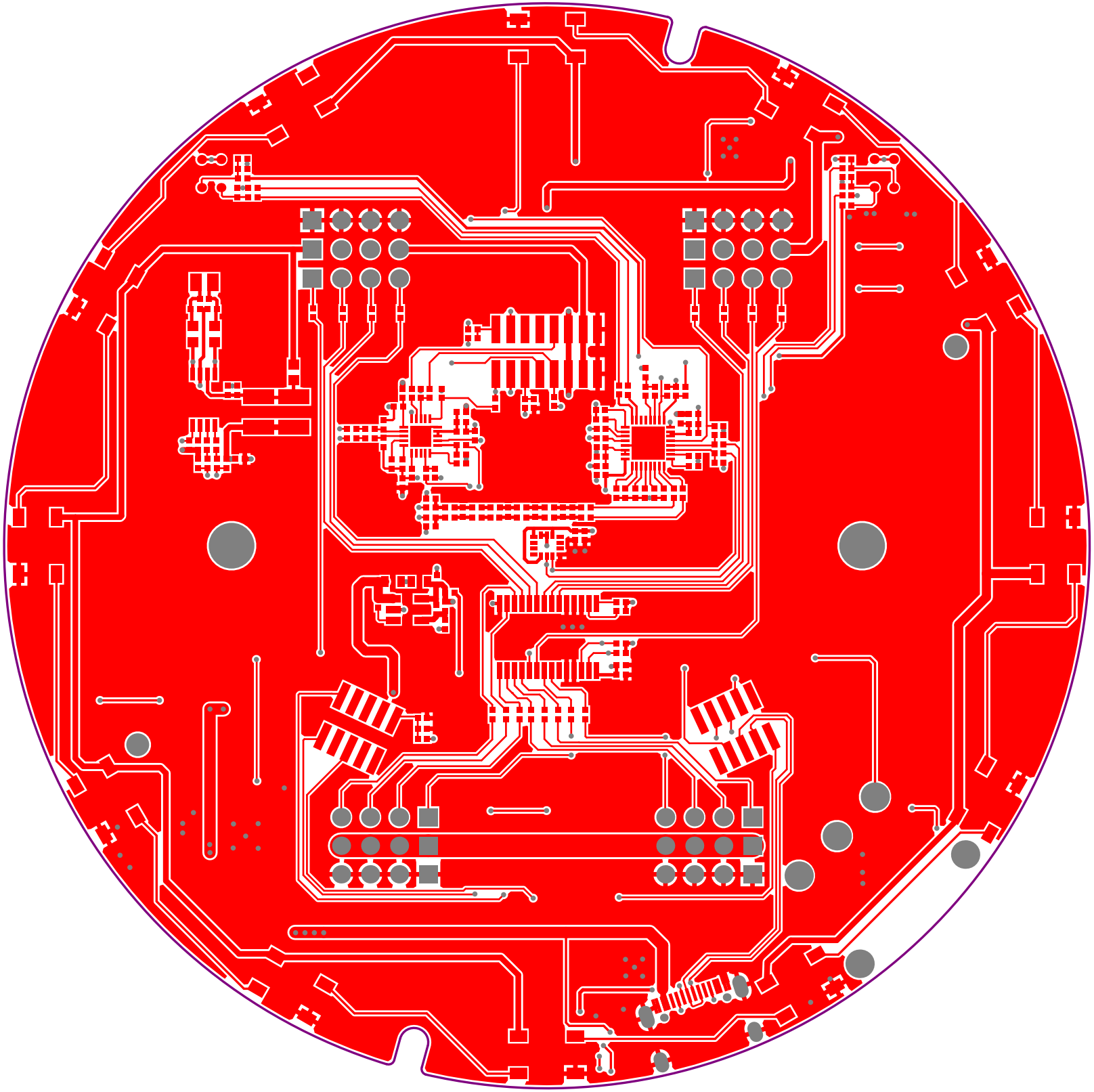

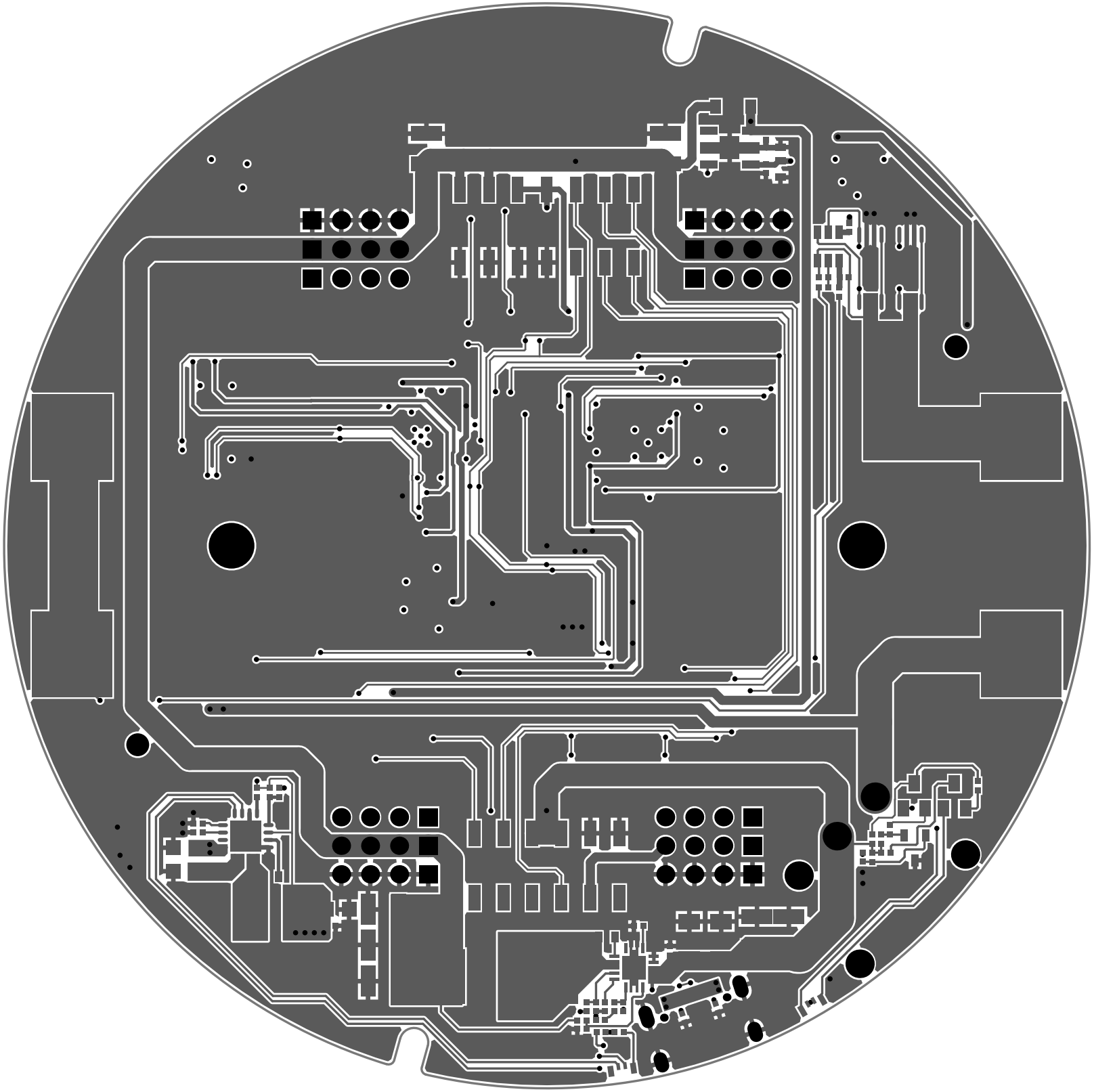

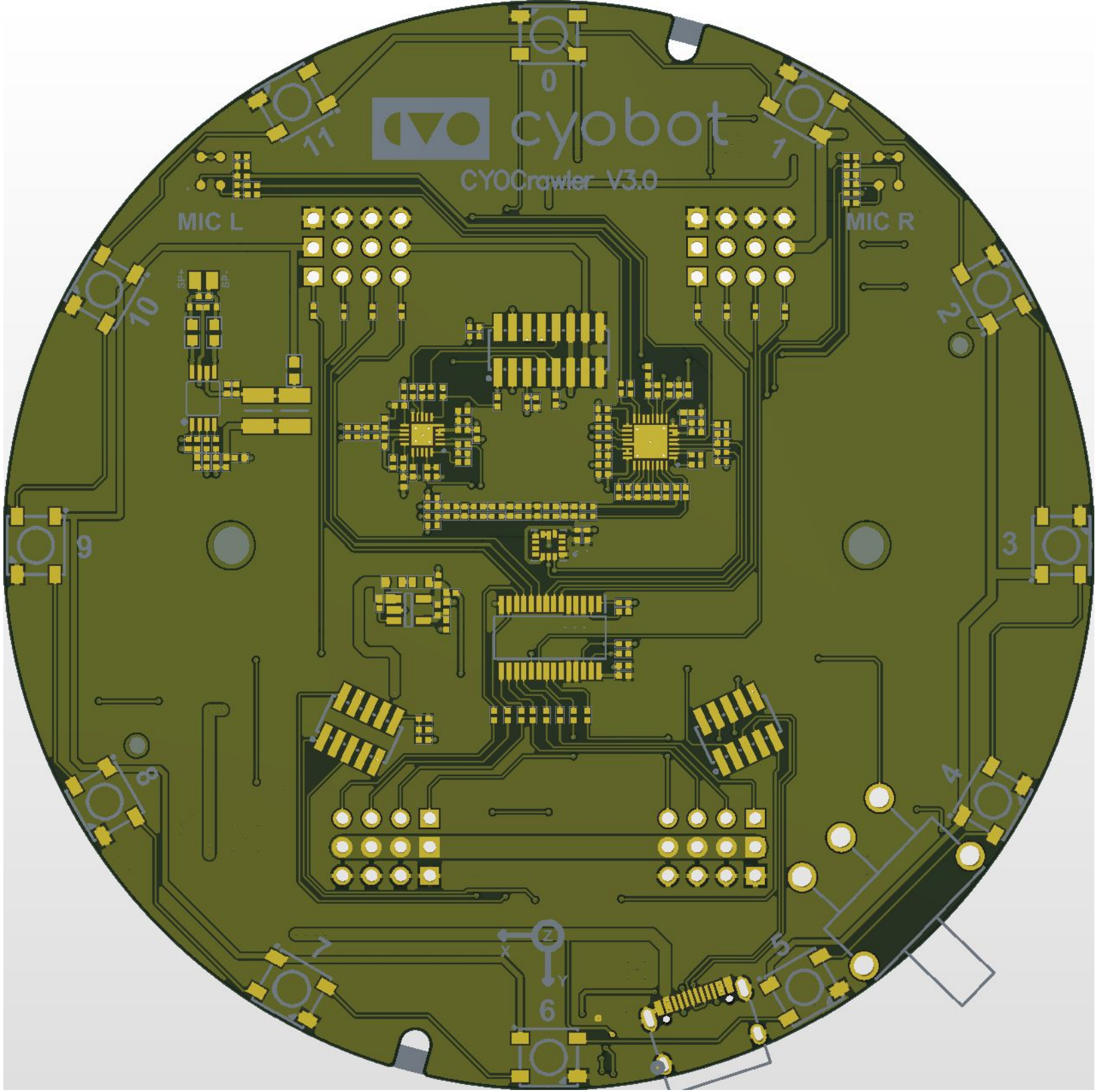
cyobot
CYOCrawler V3.0
MIC L
MIC R
0
1
2
3
4
5
6
7
8
9
10
11

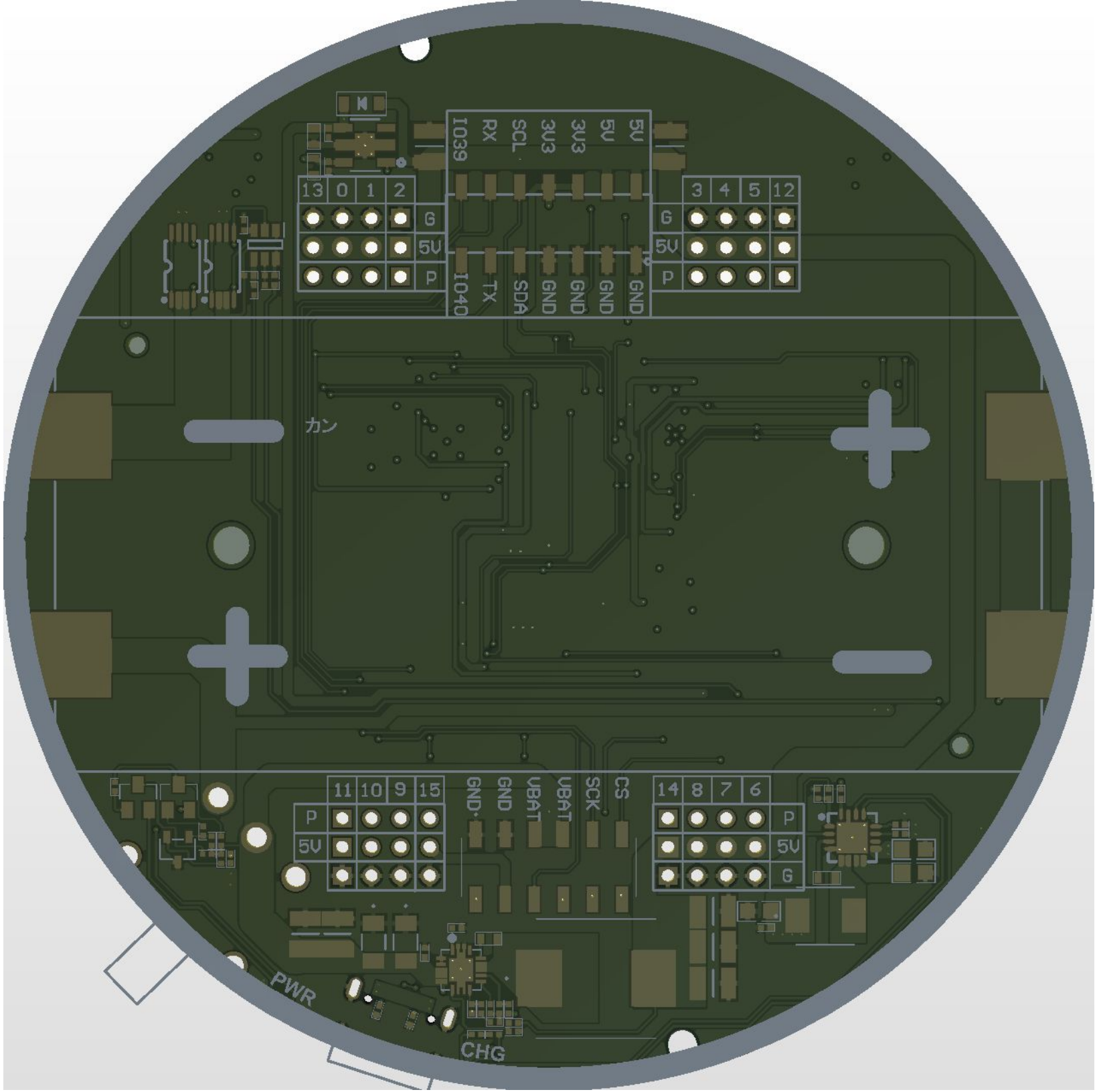
IO39
RX
SCL
3V3
3V3
5V
5V
13
0
1
2
G
5V
P
IO40
TX
SDA
GND
GND
GND
GND
3
4
5
12
G
5V
P
カン
11
10
9
15
P
5V
GND
GND
VBAT
VBAT
SCK
CS
14
8
7
6
P
5V
G
PWR
CHG

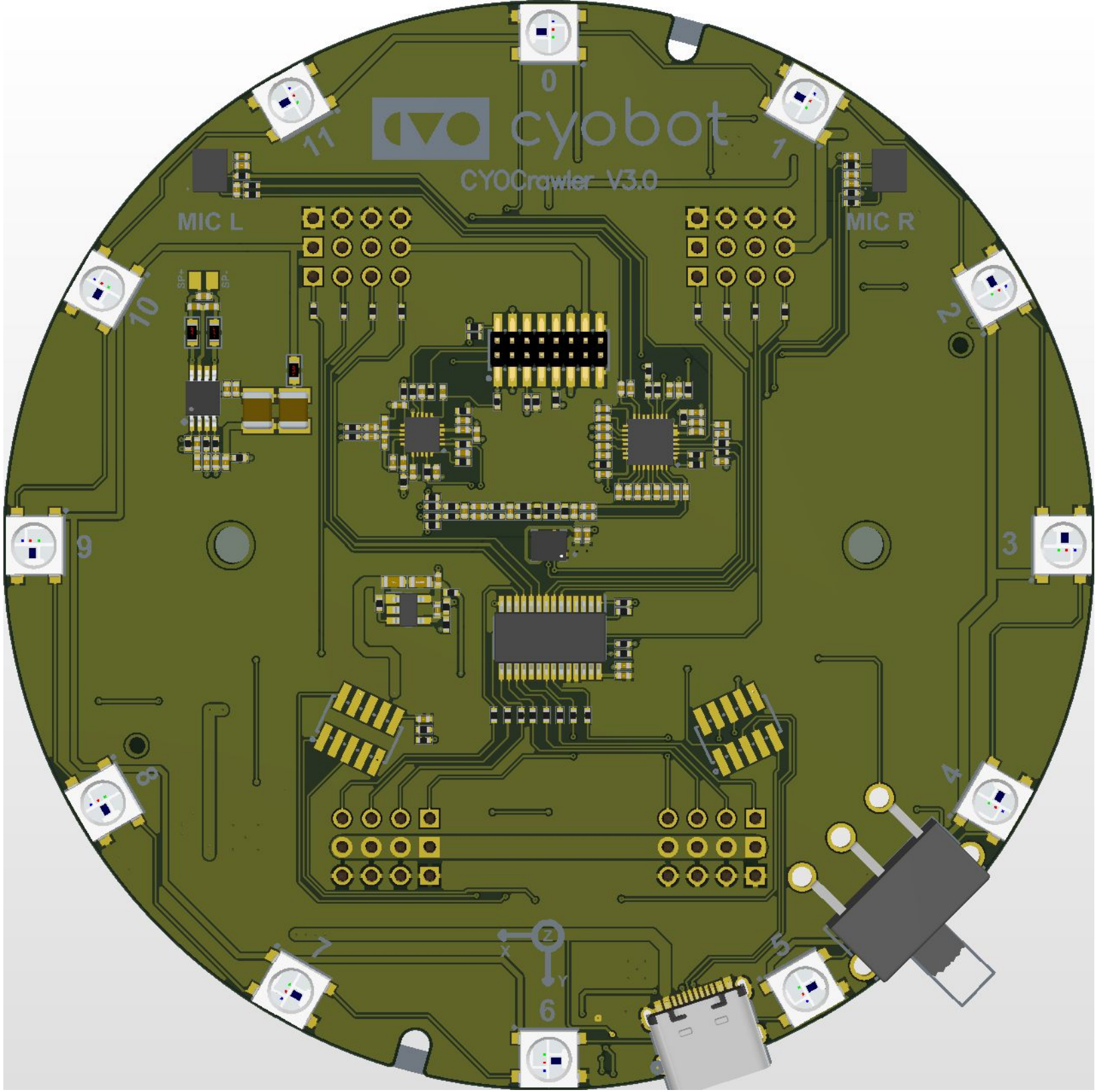
cyobot
CYOCrawler V3.0
MIC L
MIC R
0
1
2
3
4
5
6
7
8
9
10
11

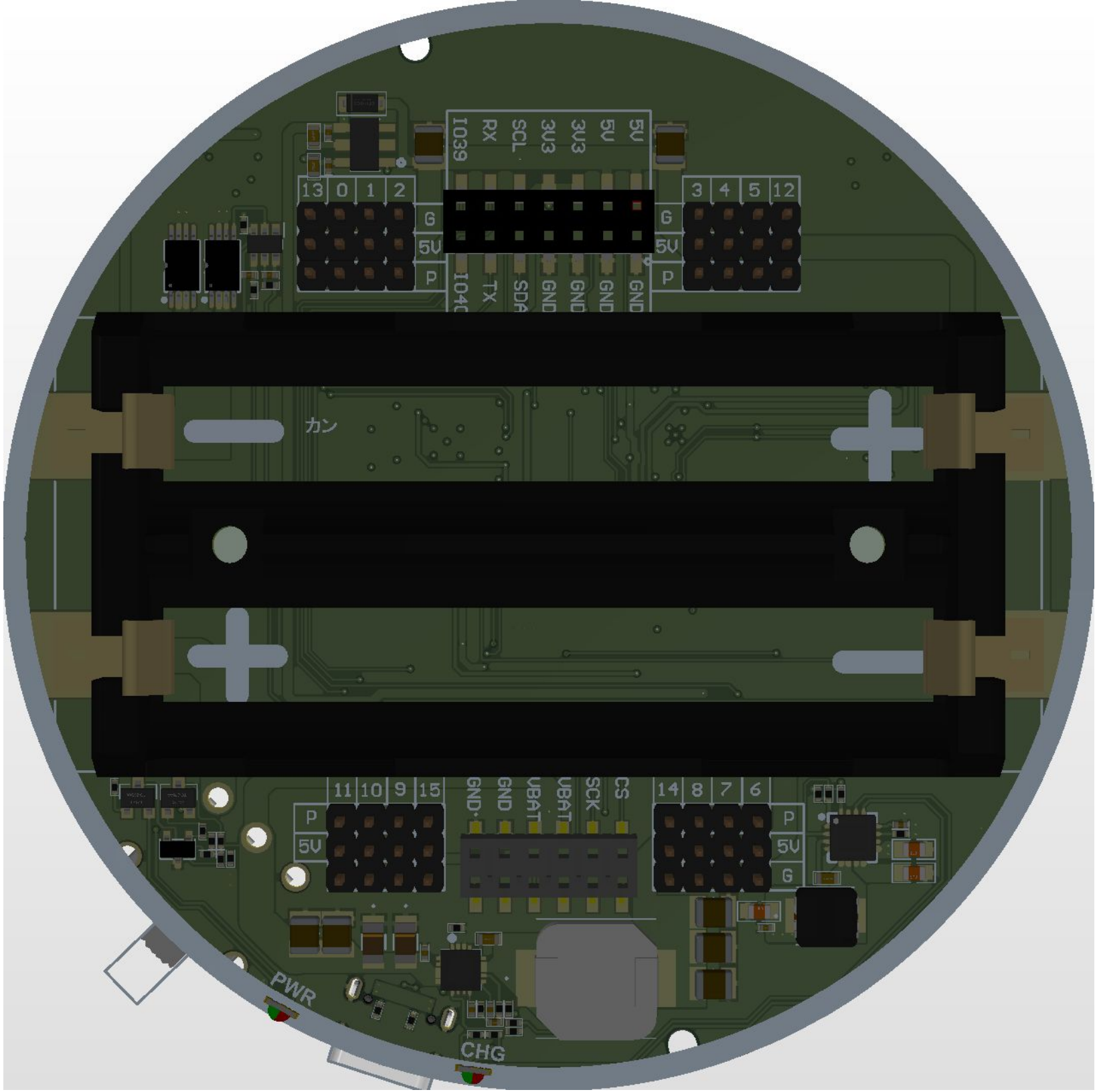
IO39
RX
SCL
3V3
3V3
5V
5V
13
0
1
2
G
5V
P
IO40
TX
SDA
GND
GND
GND
GND
3
4
5
12
G
5V
P
カン
11
10
9
15
P
5V
GND
GND
VBAT
VBAT
SCK
CS
14
8
7
6
P
5V
G
PWR
CHG