Printed on: 24/10/2024 2:56:16 PM

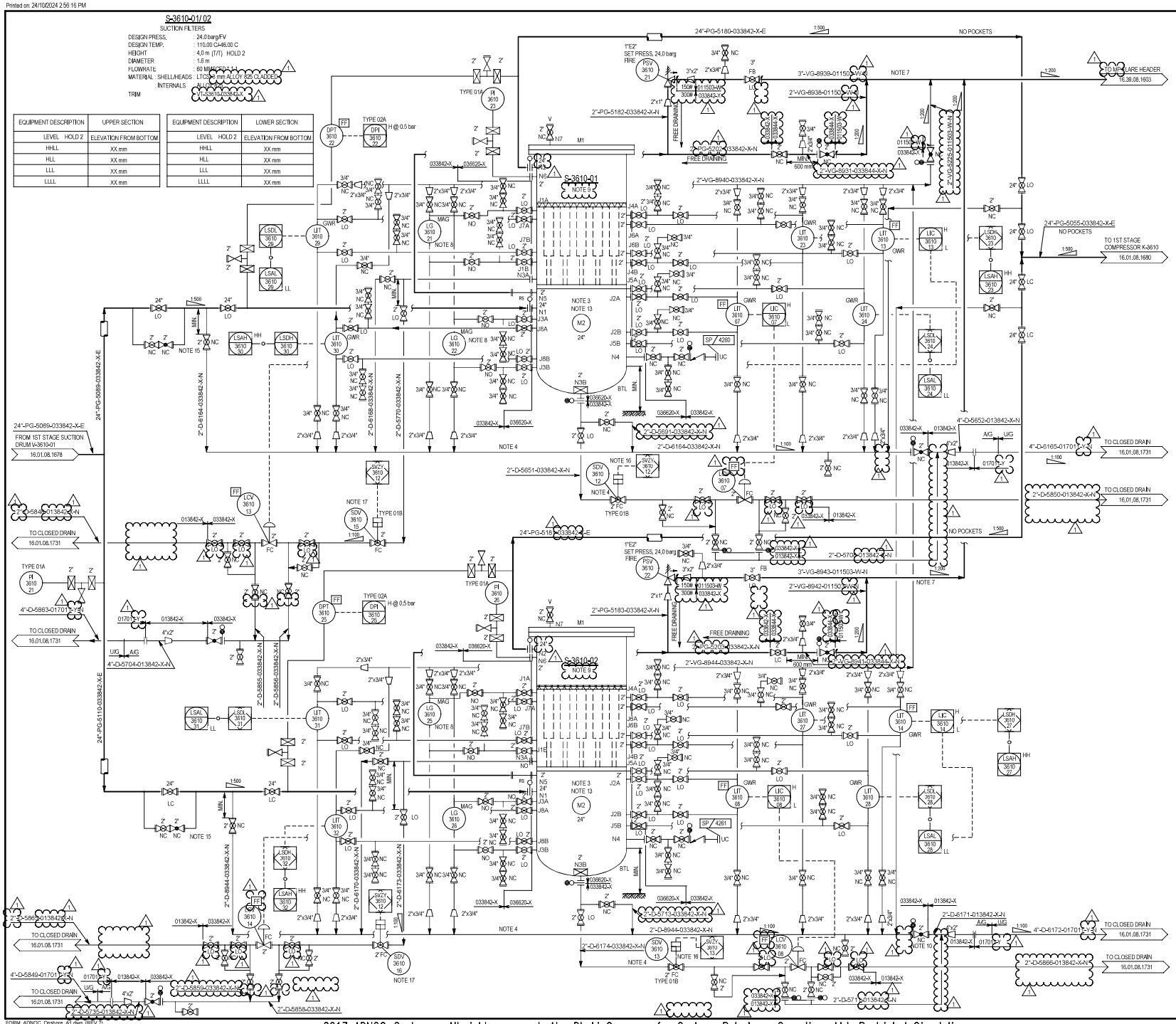

EQUIPMENT DESCRIPTION	UPPER SECTION
LEVEL HOLD 2	ELEVATION FROM BOTTOM
HHLL	XX mm
HLL	XX mm
LLL	XX mm
LLLL	XX mm

EQUIPMENT DESCRIPTION	LOWER SECTION
LEVEL HOLD 2	ELEVATION FROM BOTTOM
HHLL	XX mm
HLL	XX mm
LLL	XX mm
LLLL	XX mm

NOTES

1. ALL EQUIPMENT AND INSTRUMENT TAG NUMBERS ON THIS DRAWING ARE PREFIXED BY AREA CODE (16) AND PLANT AREA CODE (01) UNLESS OTHERWISE SPECIFIED.
2. FOR STANDARD SYMBOLS/LEGEND AND TYPICAL DETAILS SEE DRAWINGS 30-89-06-1601 SHT. 1 TO 16.
3. FILTERS ARE ARRANGED (2X100%) TO ALLOW CHANGEOVER, MANUALLY VENT AND DRAIN TO LOCAL SYSTEM CONNECTIONS ARE PROVIDED.
4. BRANCHES ARE ENTERING DRAIN HEADER AND/OR SUBHEADER FROM ABOVE CENTER LINE RODDING CONNECTION IS PROVIDED.
5. DELETED.
6. DELETED.
7. FLARE BRANCHES TO BE CONNECTED TO THE TOP ON THE MAIN HEADER AND/OR SUBHEADER AT 45°.
8. LEVEL GAUGES SHALL BE VISIBLE FROM THE DRAIN VALVE.
9. FILTER IS DESIGNED FOR PARTICULATE REMOVAL WITH EFFICIENCY OF 99.9% LARGER THAN 25 MICRONS.
10. SPECIALTY GLOBE VALVE (CV=20 USGPM (60F, 1PSI)) TO RESTRICT THE FLOW FROM S-3610-01/02 TO CLOSED DRAIN DRUM.
11. DELETED.
12. DELETED.
13. FILTER COALSCER TO BE DESIGNED FOR HOT GAS BYPASS DIRECTIONAL FLOW. PROPER STRENGTHING OF THE COALSCER TO BE PROVIDED.
14. VESSEL SHALL ALSO BE DESIGNED FOR 16.3 barg@ 110.00 C COINCIDENT CONDITION DUE TO 1st STAGE AFTER COOLER FAILURE WHILE ON RECYCLE.
15. LINE IS SUITABLY SUPPORTED DUE TO TWO-PHASE FLOW AND HIGH PRESSURE DROP. AIVIFIV ANALYSIS IS TO BE PERFORMED FOR THIS LINE.
16. SDV-3610-12 AND SDV-3610-13 ARE AUTO RESET TYPE.
17. SDV-3610-15 AND SDV-3610-16 ARE AUTO RESET TYPE.

HOLDS:

1. DELETED.
2. CONTROL VALVE SIZE, FILTER SIZE AND LEVELS, ALARM AND TRIP SET POINTS.

LEGEND

REVISION CLOUD

DRAWING REFERENCE

TITLE	DRG. NO.
P&ID LEGEND	P16093,30.99.08,1601 SHT. 1 TO 16
P&ID 1ST STAGE SUCTION KOD V-3610-01	P16093.16.01.08.1678
P&ID 1ST STAGE COMPRESSOR	P16093.16.01.08.1680
P&ID CLOSED DRAIN SYSTEM	P16093.16.01.08.1731
P&ID NEW MP FLARE HEADER	P16093.16.39.08.1605

THIS DRAWING IS NEWLY DEVELOPED FOR THIS PROJECT NO.P16093

REV.	DATE	DRN.	CHD.	APD.	DESCRIPTION
1	24/10/2024	KRA	ABS	SHA	ISSUED FOR CONSTRUCTION
F	29/07/2024	KRA	ABS	SHA	ISSUED FOR DESIGN
E	08/07/2024	KRA	ABS	SHA	RE-ISSUED FOR HAZOP
D	11/06/2024	KRA	ABS	SHA	ISSUED FOR HAZOP
C	12/03/2024	KRA	ABS	SHA	ISSUED FOR APPROVAL
B	18/02/2024	KRA	ABS	MAS	RE-ISSUED FOR REVIEW
A	26/01/2024	KRA	ABS	MEB	ISSUED FOR REVIEW

SCALE N.T.S | LOCATION: SAHIL | PROJECT No. P16093

أدنوك البرية
ADNOC Onshore

CONSULTANT / CONTRACTOR / ~~VENDOR~~
REJLERS TARGET

DRAWING No.

PROJECT: EPC OF SAHIL PHASE 3 DEVELOPMENT PROJECT

DRG. TITLE: PIPING AND INSTRUMENT DIAGRAM
SUCTION FILTERS : S-3610-01/02
EXPORT GAS COMPRESSOR CDS : SAHIL

DRG/ZNL	16	01	08	1679	1	1 / 1
	AREA	PAREA	DOC. CODE	SERIAL No.	REV.	SHT. OF SHT.

FORM_ADNOC_Onshore_A1.dwg_(REV.2)

2017 ADNOC Onshore . All rights reserved. Abu Dhabi Company for Onshore Petroleum Operations Ltd. Restricted Circulation

P16093-16-01-08-1679-1.PID