→ Symbolic python lib. (sympy)

Methods:

Symbol('x'), series($\sin^2$'x' + cos 'x')

jupyter → ~~sh~~ -h ≡ shift + tab

→ <u>Feedback</u>

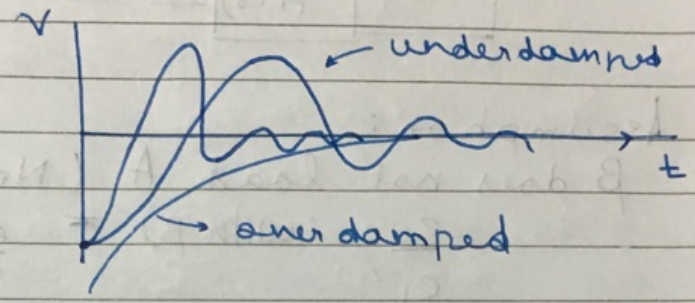

• No feedback ≡ open loop system

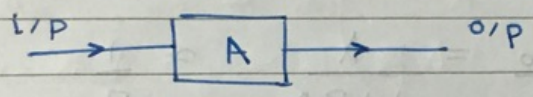

→ open loop sys.

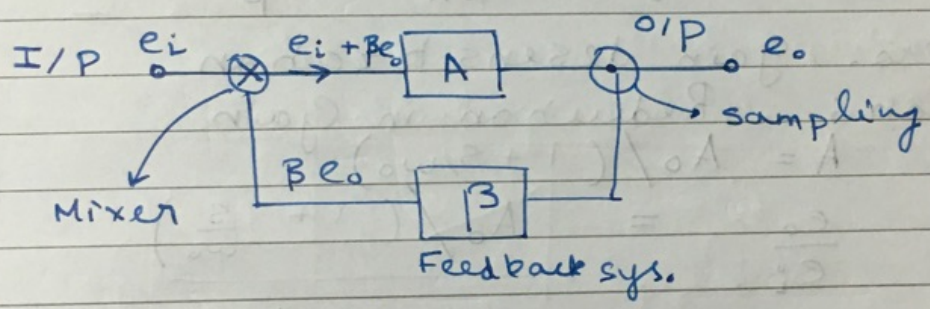

→ OL sys : → A

$$e_o = (e_i + \beta e_o) A$$

$$\Rightarrow e_o [1 - A\beta] = A e_i$$

$$\frac{e_o}{e_i} = \boxed{\frac{A}{1 - A\beta}}$$ → closed loop sys.

19.2.18

<u>Negative feedback</u>

<u>Recap</u>

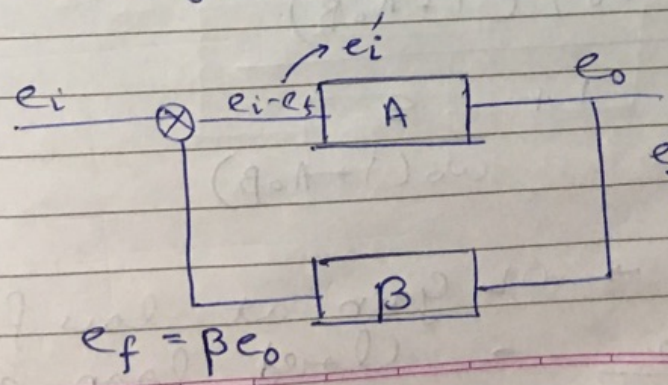

$$\frac{e_o}{e_i} = \frac{A}{1 + \beta A}$$

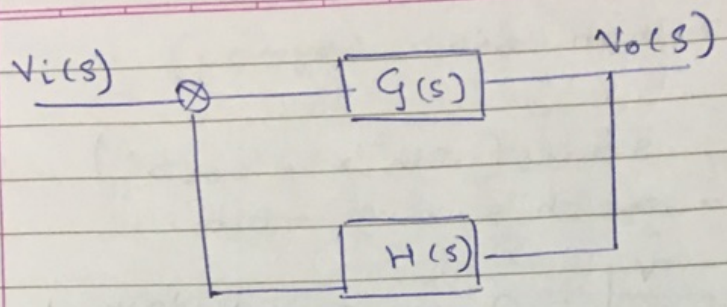

$$\frac{V_o(s)}{V_i(s)} = \frac{G}{1+GH}$$

→ Assumption:

1) β does not load A (No current drawn)

$$\frac{e_o}{e_i'} \text{ (with } \beta) = \frac{e_o}{e_i} \text{ (without } \beta)$$

$\beta A >> 1$

$$\frac{e_o}{e_i} = \frac{A}{1+\beta A} \approx \frac{1}{\beta}$$

pro: Gain desensitization

con: Reduction in Gain

$$A = A_0/(1+s/\omega_0)$$

$$\frac{e_o}{e_i} = \frac{A_0/\left(1+\frac{s}{\omega_0}\right)}{\left(1+\frac{A_0\beta}{1+s/\omega_0}\right)}$$

$$= \frac{A_0}{\left(1+\frac{s}{\omega_0}\right)+A_0\beta} =$$

$$= \frac{A_0/(1+A_0\beta)}{1+\frac{s}{\omega_0(1+A_0\beta)}}$$

Here,

A_0 → OL Gain at low freq

$\frac{A_0}{1+A_0\beta}$ → Closed loop gain at low freq.

→ $BW = \omega_0 (1 + A_0 \beta)$, ⇒ $\boxed{GBW = A_0 \omega_0}$

$$Gain = \frac{A_0}{1 + A_0 \beta}$$

ex → We have an Amplifier; $BW(\omega_0) = 200KHz$
& OL Gain $(A_0) = 100$

→ If we use feedback; we can get an Amp. with $GBW = A_0 \omega_0 = \underline{200KHz \times 100}$,
ex 500 KHz ↳ desired , and we can get a Gain of 20

→ pro: Larger BW Acheivable at the cost of Gain.
pro: Input resistance can be scaled
pro: o/p resistance can be scaled.

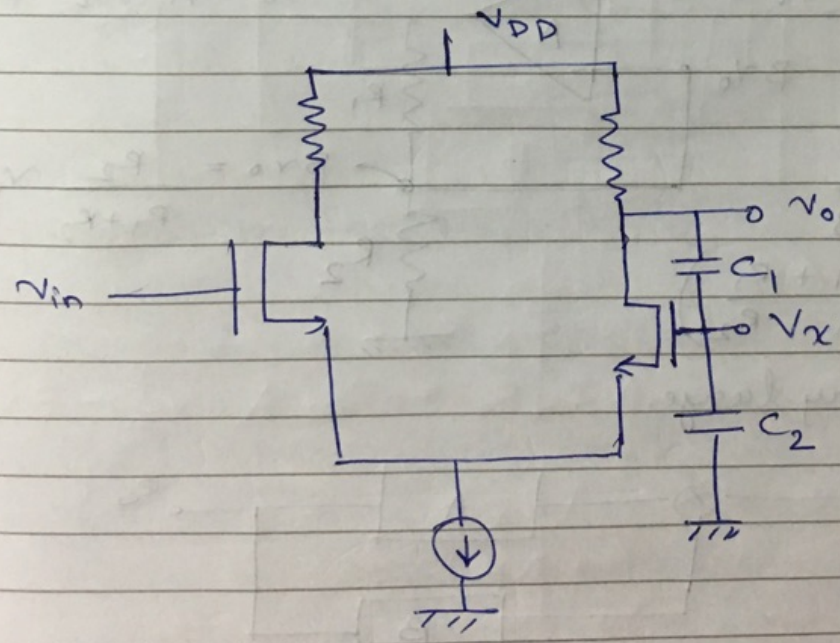

$$\beta = \left(\frac{C_1}{C_1 + C_2}\right)$$

1) Reduce to O.L system

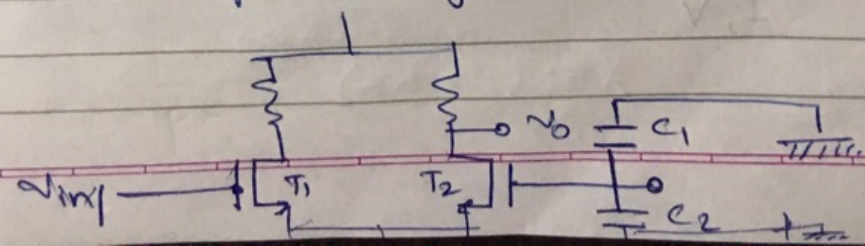

$$\beta = \left(\frac{c_1}{c_1 + c_2}\right)$$

$$|A| = \left(\frac{v_o}{v_{in}}\right) = \frac{g_m}{2}\left(r_{o_2} \parallel R_d\right) \simeq \frac{g_m R_D}{2}$$

$$v_{in_1} = \frac{v_{in}}{2} + \frac{v_{in}}{2}$$

$$v_{in_2} = \frac{v_{in}}{2} - \frac{v_{in}}{2}$$

$$|A_f| = \left(\frac{A}{1 + A\beta}\right) = \frac{g_m R_d / 2}{1 + \frac{g_m R_D}{2}\left(\frac{c_1}{c_1 + c_2}\right)}$$

- Voltage - Voltage feedback.

ex Non - Inverting Amplifier.

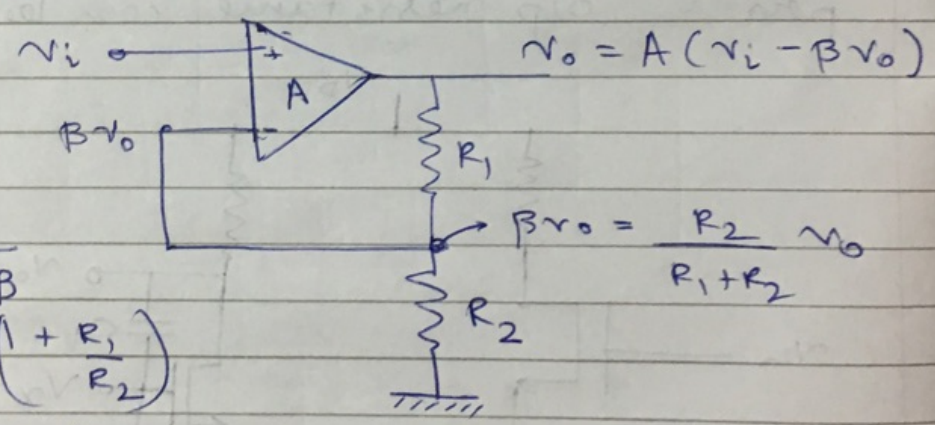

$$\frac{v_o}{v_i} = \frac{A}{1 + A\beta}$$

$$\simeq \frac{1}{\beta} = \left(1 + \frac{R_1}{R_2}\right)$$

A is very large.

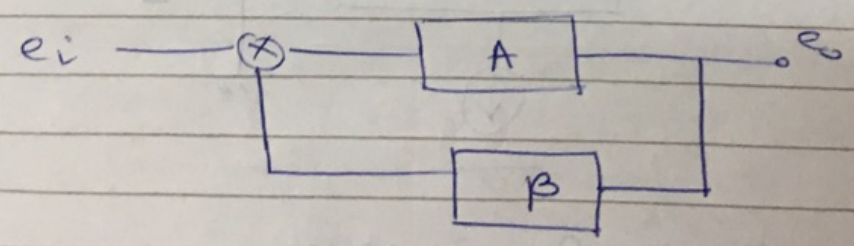

I, V

Feedback in Systems

$i_o = f(i_{in})$

	A	B	C	D
Amp	$v_o = f(v_i)$ Voltage Amp.	$v_o = f(i_{in})$ Transresis. amp.	$i_o = f(v_{in})$ Transcond. amp.	~~$i_o = f(i_{in})$~~ current amp.
Feedback Network	Number, Raised impedance.	Conductance	resistance	Number Raised impedance.
	• Feedback must be in series → Voltage series feedback.	• FB must be in // → Voltage Shunt FB	• FB must be in series. → Current series FB	• FB must be in // → i // feedback "current" shunt FB

20.2.18

Recap - ve F.B

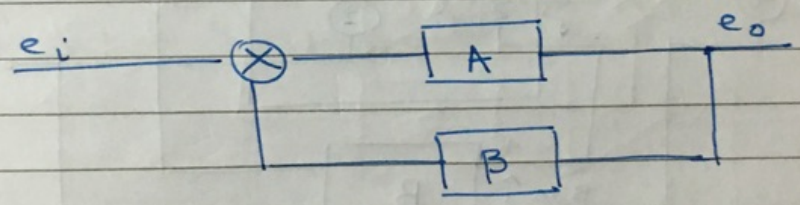

→ Gain with feedback $= A_f = \dfrac{A}{1+A\beta}$

OL Gain = A, Loop Gain = Aβ, feedback factor = β

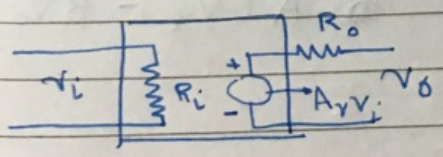

, Below Voltage-Series feedback

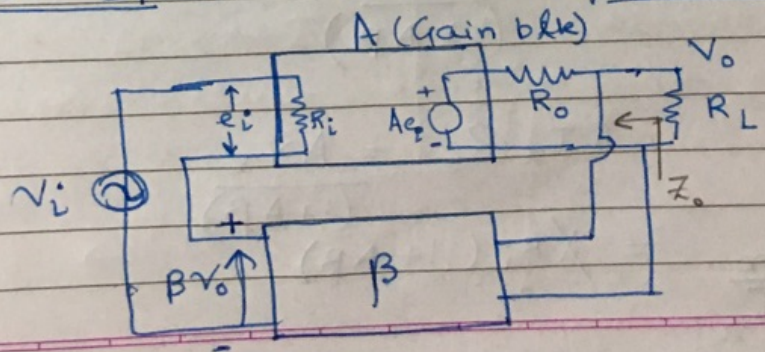

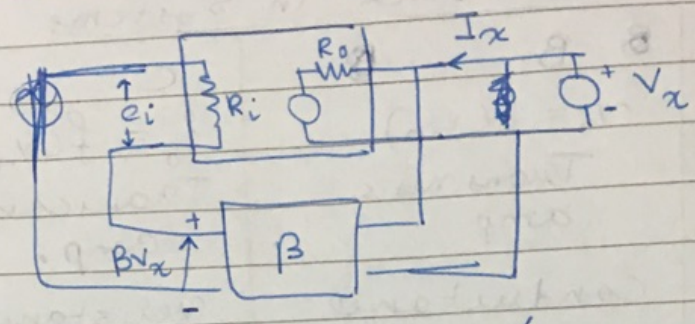

$$e_i = -\beta V_x \quad \text{(set src 0)}$$

$$-A\beta V_x = -R_o I_x + V_x$$

$$I_x = \frac{V_x(1+A\beta)}{R_o}$$

$$\Rightarrow \cancel{Z_o = (R_o)} \quad Z_o = R_o = \frac{V_x}{I_x} = \frac{R_o}{(1+A\beta)}$$

→ Input Impedance

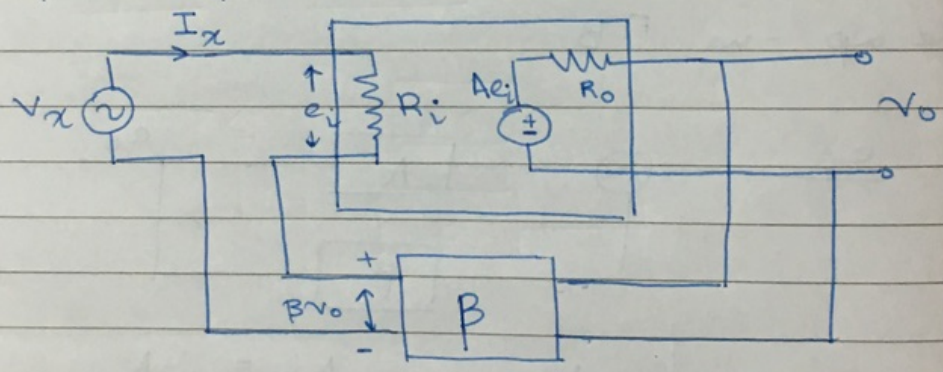

→ Input imp.

$$e_i = I_x R_i$$

$$\Rightarrow Ae_i = A I_x R_i = A(V_x - \beta v_o)$$

$$v_o = \frac{A V_x}{(1+A\beta)}$$

$$A I_x R_i = \frac{A V_x}{(1+A\beta)}$$

$$\frac{V_x}{I_x} = R_i(1+A\beta)$$

$$\Rightarrow \boxed{R_i' = R_i(1 + A\beta)}$$

→ Summary : $A_f = \dfrac{A}{1 + A\beta} \simeq \dfrac{1}{\beta}$ → cost

Note

- If we sample o/p voltage, then $R_o \uparrow$

$$R_i' = R_i(1 + A\beta) \uparrow$$

$$R_o' = \frac{R_o}{1 + A\beta} \downarrow$$

$$\omega_o' = \omega_o(1 + A\beta)$$

Advantages

→ Qualitative : $R_i = \dfrac{\Delta V}{\Delta I}$ → large, → small for -ve F.B

→ By similar reasoning.

{• Sampling o/p voltage, $R_o \downarrow$}

→ GBW ≡ $\underbrace{\text{low frequency Gain}}$, × ω_c

↳ since we treat it like cascaded LPF

→ $A_o \omega_o$

→ Current - Voltage Feedback

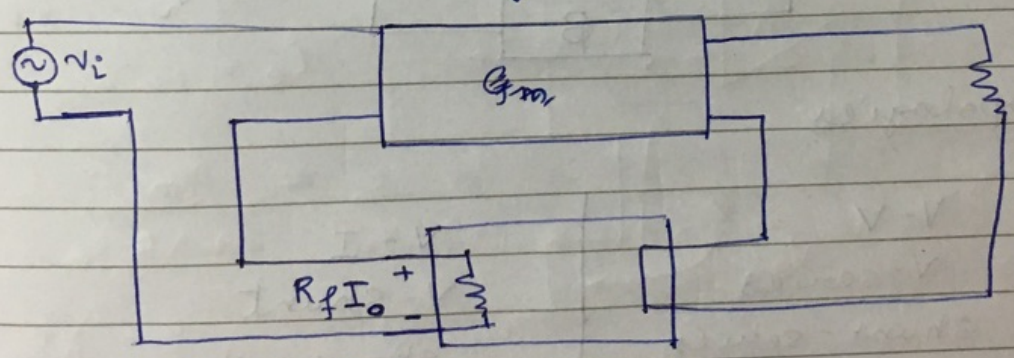

→ G_m block

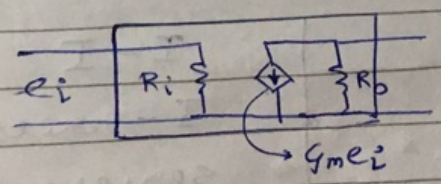

ex

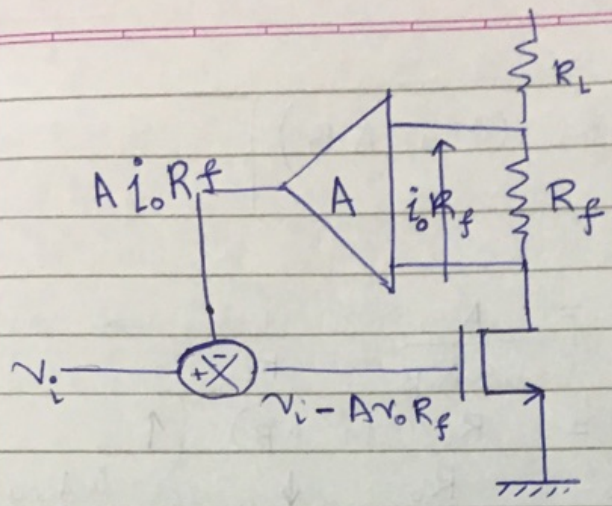

$$g_m (v_i - A i_o R_f) = i_o$$

$$\Rightarrow \frac{i_o}{v_i} = \frac{g_m}{1 + A g_m R_f} = \frac{g_m}{1 + g_m \beta}$$

22.2.12

Negative Feedback

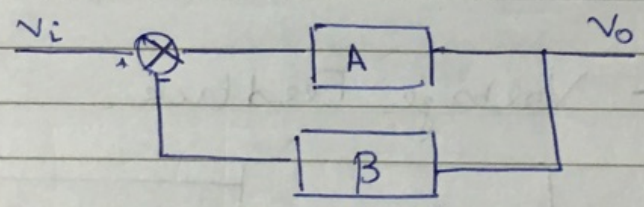

$$\frac{v_o}{v_i} = \frac{A}{1 + A\beta}$$

→ Topologies

V-V V-series shunt-series	V-I V-shunt shunt-shunt
I-V I-series series-shunt	I-I I-series series-series

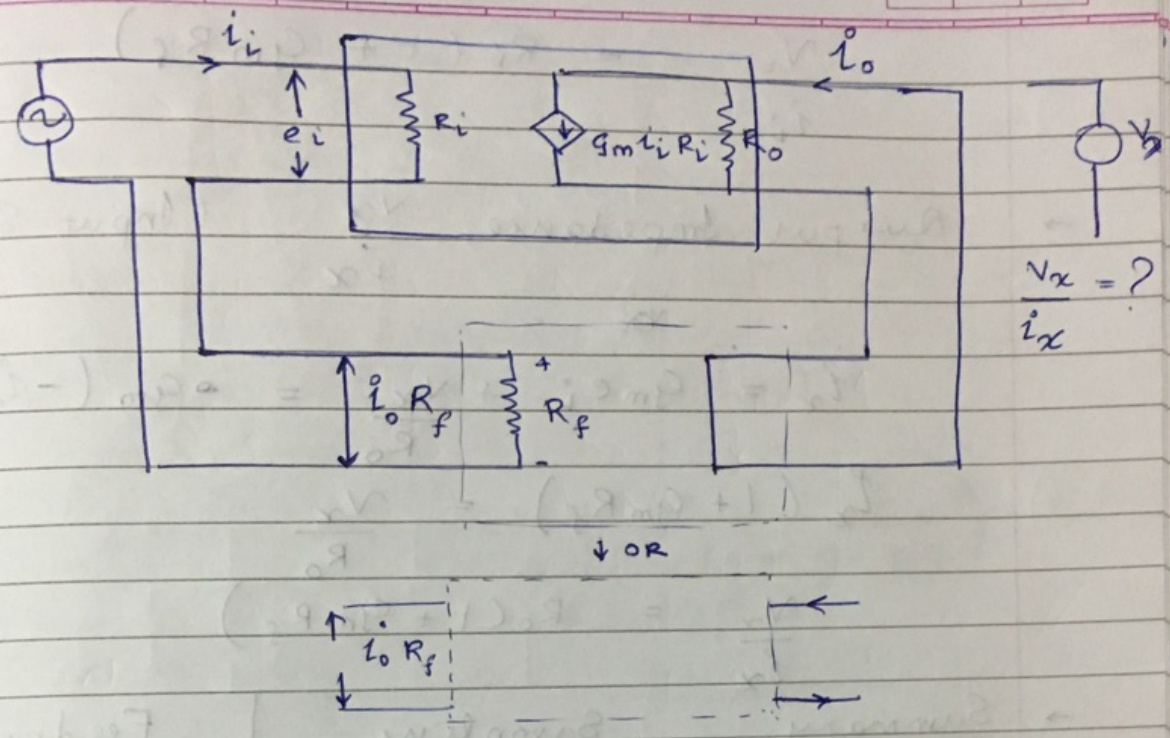

→

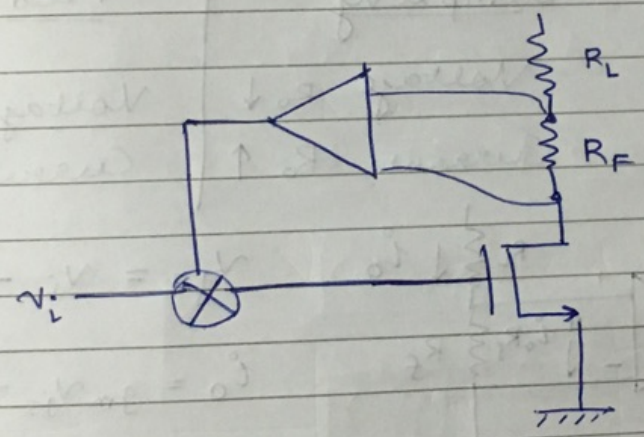

$$i_i = \frac{(v_i - i_o R_f)}{R_i}$$

$$i_o = g_m i_i R_i$$

$$i_o = g_m (v_i - i_o R_f)$$

$$i_o (1 + g_m R_f) = g_m v_i$$

$$\frac{i_o R_f}{v_i} = \beta = \left(\frac{g_m R_f}{1 + g_m R_f}\right) \Rightarrow \left(\underset{\text{effective}}{g_{m_f}} = \frac{g_m}{1 + g_m R_f}\right)$$

→ Input Impedance.

$$e_i = i_i R_i \neq (v_i - i_o R_f)$$

$$i_o = g_m i_i R_i$$

$$\Rightarrow i_o = \left[\frac{g_m}{1 + g_m R_f}\right] v_i$$

$$\Rightarrow g_m i_i R_i = \frac{g_m v_i}{1 + g_m R_f}$$

$$\frac{v_i}{i_i} = R_i(1 + G_m R_f)$$

→ Output Impedance, $\frac{v_x}{i_x}$ (Input Shorted)

or

$$i_x = G_m e_i + \frac{v_x}{R_o} = -G_m(-i_x R_f) + \frac{v_x}{R_o}$$

$$i_x(1 + G_m R_f) = \frac{v_x}{R_o}$$

$$\frac{v_x}{i_x} = R_o(1 + G_m R_f)$$

→ Summary

Sampling		Feedback	
Voltage	$R_o \downarrow$	Voltage	$R_i \uparrow$
Current	$R_o \uparrow$	Current	$R_i \downarrow$

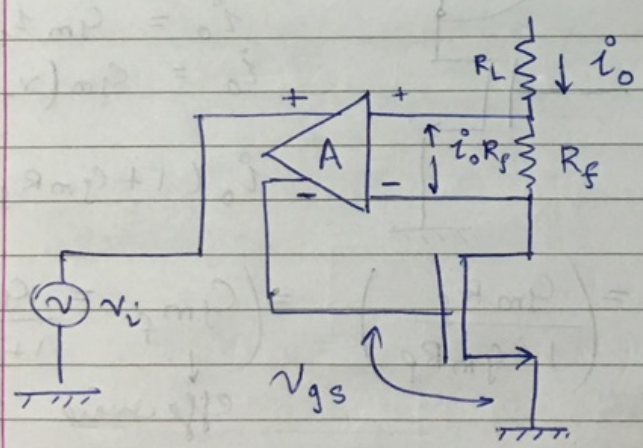

$$v_{gs} = v_i - A i_o R_f$$

$$i_o = g_m v_{gs} = g_m(v_i - A i_o R_f)$$

$$\frac{i_o}{v_i} = \frac{g_m}{1 + A R_f g_m} = \frac{g_m}{1 + \beta g_m}$$

$$\beta = A R_f$$

→ ~~Negative~~

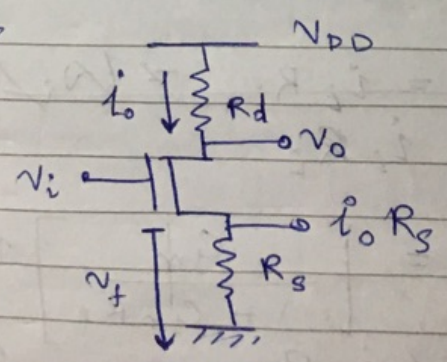

$$v_f = i_o R_s = \beta i_o$$

(Since $v_{gs} = v_i - v_f$)

$$\Rightarrow \beta = R_s$$

→ Consider o/p to be current

$$v_o = \frac{-\mu v_i R_d}{R_d + r_o + (1+\mu) R_s}$$

When $R_s = 0$,

$$i_o = g_m v_i$$

$$A = g_m \quad (i_o / v_i)$$

$$\boxed{g_{mf} = \frac{g_m}{1 + g_m R_s}} \qquad \left(\frac{A}{1 + A\beta}\right)$$

Proper der.

$$i_o = \frac{-v_o}{R_d} = \frac{g_m r_o v_i}{R_d + r_o + \cancel{(1+\mu) R_s}\ (1 + g_m r_o) R_s}$$

$$\simeq \frac{g_m r_o v_i}{r_o + R_s + g_m r_o R_s}, \quad R_d << r_o$$

$$\simeq \frac{g_m r_o v_i}{r_o (1 + g_m R_s)} \quad R_s << r_o$$

$$\left(g_{mf} = \frac{g_m}{1 + g_m R_s}\right)$$ → Same Result

→ Amplifiers.

	Voltage Amp.	Current Amp.	Transconduc.	Trans-resis.
	$v_o = f(v_i)$	$i_o = f(i_i)$	$i_o = f(v_{in})$	$v_o = f(i_{in})$
Decide type of feedback accordingly	$R_i \uparrow$, $R_o \downarrow$	$R_i \downarrow$, $R_o \uparrow$	$R_i \uparrow$, $R_o \uparrow$	$R_i \downarrow$, $R_o \downarrow$

5.2.18

A-1)

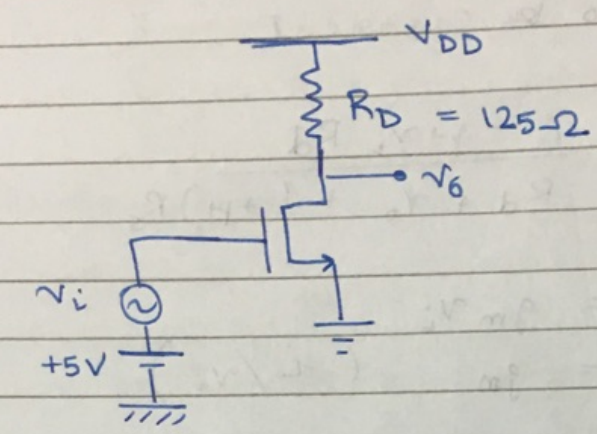

(a) Source

(b) 40mS → -5×10^{-3}

(c) 125Ω

A-2)

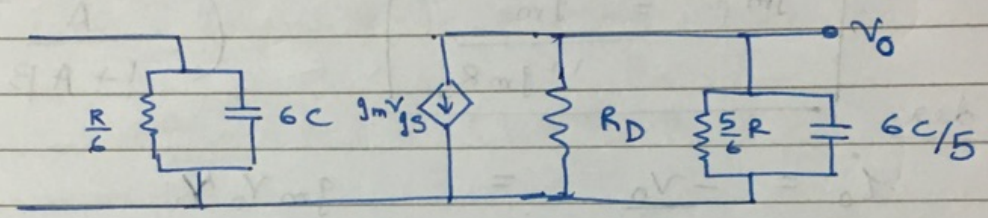

→ Solutions posted on moodle.

7.3.18

Positive Feedback

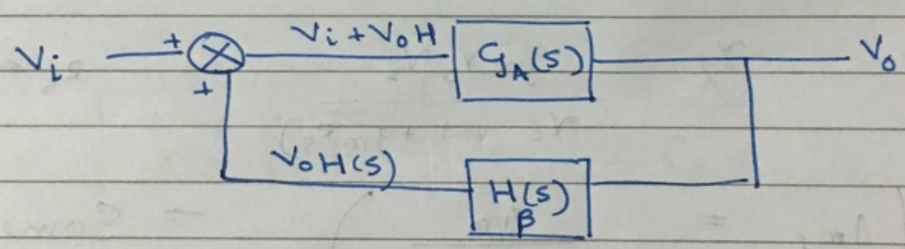

$$V_o = (V_i + V_oH)\,G$$

$$\frac{V_o}{V_i} = \frac{G}{1-GH} \equiv \frac{A}{1-A\beta} \quad (\text{may} \to \infty)$$

$$\left.\begin{array}{l} V_i \to 0 \\ V_o \to \text{finite} \end{array}\right\} \text{when} \to \infty$$

→ G → Amplifier

H → Freq. ~~sle~~ selective feedback

$GH = 1$

$A\beta = 1$

target is oscillator
here look at v_o finite for $v_i \to 0$

→ In oscillators : $v_i = 0 \rightarrow v_o = f(t)$

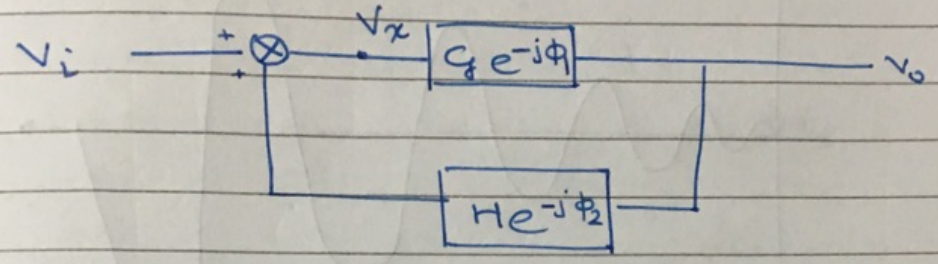

$$\frac{V_o}{V_i} = \frac{Ge^{-j\phi_1}}{1 - GHe^{-j(\phi_1+\phi_2)}}$$

→ Contraints ($v_i \to 0$ v_o finite)

$$GHe^{-j(\phi_1+\phi_2)} = 1$$

$$|GH| = 1$$

$$\phi_1 + \phi_2 = 2n\pi$$

Barkhausen Criteria for oscillation

→ Signals are noisy with uniform power spectral density (PSD)

→ Here we would like $|GH| = 1$ and $\phi_1 + \phi_2 = 2n\pi$ at $\boxed{\text{some } \omega = \omega_0 \text{ only.}}$

Here only for ω_0 $(GH = 1)$,

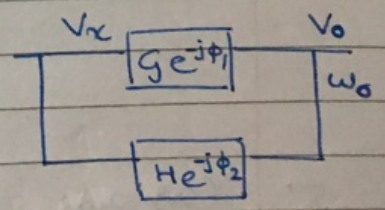

$$V_x = G(1 + GH + G^2H^2 + \cdots)$$

Initially noise

Assume unit noise

$$= \left(\frac{G}{1-GH}\right)$$

But only for ω_0 component of white noise, others are unamplified.

$$V_o = f(\omega_0)$$

→ $v_o(t)$

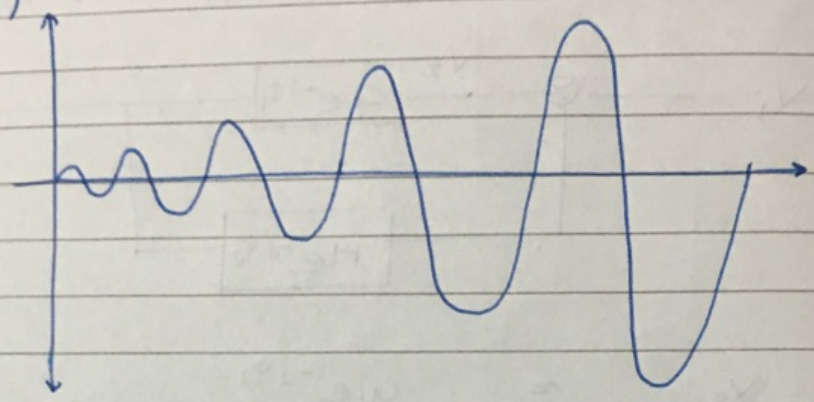

→ <u>Time Delay</u> (ΔT_0 almost saturate)

$$\sin(\omega t - \phi_1) = \sin\omega\left(t - \frac{\phi_1}{\omega_0}\right)$$

$\sin\omega(t - t_1)$

Hence $T_{sat.} = (3 \text{ or } 4) \times \left(\frac{\phi_1}{\omega_0} + \frac{\phi_2}{\omega_0}\right)$

↳ first few terms significant

ex $\lambda = 0$

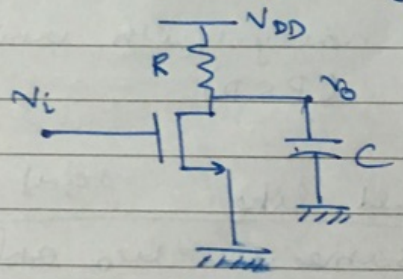

$$\frac{v_o}{v_i} = -g_m\left(R \,//\, \frac{1}{sC}\right)$$

$$= \frac{-g_m R}{1 + sRC}$$

↳ $\frac{-A}{1+sRC}$

$$\angle\frac{v_o}{v_i} = \pi + \arg\left(\frac{1}{1 + j\omega RC}\right)$$

$$= \pi - \tan^{-1}(\omega RC)$$

↳ we can't get 2π ever!

→ <u>Cascade</u>

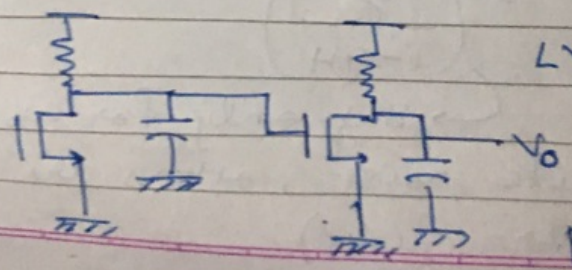

$\angle\frac{v_o}{v_i} = \cancel{2\pi - \tan^{-1}}$

$2\pi - 2\tan^{-1}(\omega RC)$

we ~~to~~ can't practically have $\omega RC = 0$

→ 3 Stage

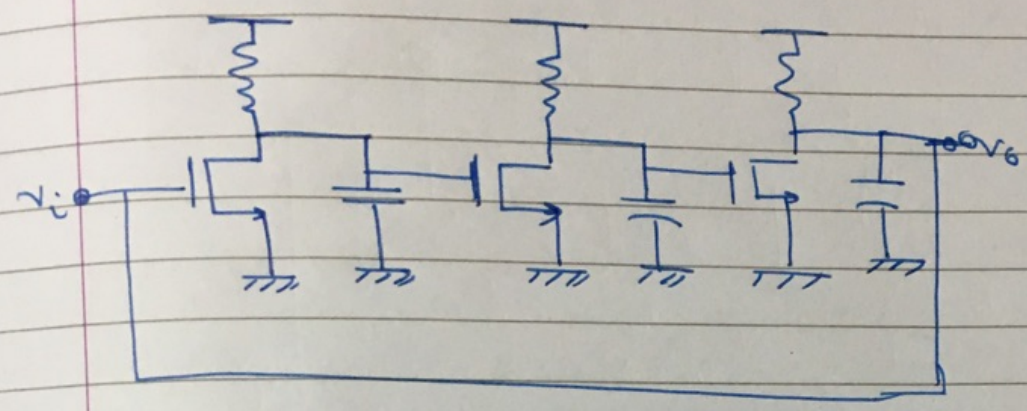

$$A\beta = GH = \frac{v_o}{v_i} = \frac{-A^3}{(1+sRC)^3} \qquad \angle\frac{v_o}{v_i} = \pi - 3\tan^{-1}\omega RC$$

→ If we take, $\tan^{-1}\omega RC = \frac{\pi}{3}$ → Ring Oscillator

$$\tan^{-1}\omega_0 RC = \frac{\pi}{3} \Rightarrow \omega_0 RC = \sqrt{3}$$

$$\Rightarrow \text{pick: } RC = \frac{\sqrt{3}}{\omega_0}$$

$$GH = -\frac{A^3}{\left(1 + \frac{j\omega}{\omega_0}\sqrt{3}\right)^3}$$

At $\omega = \omega_0$, $\left|\frac{v_o}{v_i}\right| = \frac{A^3}{8} = 1$, $\Rightarrow \boxed{A = 2}$