1.

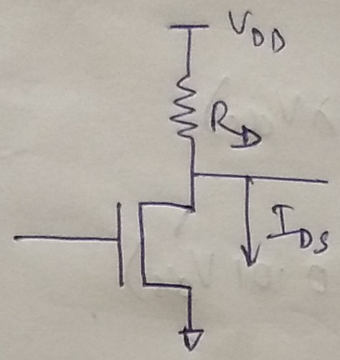

$V_{Tn} = 1V$

$K_n' = 1mA/V^2$

$\lambda = 0.01 V^{-1}$

$V_{DD} = 10V$

$V_{SS} = 0$

I. Given $I_{DS} = 4.5mA$

$V_{DS} = V_{DD} - I_{DS} R_D$

for saturation, $V_{DS} > V_{GS} - V_{Tn}$

a)

$I_{DS} = \frac{K_n'}{2}(V_{GS} - V_{Tn})^2$ {without considering early ~~body~~ effect

$(V_{GS} - V_{Tn})^2 = \frac{9m}{1m} = 9$

$V_{GS} - V_{Tn} = \pm 3$

$V_{GS} = \pm 3 + 1$

$= +4V$ (for NMOS, $V_{GS} > V_{Tn}$ for conduction)

$\therefore V_{GS} = +4V$

$V_{DD} - I_{DS} R_D > V_{GS} - V_{Tn}$

$10 - 4.5m \cdot R_D > 4 - 1$

$-4.5m \cdot R_D > -7$

$R_D > \frac{7}{4.5} K$

Minimum value of $R_D = 1.555 K\Omega$

b) considering ~~body~~ early effect

$$I_{ds} = \frac{K_n'}{2}(V_{gs} - V_{Tn})^2 (1 + \lambda V_{ds})$$

$$4.5m = \frac{1m}{2}(V_{gg} - 1)^2 (1 + 0.01 V_{ds})$$

$$9 = (V_{gg} - 1)^2 (1 + 0.01 V_{ds})$$

$V_{ds} > V_{gs} - V_T$ for SAT

i.e $V_{gg} - 1$

$$9 = (V_{gg} - 1)^2 (1 + 0.01 \times (V_{gg} - 1))$$

$$= (V_{gg}^2 - 2V_{gg} + 1)(0.01 V_{gg} + 0.99)$$

$$= 0.01 V_{gg}^3 + (0.99 - 0.02) V_{gg}^2 + (0.01 - 1.98) V_{gg} + 0.99$$

$$V_{gg} = 3.9566 V$$

$$V_{ds} = V_{dd} - I_{ds} R_D$$

$$V_{gg} - V_T = V_{dd} - I_{ds} R_D$$

$$3.9566 - 1 = 10 - 4.5m R_D$$

$R_D = 1.5652 K\Omega$ (Minimum value)

II. $r_o = \frac{1}{\lambda I_{ds}}$

$= \frac{1}{0.01 \times 4.5m} = 22.22 K\Omega$

CS Gain, $A_v = -g_m R_D || r_o$

without effect of λ,

$g_m = \sqrt{2 K_n' I_D}$

$= \sqrt{2 \times 1m \times 4.5m}$

$= 3mS$

$A_v = -3m \times (22.22K || 1.555K)$

$= -4.3598$

considering effect of λ,

$g_m = \frac{2 I_{DS}}{V_{GS} - V_{Tn}} = \sqrt{2 K_n' I_D (1 + \lambda V_{ds})}$

$= \frac{2 \times 4.5m}{3.9566 - 1} = 3.044 mS$

$A_v = -3.044m \times (22.22K || 1.5652K)$

$= -4.3866$

III. say $R_D = r_o = 22.22K\Omega$

$V_{DD} = I_{DS} R_D + V_{DS}$

$= 4.5m \times 22.22K + 2.9566$

$= 102.9466V$

iv)

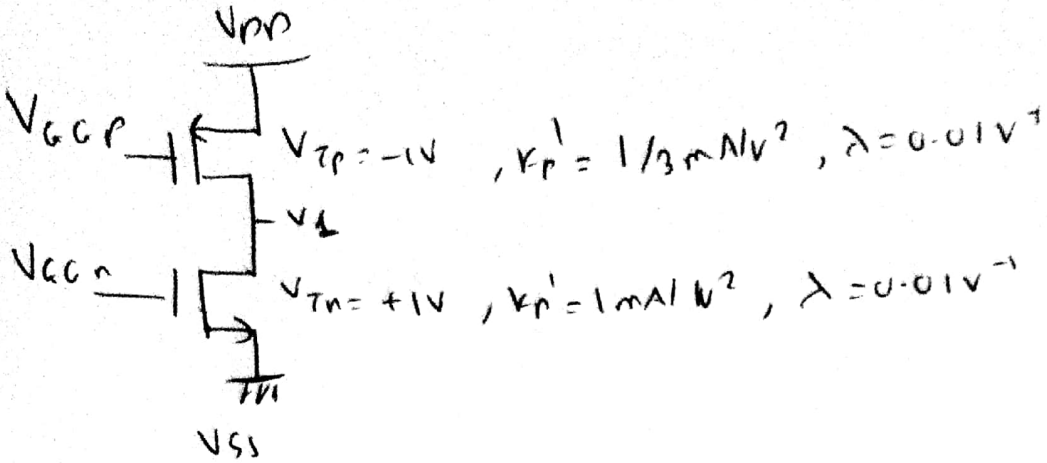

$I_{DS} = 4.5mA$

a) Neglecting effect of λ

For NMOS

$$I_{DS} = \frac{K_n'}{2}(V_{GGn} - V_{tn})^2$$

$$4.5mA = \frac{1mA/}{2}(V_{GG} - V_{tn})^2$$

$$\therefore \boxed{V_{GGn} = +4V}$$

For saturation $V_1 > V_{GGn} - V_{tn}$

$V_1 > 3V$ (let $V_1 = 3V$)

For PMOS to be in saturation

$$V_{SD} > V_{SG} - |V_t|$$

$$\cancel{V_{DD}} - V_1 > \cancel{V_{DD}} - V_{GGP} - |V_{tp}|$$

$$V_1 < V_{GGp} + |V_{tp}|$$

$$\therefore |V_{GGP}| > V_1 - |V_{tp}|$$

$$|V_{GGP}| > 2V$$

$$\boxed{V_{GGP} \doteq 2V}$$

Scanned by CamScanner

$$I_D = \frac{k_p'}{2}[V_{GS} - V_{tp}]^2$$

$$4.5 = \frac{1}{6}[V_{GSP} + 1]^2$$

$$V_{GSP} + 1 = \pm\sqrt{27}$$ For PMOS, V_{GS} is negative

$$V_{GSP} + 1 = -\sqrt{27}$$

$$V_{GGP} - V_{DD} + 1 = -\sqrt{27}$$

$$\boxed{V_{DD} = 8.196\ V}$$

b) Including the effect of λ

For NMOS

$$I_{ds} = \frac{k_n'}{2}(V_{GS} - V_{tn})^2(1 + \lambda V_{DS})$$

$$4.5\,mA/V = \frac{1\,mA/V}{2}(V_{GG} - 1)^2(1 + \lambda V_1)$$

For saturation,

$$V_1 > V_{GG} - V_{tn}$$

$$V_1 > V_{GG} - 1$$

$$9 = (V_{GG} - 1)^2(1 + \lambda(V_{GG} - 1))$$

On solving as in question (I)

$$\boxed{V_{GGn} = 3.9566\ V}$$

$$V_1 = 2.9566\ V$$

For PMOS in saturation

$$V_{GGP} > V_1 - |V_{tp}|$$

$$V_{GGP} > 2.9566 - 1$$

Scanned by CamScanner

$$\boxed{V_{GGP} = 1.9566\,V}$$

For PMOS

$$I_d = \frac{k_n'}{2}(V_{GSP} - V_{tp})^2 (1 + \lambda V_{DSP})$$

$$4.5\,mA = \frac{\frac{1}{3}\,mA/V}{2}(V_{GG} - V_{DD} - V_{tp})^2 (1 + \lambda (V_1 - V_{DD}))$$

$$27 = (2.96 - V_{DD})^2 (1 + 0.01 (V_1 - V_{DD}))$$

$$27 = (2.96 - V_{DD})^2 (1.03 - 0.01 V_{DD})$$

$$27 = (8.76 - 5.92 V_{DD} + V_{DD}^2)(1.03 - 0.01 V_{DD})$$

$$27 = 9.02 - 6.09 V_{DD} + 1.03 V_{DD}^2 - 0.0876 V_{DD} + 0.0592 V_{DD} - 0.01 V_{DD}$$

$$0 = -0.01 V_{DD}^3 + 1.0892 V_{DD}^2 - 6.1776 V_{DD} - 17.98$$

$$\boxed{V_{DD} = 8.2935\,V}$$

Scanned by CamScanner

v) Small signal Circuit :

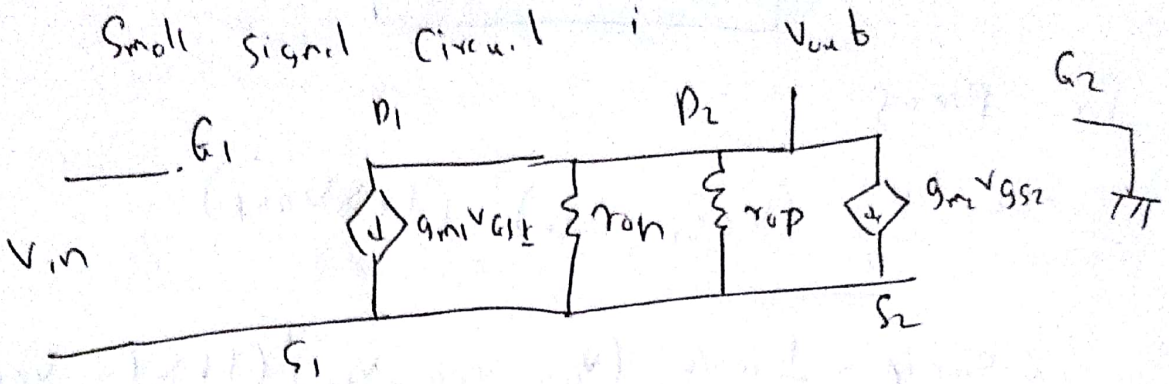

Since $V_{G2S2} = 0$

$g_{m2} V_{GS2} = 0$

we get

$\therefore A_v = -g_{m1} (r_{op} \| r_{on})$

Considering X

$$g_m = \frac{2 I_{DS}}{V_{GS} - V_{th}} = \frac{2 \times 4.5\,mA}{3.95 - 1}$$

$$g_{m1} = 3.04\ mS$$

$$r_{on} = \frac{1}{\lambda_1 I_D} = \frac{1}{0.01 \times 4.5\,mA} = 22.22k = r_{op}$$

$$\therefore A_v = -g_{m1} \frac{r_{on}}{2} = -3.04\,mS \times 11.11\,K$$

$$\boxed{A_v = -33.74}$$

Scanned by CamScanner

(VI)

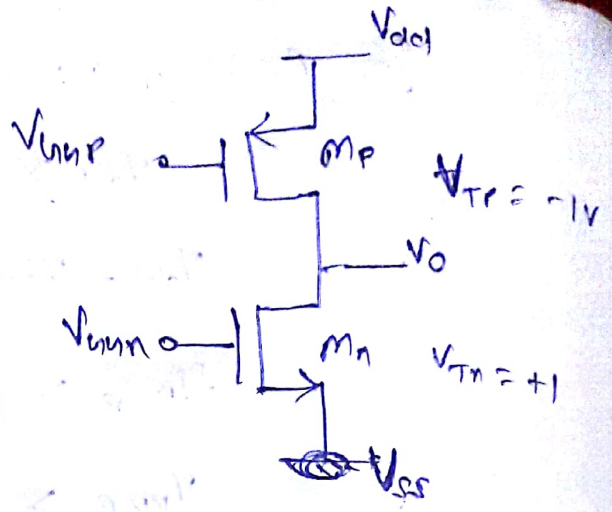

for

$I_d = 4.5 mA$

and $V_o = 0 V$ (DC value)

(a) <u>λ is negligible</u>

for nmos,

$$I_d = \frac{K_n'}{2} (V_{GSn} - V_{Tn})^2$$

$$4.5 mA = \frac{1 mA}{2} (V_{GSn} - V_{Tn})^2$$

$$\Rightarrow \underline{V_{GSn} = +4 V}$$

→ for saturation

<u>nmos</u> → $V_D - V_{SS} \geq V_{bnn} - V_{SS} - V_{Tn}$

$\Rightarrow 0 - V_{SS} \geq V_{bnn} - V_{SS} - 1$

$\Rightarrow 1 \geq V_{bnn}$

$\Rightarrow \boxed{V_{bnn} \leq 1 V} \Rightarrow \boxed{\text{let } V_{bnn} = 0.9V}$

and $V_{GSn} = 4 V$ (calculated)

$\Rightarrow V_{bnn} - V_{SS} = 4$

$V_{bnn} = 4 + V_{SS}$

$\Rightarrow \boxed{V_{SSn} = 0.9 - 4 = -3.1 V}$

Scanned by CamScanner

for pmos in saturation

$$V_{sd} \geq V_{sn} - |V_{TP}|$$

$$V_{dd} - V_o \geq V_{dd} - V_{nmp} - |V_{TP}|$$

$$V_{nmp} \geq V_o - |V_{TP}|$$

$$V_{nmp} \geq 0 - 1 \qquad (\text{as given } V_o = 1V)$$

$$\boxed{V_{nmp} \geq -1\,V}$$

let $\boxed{V_{nmp} = 0\,V}$

and $I_d = \frac{K_p'}{2}\left(V_{sn} - |V_{TP}|\right)^2 = 4.5\,mA$

$$\Rightarrow V_{sn} - 1 = \pm\sqrt{27}$$

$$\Rightarrow V_{DD} - V_{nmp} - 1 = \pm\sqrt{27}$$

$$\Rightarrow V_{DD} = \sqrt{27} + 1 + 0$$

$$\boxed{V_{DD} = 6.19\,V}$$

(b) including effect of λ

for nmos

$$I_d = \frac{K_n'}{2}\left(V_{GS} - V_{Tn}\right)^2\left(1 + \lambda V_{DS}\right)$$

$$9 = (V_{GS} - 1)^2\left(1 + \lambda V_{DS}\right)$$

$$9 = (V_{GS} - 1)^2\left(1 - 0.01\,V_{SS}\right) \quad \text{--- (1)}$$

Scanned by CamScanner

→ for Saturation

$\cancel{V_{GS} > V_{DS}}$ $\quad V_{DS} \geq V_{GS} - V_{Tn}$

$\Rightarrow \quad 0 - V_{SS} \geq V_{nn} - V_{SS} - 1$

$V_{nnn} \leq 1 \quad \Rightarrow \boxed{V_{nnn} = 1V}$ (let)

and from equation (1)

$9 = (1 - V_{SS} - 1)^2 (1 - 0.01 V_{SS})$

$9 = V_{SS}^2 (1 - 0.01 V_{SS})$

$\Rightarrow V_{SS}^2 - 0.01 V_{SS}^3 - 9 = 0$

$\Rightarrow -0.01 V_{SS}^3 + V_{SS}^2 - 9 = 0$

$V_{SS} = 3V, -2.95V$ (after solving)

Hence $\boxed{V_{SS} = -2.95V}$

for PMOS

$V_{nnp} = 0V$ (as calculated in part (a))

and $I_d = 4.5mA = \frac{1}{6}(V_{SG} - |V_{tp}|)^2 (1 + \lambda V_{SD})$

$27 = (V_{dd} - 0 - 1)^2 (1 + 0.01(V_{dd} - 0))$

$27 = (V_{dd} - 1)^2 (1 - 0.01 V_{dd})$

$27 = (V_{dd}^2 - 2V_{dd} + 1)(1 - 0.01 V_{dd})$

$-0.01 V_{dd}^3 + 1.02 V_{dd}^2 - 2.01 V_{dd} - 26 = 0$

Scanned by CamScanner

So $V_{dd} = 6.37\,V, -4.09\,V$

Hence $\boxed{V_{dd} = 6.37\,V}$

(vii)

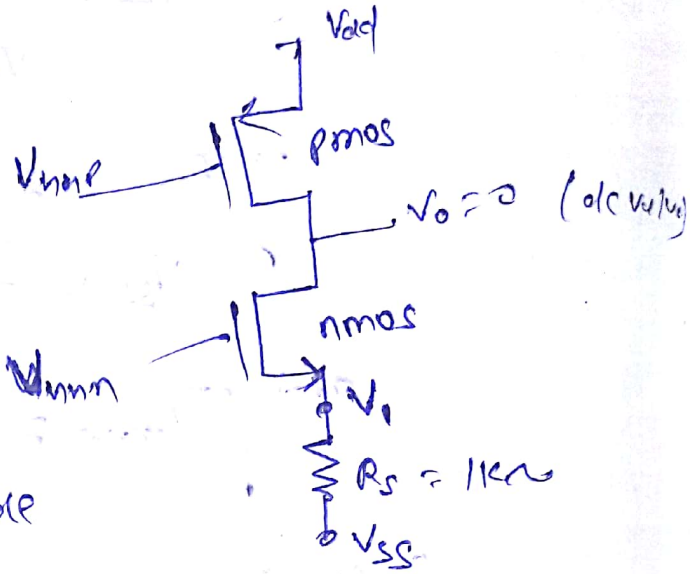

(a) λ is negligible

as we calculated value of source node (V_1) in (vi)(a)

$V_1 = -3.1\,V$

now by applying KVL,

$V_1 - R_s I_d = V_{ss} \Rightarrow V_{ss} = -3.1 - 1 \times 4.5$

$\boxed{V_{ss} = -7.6\,V}$

and value of V_{unn} will be same as in (vi)(a)

$\boxed{V_{unn} = 0.9\,V}$

(b) and for pmos,

value of V_{ump} and V_{DD} will be same as we have calculated in Ans (vi)(a)

→ for $\boxed{V_{ump} = 0\,V}$, $\boxed{V_{DD} = 6.19\,V}$

Scanned by CamScanner

(b) λ is not negligible:

→ source node of nmos will be same as (vi)(b) V_{nmp}

Value of $V_1 = -2.95\,V$

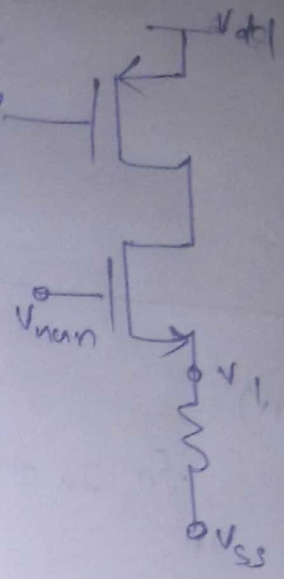

and by KVL,

$$V_{SS} = V_1 - R_S I_d$$

$$\Rightarrow V_{SS} = -2.95 - 1 \times 4.5\,V$$

$$\boxed{V_{SS} = -7.45\,V}$$

and

$$\boxed{V_{nmn} = 1V}$$

for pmos -

value of Vdd and Vnmp will be same as we have calculated in (vi) → (b) part.

Hence $\boxed{V_{dd} = 6.37\,V}$

$$\boxed{V_{nmp} = 0\,V}$$

Scanned by CamScanner

viii)

$I_D = 4.5mA$

$$g_m = \frac{2 I_D}{V_{gs} - V_{tn}}$$

$$= \frac{2 \times 4.5mA}{3.95 - 1}$$

$$= 3.05 mS$$

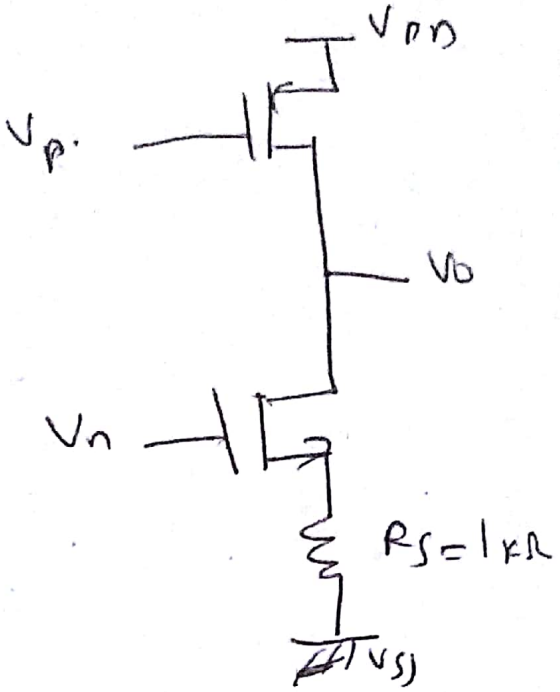

Small signal analysis

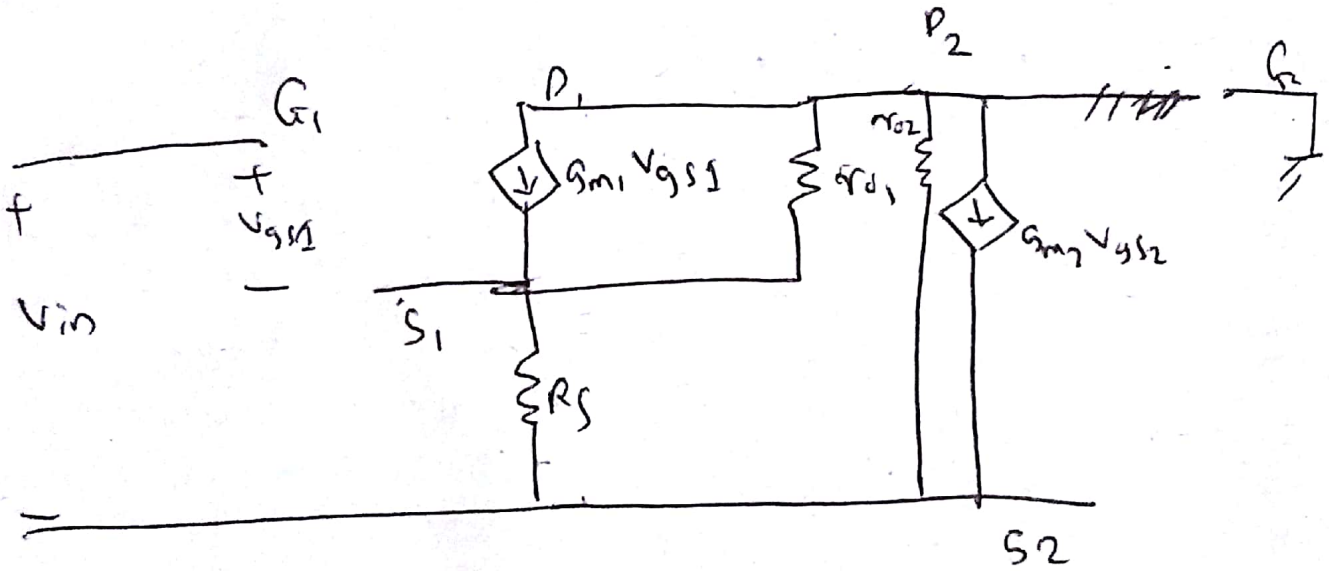

$V_{gs2} = 0$

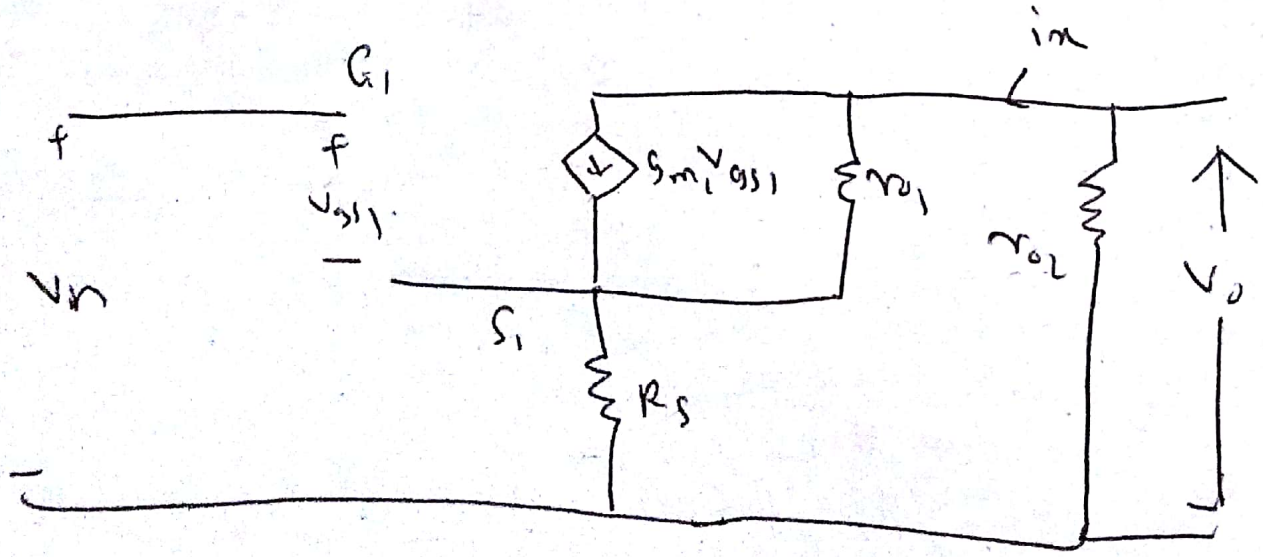

Scanned by CamScanner

$$V_o = -i_x r_{o2} \quad \text{——} \quad (I)$$

$$V_{in} = V_{gs1} + i_x R_s$$

$$\therefore V_{gs1} = V_{in} - \left(\frac{-V_o}{r_{o2}} R_s\right)$$

$$V_{gs1} = V_{in} + \frac{R_s}{r_{o2}} V_o \quad \text{——} \quad (II)$$

$$V_o = \left(i_x - g_{m1} V_{gs1}\right) r_{o1} + i_x R_s$$

$$V_o = i_x (R_s + r_{o1}) - g_{m1} r_{o1} V_{gs1}$$

$$V_o = -\frac{V_o}{r_{o2}} (R_s + r_{o1}) - g_m r_{o1} \left(V_{in} + \frac{R_s V_o}{r_{o2}}\right)$$

$$\left(1 + \frac{R_s + r_{o1}}{r_{o2}} + \frac{g_{m1} r_{o1} R_s}{r_{o2}}\right) V_o = -g_{m1} r_{o1} V_{in}$$

Now $\lambda_n = \lambda_p$. $\therefore r_{on} = r_{op} = r_{o1} = r_{o2} = \frac{1}{\lambda I_D} = 22.22\,k$

$$\left(2 + \frac{R_s}{r_o} + g_m R_s\right) V_o = -g_{m1} r_{o1} V_{in}$$

$$\therefore A_v = \frac{-g_{m1} r_o}{2 + \frac{R_s}{r_o} + g_{m1} R_s}$$

Scanned by CamScanner

$$\boxed{A_v = -13.30}$$

ix) Now R_s is bypass with source by pass capacitor C_s.

In expression of gain we will replace R_s by Z_s where $Z_s = R_s \parallel \frac{1}{sC_s}$

$$|A_v| = \frac{g_{m1} r_o}{2 + \left(\frac{1}{r_o} + g_{m1}\right) Z_s}$$

i) $f = 1\,kHz$

$$|A_v| = \frac{g_m r_o}{2 + \left(\frac{1}{r_o} + g_m\right) \times \frac{R_s}{R_s C_s s + 1}}$$

$$|A_v| = 15.25$$

ii) $f = 1\,MHz$

$$|A_v| = 33.885$$

iii) $f = 1\,GHz$ $\quad |A_v| = 33.885$

Scanned by CamScanner