HOME AUTOMATION SYSTEMS BASED ON THE INTERNET OF THINGS

Introduction

With the help of your Smartphone from anywhere in the world. Esp8266 a WIFI Module plays a vital role in this IOT Based Home Automation Project. An Esp8266 Module will receive commands from your Smartphone, wirelessly through the internet. To encode those commands in a Smartphone and send it to ESP8266, for doing this work we need an application to active for the task. There are many applications available, but we are going to choose the best one and easy access is “Blynk” these applications. It is also available for both platforms such as IOS and Android. You can create Creative Projects with the Help of the Blynk APP.

Protocol used with diagram.

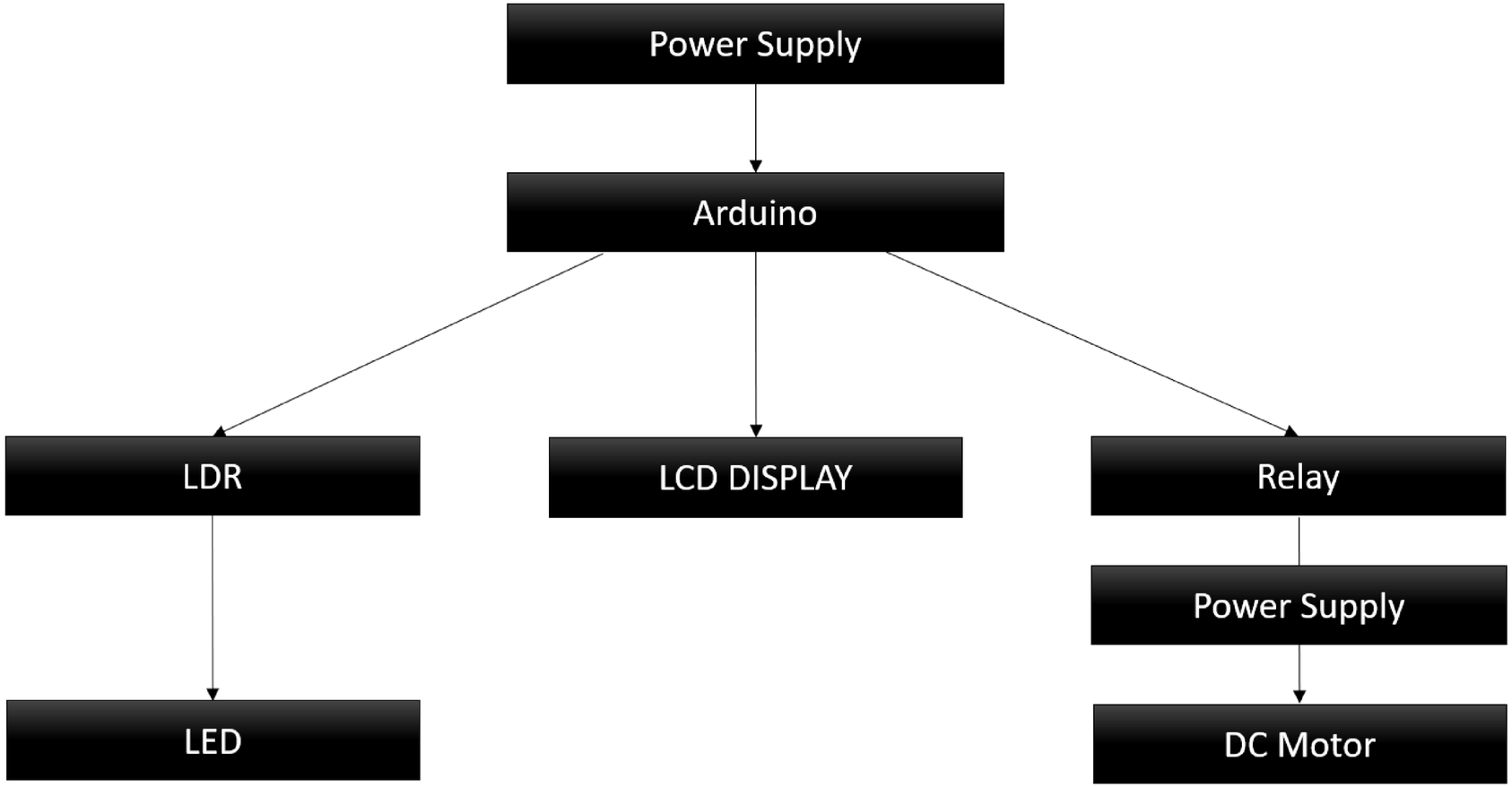
Power Supply
Arduino
LDR
LCD DISPLAY
Relay
Power Supply
LED
DC Motor

Fig-1 explains the system design of Arduino UNO. Users no need to do anything, just had to plug in the device and everything will be automated.

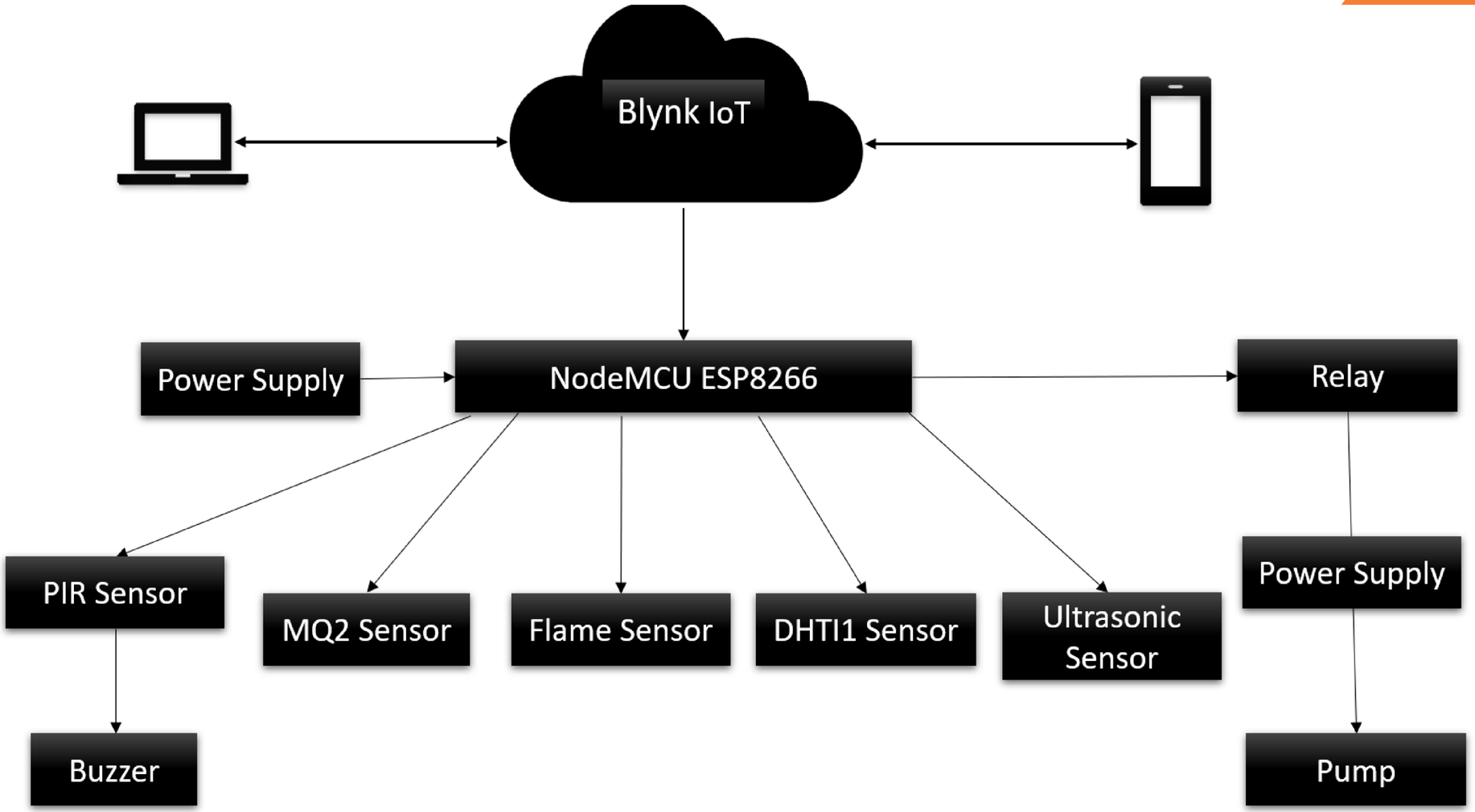
Blynk IoT
Power Supply
NodeMCU ESP8266
Relay
PIR Sensor
MQ2 Sensor
Flame Sensor
DHTI1 Sensor
Ultrasonic Sensor
Power Supply
Buzzer
Pump

Fig-2 explains MQTT architecture where ESP8266 receives these messages form MQTT broker and control appliances accordingly. IBM introduced a lightweight Message Queue telemetry Transport protocol to provide machine-to-machine (M2M) communications. MQTT works on top of TCP layer and provides publish asynchronous communications. Publish/subscribe provides best IOT services than request/response protocols since clients do not require to wish updates so that it requires less bandwidth. In MQTT broker (server) contains topics. Clients can be act as a publisher and send messages to the broker for a specific topic. Subscribers receive messages from brokers.

Project Details

Wi-Fi based home automation system mainly consist of three modules, the server, the hardware interface module, and the software package. The figure shows the system model layout. Wi-Fi technology is used by server, and hardware Interface module to communicate with each other. The same technology uses to login to the server web-based application. The server is connected to the internet, so remote users can access server web-based application. through the internet using compatible web browser. Software of the latest home automation system is split to server application software, and Microcontroller (ESP 8266) firmware.

The Arduino software, built using C language, using IDE comes with the microcontroller itself. Arduino software is capable for gathering events from connected sensors, then applies action to actuators and preprogramed in the server. Another job is to report the and record the history in the server DB. The server application software package for the proposed home automation system, is a web-based application built using asp.net. The server application software can be accessed from internal network or from internet if the server has real IP on the internet using any internet navigator supports asp.net technology.

PROBLEM STATEMENT AND SIGNIFICANCE

Now days all have busy life for e.g., person staying somewhere for job and another someone comes and if you having an important meeting can’t pick them and they don’t have keys of home. This will put you in trouble. So, with help of this project sitting in office person can open home for our people. If you are working whole day in office and after your office work you don’t want to do household works then home will do its own works like task of filling water, charging devices in absence of home owner.

Flow Chart and System Architecture:

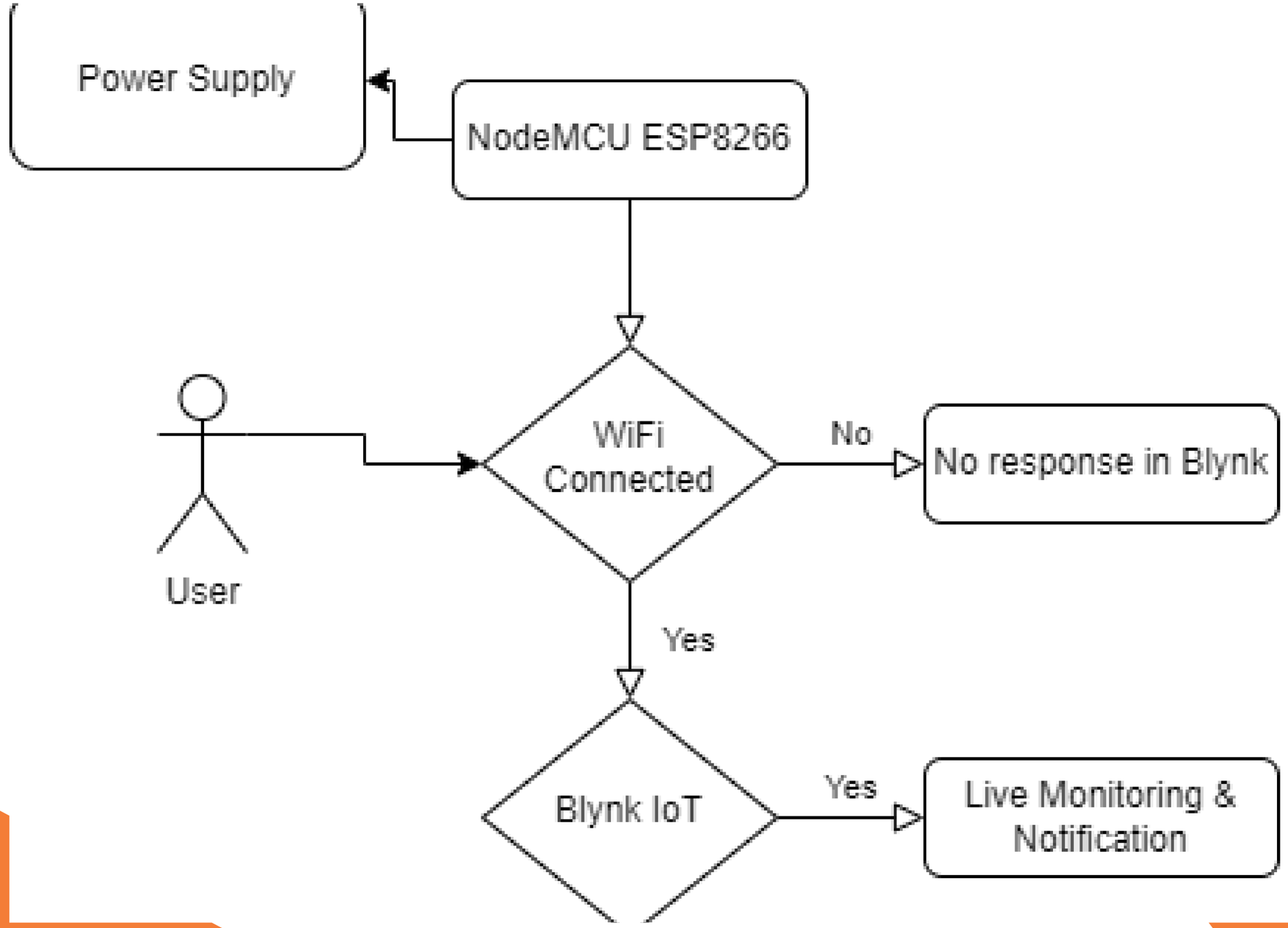
Power Supply
NodeMCU ESP8266
User
WiFi Connected
No
No response in Blynk
Yes
Blynk IoT
Yes
Live Monitoring & Notification

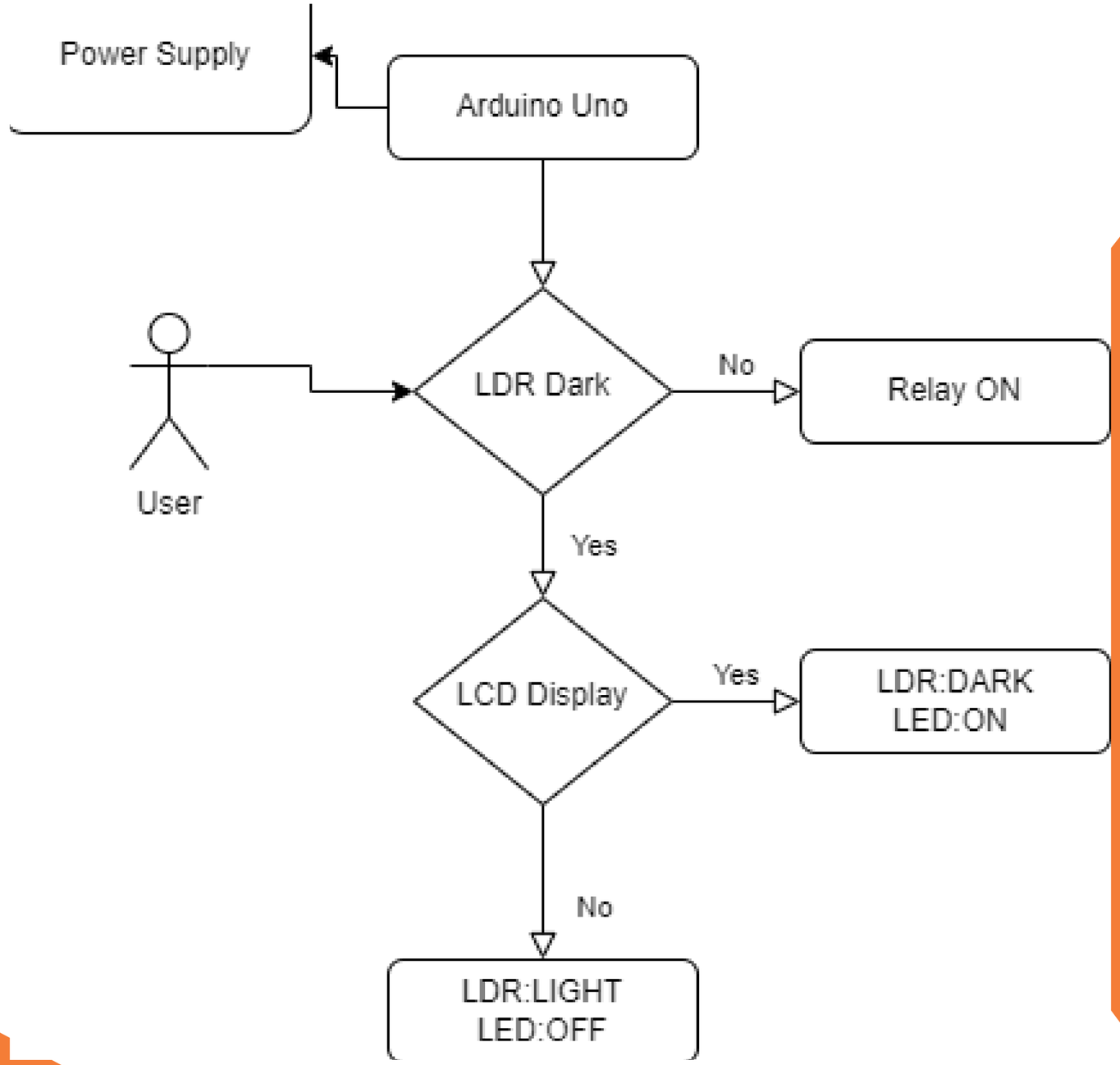
Power Supply
Arduino Uno
User
LDR Dark
No
Relay ON
Yes
LCD Display
Yes
LDR:DARK
LED:ON
No
LDR:LIGHT
LED:OFF

Circuit Diagram and Description:

NodeMCU ESP8266 :

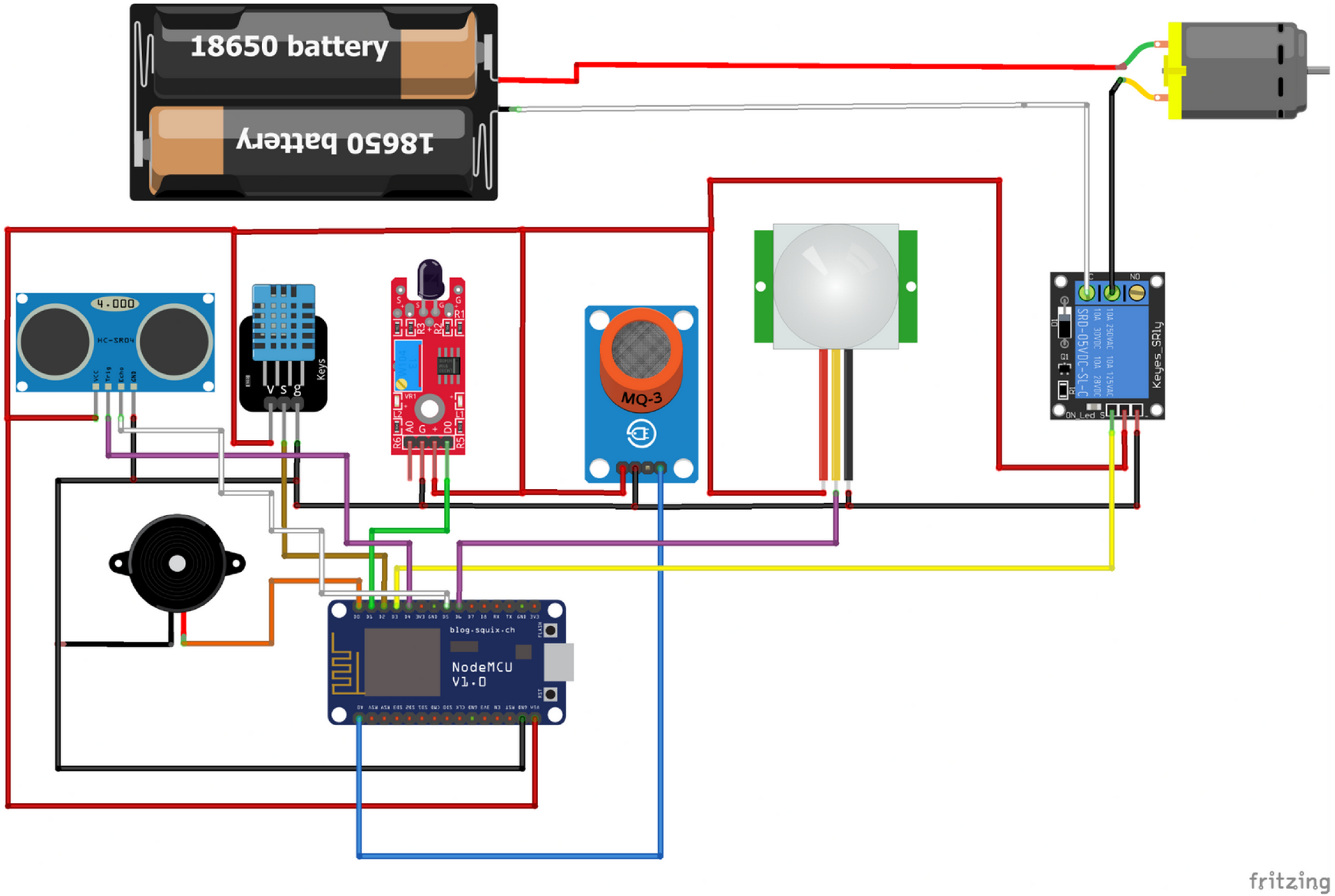
18650 battery
18650 battery
HC-SR04
Keys
MQ-3
SRD-05VDC-SL-C
Keyes_SRly
blog.squix.ch
NodeMCU
V1.0
fritzing

Arduino and LDR:

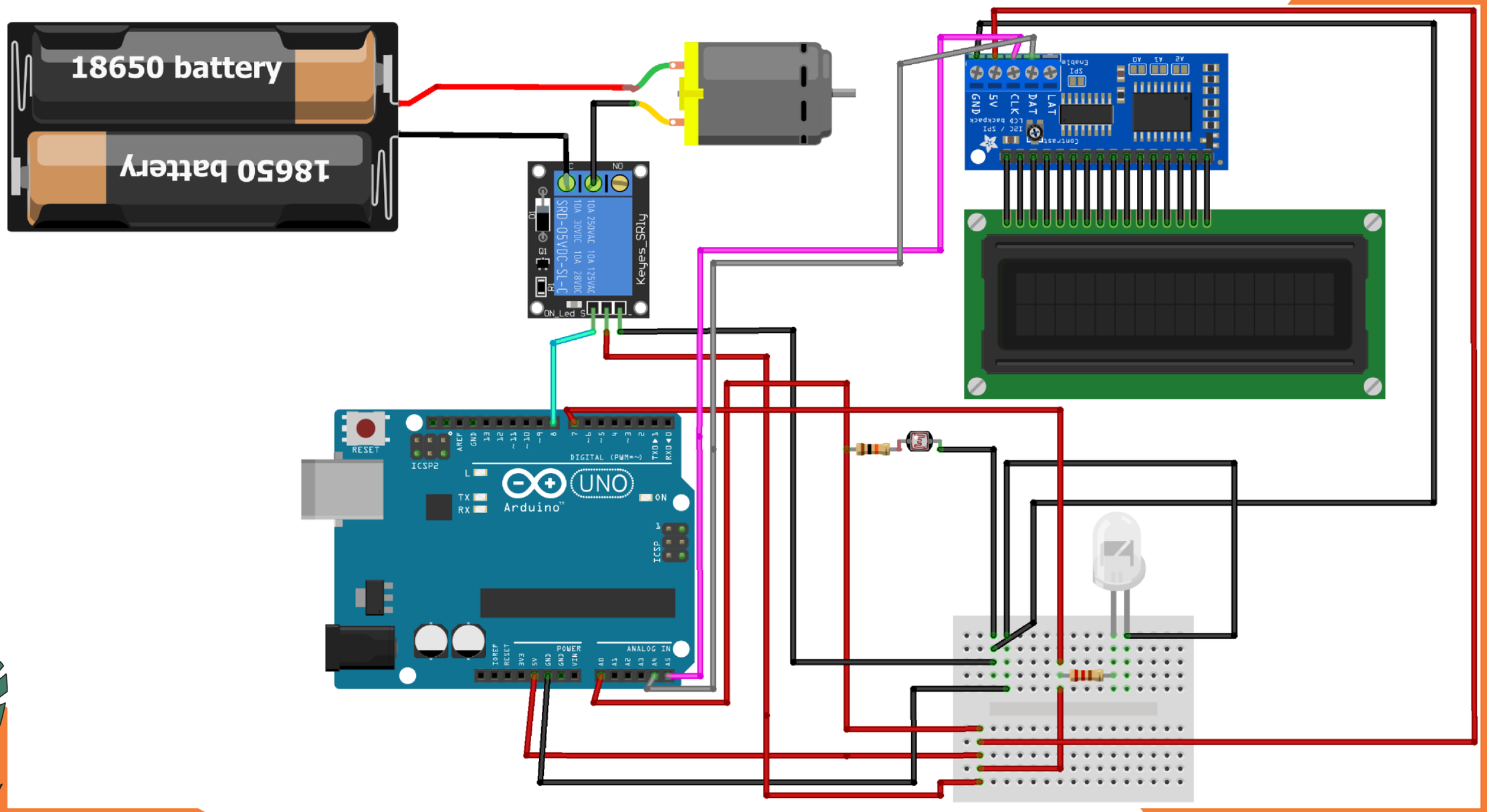
18650 battery
18650 battery
SRD-05VDC-SL-C
Keyes_SRly
ON_Led
NO
C
D1
R1
Q1
GND
5V
CLK
DAT
LAT
Contrast
LCD backpack
I2C / SPI
Enable
SPI
A0
A1
A2
RESET
ICSP2
ICSP
L
TX
RX
ON
UNO
Arduino
DIGITAL (PWM=~)
POWER
ANALOG IN

Result Analysis

NodeMCU ESP8266 :

Component Name	Collection Status	Data	Event
NodeMCU ESP8266		Hotspot Connected	ON
DHT 11 Sensor (Temp)	Sends data to Blynk	Data in temp gauge(ºC)	ON
DHT 11 Sensor (Humidity)	Sends data to Blynk	Data in humidity gauge(%)	ON
MQ2 gas Sensor	Sends data to blynk	Data in ppm	gassensor
PIR Sensor	Sends data to blynk	Activates the buzzer	motionpir
Flame Sensor	Sends data to blynk		fire_sensor
Ultrasonic Sensor	Sends data to blynk	Data in centimeter	ON
Relay	Sends data to blynk	Pump On/Off Button	ON

Arduino and LDR:

Component Name	Collection Status	Data	Event
Arduino UNO R3	Power On	Serial.out	NA
LDR	Bright	Serial.out (Lumen)	Relay ON Display in LCD
LED	Dark	Serial.out (Lumen)	Relay OFF Displayin LCD

ADVANTAGES & DISADVANTAGES

Advantages

- The benefits of a technology include reduced error probability, ease of access, and low cost and power consumption.
- Can reduce human effort.
- Smarter processing and services.
- Can be implemented at any device and automated.
- Can be implemented at any device and automated.
- Alert system is quick in case of an emergency.
- Eliminates the use of PC for automation.
- Helps old age people to control the remote devices.
- Simple interface

Disadvantages

- Replacing humans is dangerous May take time and learning.
- Security concerns.
- Vulnerable to attacks.
- Most of the times range is restricted.
- High dependency on sensor devices which makes the system vulnerable if sensor fails.

CONCLUSION

This project presented is a low cost and flexible home control and monitoring system using Node MCU Board with internet and various sensors remotely controlled by Android OS smart phone. In this, Node MCU micro controller is used as an interface between user and hardware components. It is programmed and connected to several components according to the requirements. A micro web server is used as an application layer for communication between remote users and home devices, security systems. The microcontroller that make a role as the brain of this project must be programmed using Arduino IDE.

THANK YOU

Presented by
SAUMYADEEP CHAKRABARTY (42-IT)
SUMITAVA DEB BARMA(44-IT)
ABHINAV KUMAR(46-IT)
ABIR BANERJEE(48-IT)