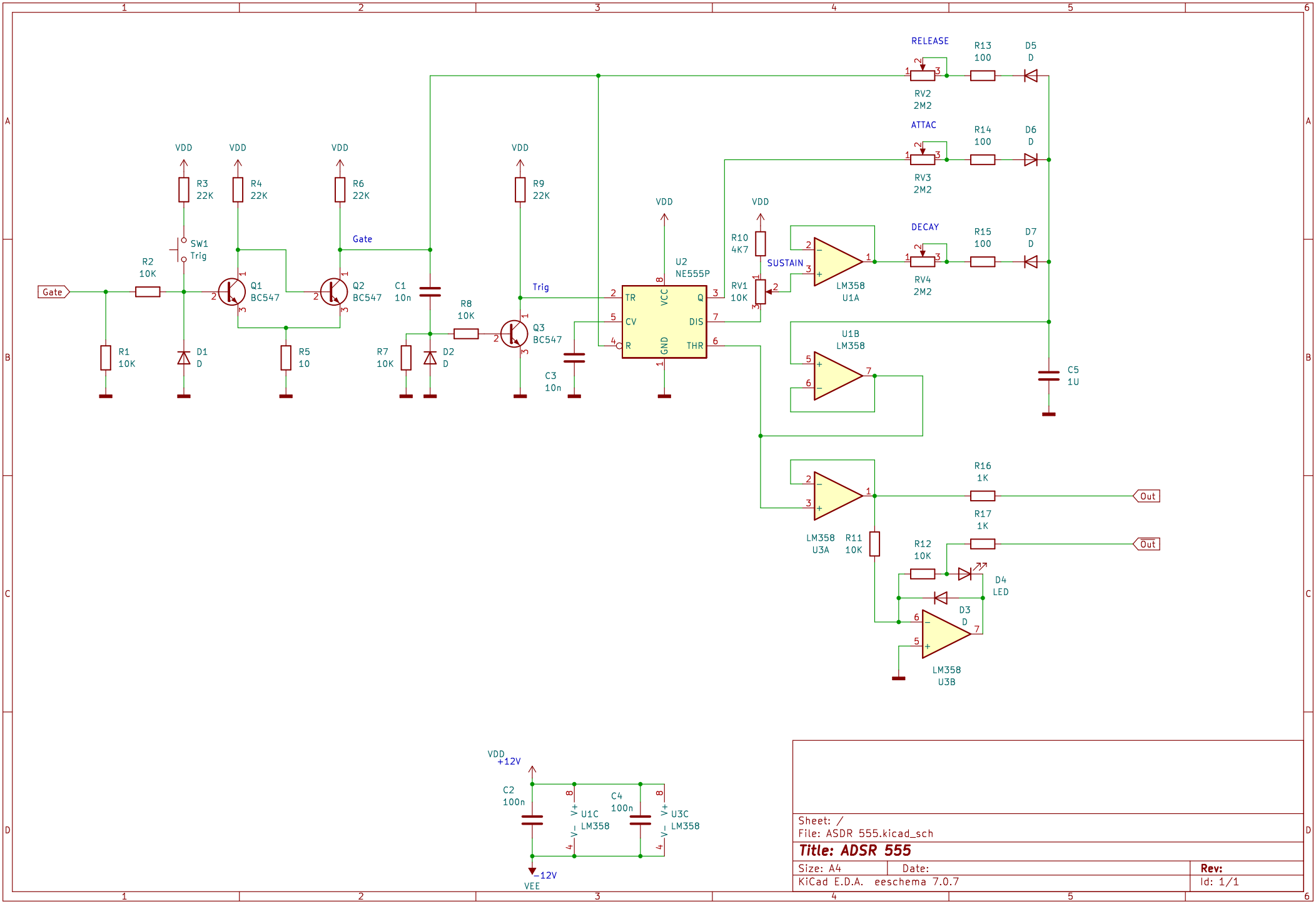

Sheet: /
File: ASDR 555.kicad_sch

Title: ADSR 555

Size: A4	Date:	Rev:
KiCad E.D.A. eeschema 7.0.7		Id: 1/1