POR Monitor

VCC1 = 2.925V
VCC2 = 1.050
RSTIN = 0.625

USB 2.0 Ports for External Peripheals (Protected)

Gigabit Ethernet

Isolated CAN-FD Ports

Front Panel – PWR Sw. & Indication

Isolated RS485 Ports

EXPANSION PORTS

EEPROM

*LOAD RESISTORS – REQ'D FOR SOME ATX PSU's

Part No: 304-001	DEVTANK
Devtank Ltd	
Sheet: /	
File: HILTOP_Motherboard.sch	
Title: HILTOP Motherboard	
Size: A2	Date: 2021-02-17
KiCad E.D.A. kicad 5.1.7-a382d34a888ubuntu18.04.1	Rev: Rev D
	Id: 1/12

Default Config – 101
Internal Defaults
Dynamic Power (local)
USB LED Mode

USB Signals to be tracked as 90R differential matched pairs

Over-current Monitoring on external ports only

Part No: 304-001	
Devtank Ltd	
Sheet: /USBHub/	
File: USBHub.sch	
Title: HILTOP Motherboard	
Size: A3	Date: 2021-02-17
KiCad E.D.A. kicad 5.1.7-a382d34a888ubuntu18.04.1	Id: 2/12
	Rev: Rev D

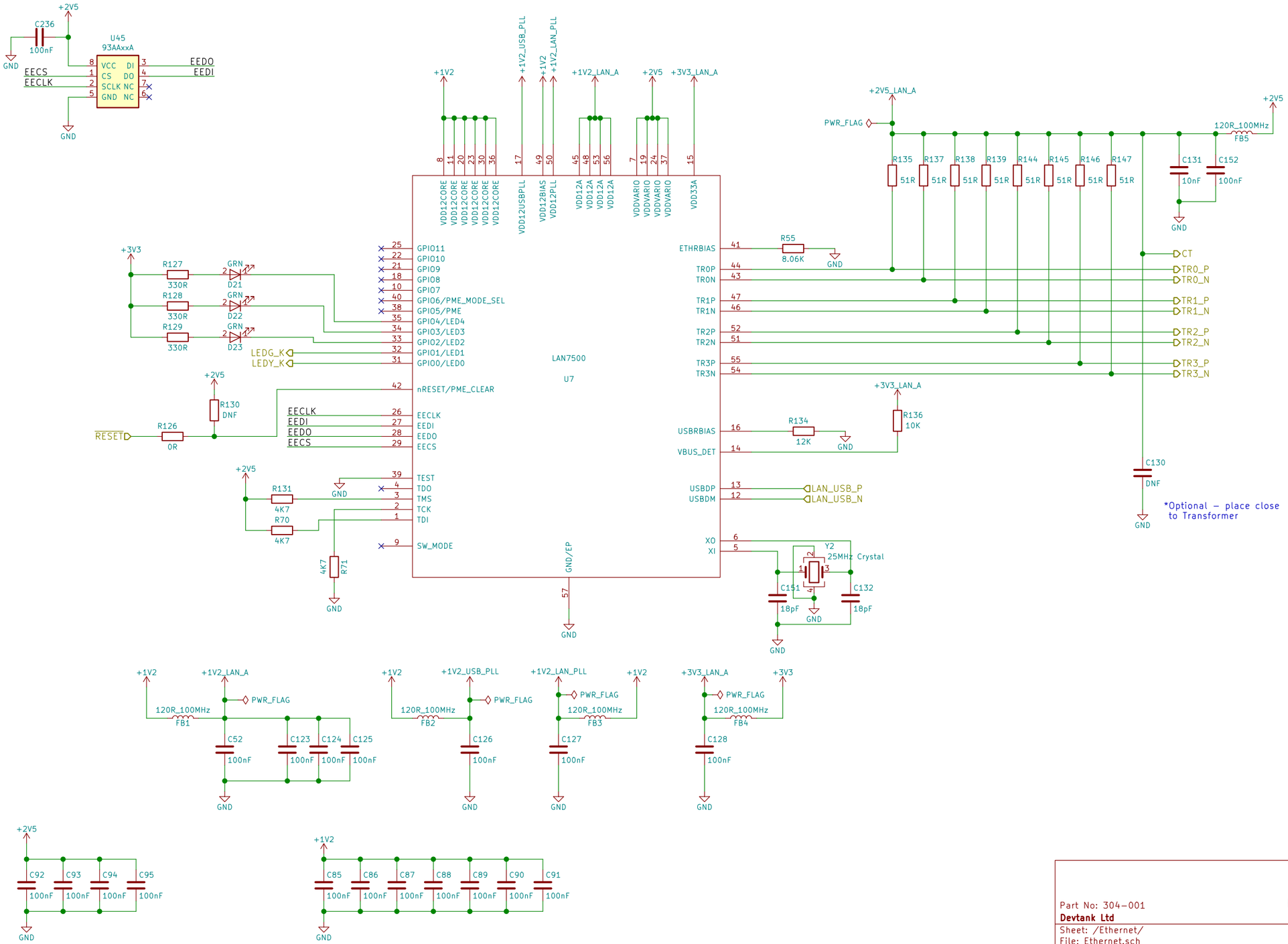

Part No: 304-001	
Devtank Ltd	
Sheet: /Ethernet/	
File: Ethernet.sch	
Title: HILTOP Motherboard	
Size: A3	Date: 2021-02-17
KiCad E.D.A. kicad 5.1.7-a382d34a888ubuntu18.04.1	Id: 3/12

Rev: Rev D

Real Time Clock

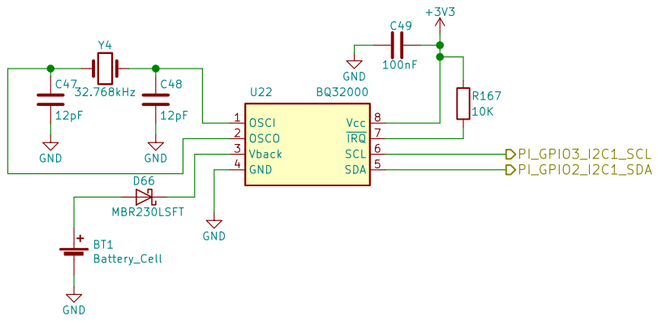

Onboard Temperature Monitor

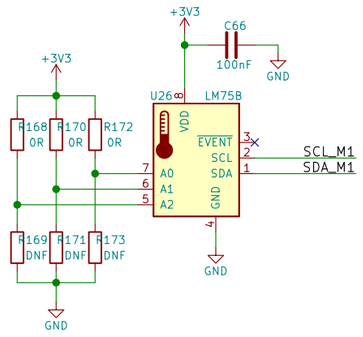

I/O Protection

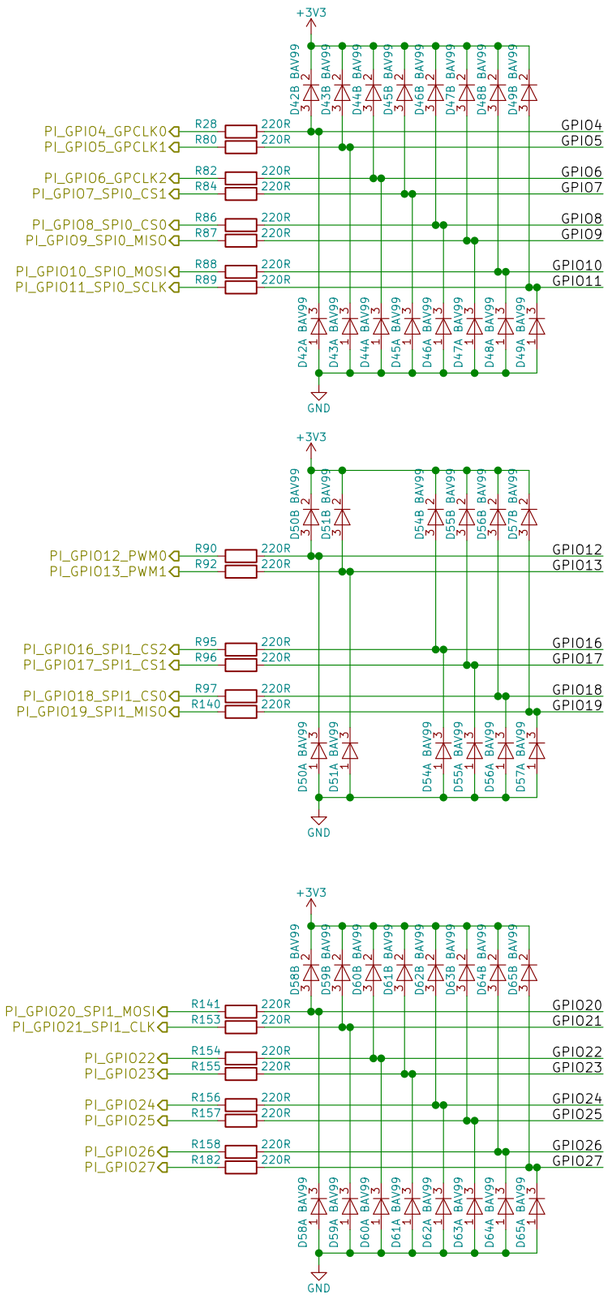

Raspberry Pi 3 Compute Module SO-DIMM

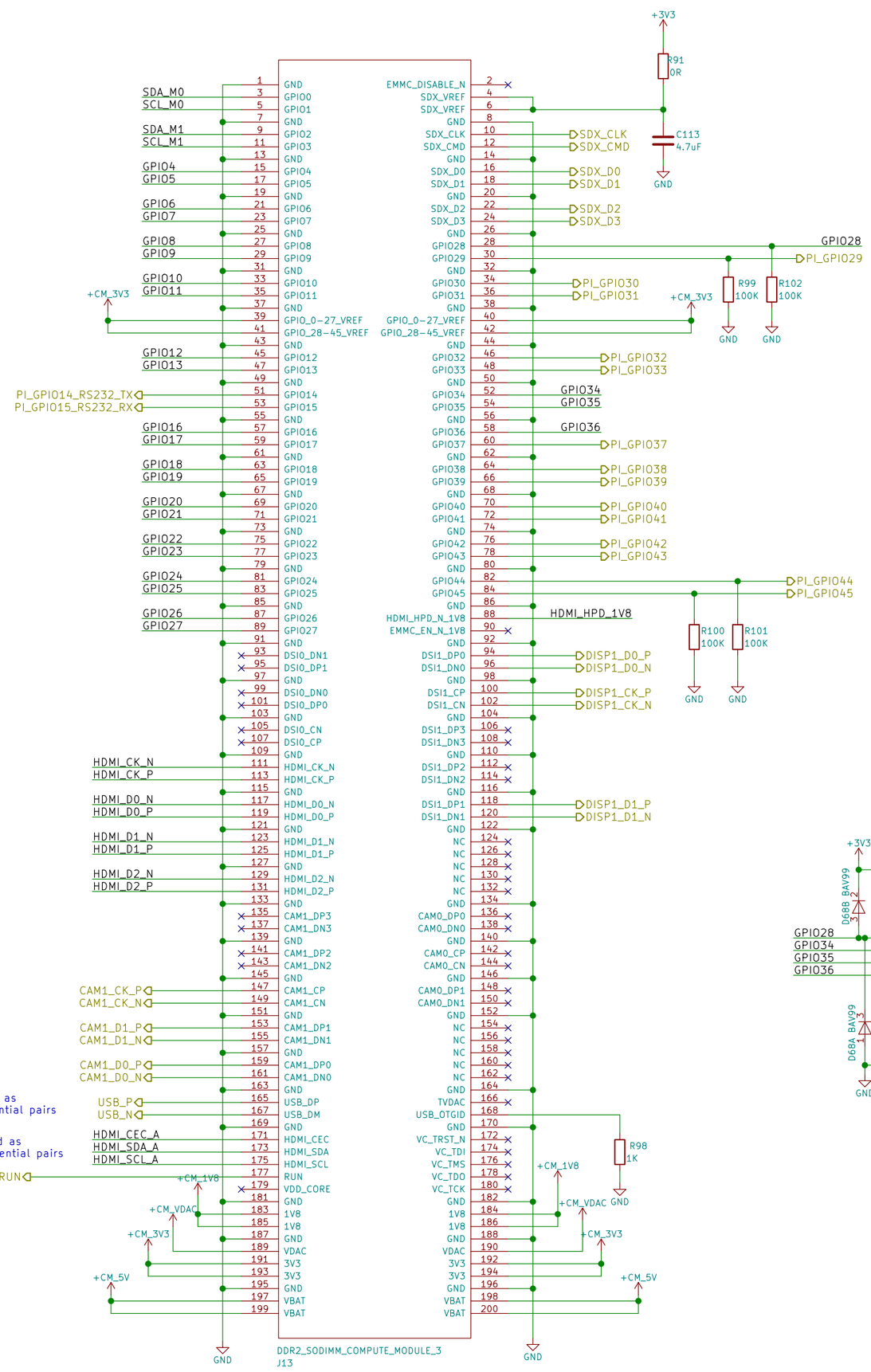

I/O Protection

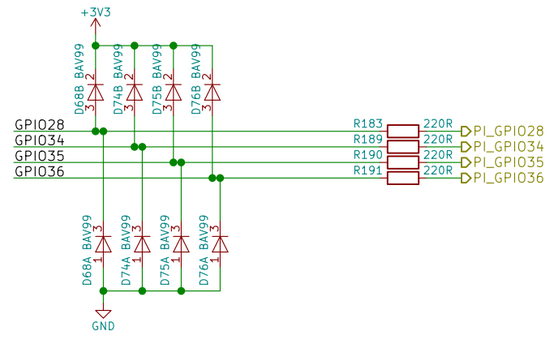

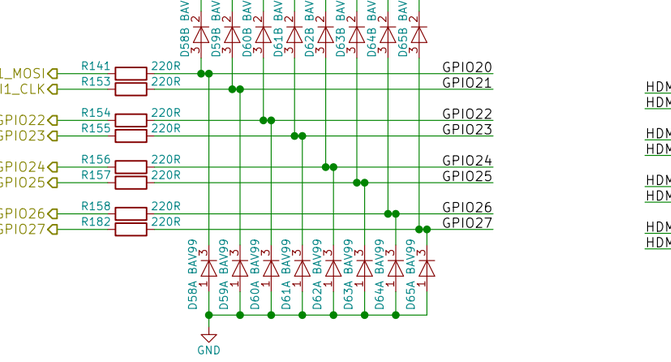

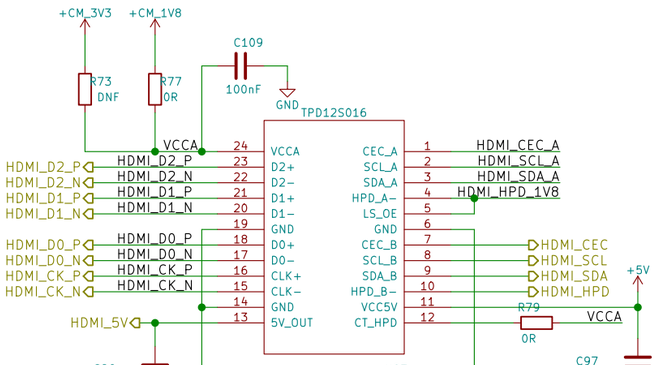

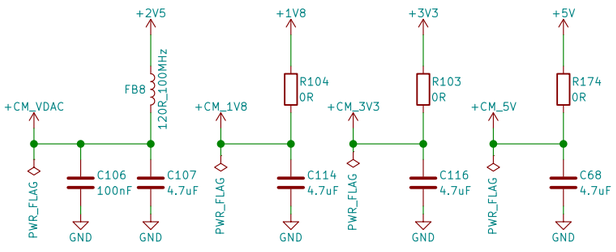

Part No: 304-001
Devtank Ltd

Sheet: /Processor/
File: Processor.sch

Title: HILTOP Motherboard

Size: A2	Date: 2021-02-17	**Rev: Rev D**
KiCad E.D.A. kicad 5.1.7-a382d34a888ubuntu18.04.1		Id: 4/12

+12V
C56 2.2uF
C58 2.2uF
C179 2.2uF
GND
R63 0R
+3V3
R57 75K
C57 100nF
R60 DNF
DC_DC_ENABLE
LM5118
VIN
UVLO
RT
EN
RAMP
AGND
SS
FB
COMP
VOUT
HS
HO
HB
VCCX
VCC
LO
PGND
CSG
CS
SYNC
PAD
U8
Q1 SI7148DP-T1-E3
TP2
C64 100nF
L4 10uH
TP1
HSRD1035 D6
C63 1uF
R67 0R
Q2 SI7148DP-T1-E3
TP95
C65 4.7uF
C181 4.7uF
C182 4.7uF
C183 4.7uF
C67 100uF
C186 100uF
C70 100uF
C79 100uF
C69 470nF
C117 100nF
R58 30K
R59 18K
C54 330pF
C118 100nF
R61 10K
C60 100nF
C180 100nF
D3 VB40100C
R68 0R
R69 0.015
C62 DNF
R65 10K
R66 0R
DNF C61
R62 820R
C111 1uF
PWR_ENABLE
R114 470R
R116 10K
Q4 2N7002
VADJ_DC
TP3
RL1 SPST-NO
D20 STPS1L30
U9
IN+
IN+
IN+
SH+
VIN+
GND
VS
IN-
IN-
IN-
SH-
VIN-
GND
REF
GND
OUT
INA250A3
R74 47K
R76 330R
R166 330R
C19 100nF
C192 100nF
R75 3K3
R143 DNF
R142 0R
C187 100nF
C115 1uF
TP4
TP6
TP5
TP7
PSU_SDA
PSU_SCL
+3V3
D8 BAV99
D10 BAV99
C194 100nF
U11
ADS1015
AIN0
AIN1
AIN2
AIN3
VDD
GND
ALERT/RDY
ADDR
SCL
SDA
R123 DNF
AIN0: Vin = VRET / 6.732 e.g. 30V = 4.456V
AIN1: Vin = 0 - 5V = 0 to 2.5A sensed current
D7 BAV99
D9 BAV99
C193 100nF
VMON_1
VMON_2
R133 330R
R165 330R
C188 100nF
C189 100nF
U12
MCP4725
VDD
SCL
SDA
A0
VOUT
GND
R118 DNF
DAC OUT = 0 - 2.5V = RET DC output of 0 - 30V
+5V
R115 2K
D19 LM4040
R113 10K
R112 3.16K
C184 100nF
U10
TLC271
V+
V-
BIAS
IN+
IN-
OUT
R64 51R
R132 10K
C185 100nF
-5V
R105 10K
C112 DNF
R117 47R
C190 100nF
VADJ_GND

Part No: 304-001
Devtank Ltd
Sheet: /AdjPower/
File: AdjPower.sch
Title: HILTOP Motherboard
Size: A3 | Date: 2021-02-17 | **Rev: Rev D**
KiCad E.D.A. kicad 5.1.7-a382d34a888ubuntu18.04.1 | Id: 5/12

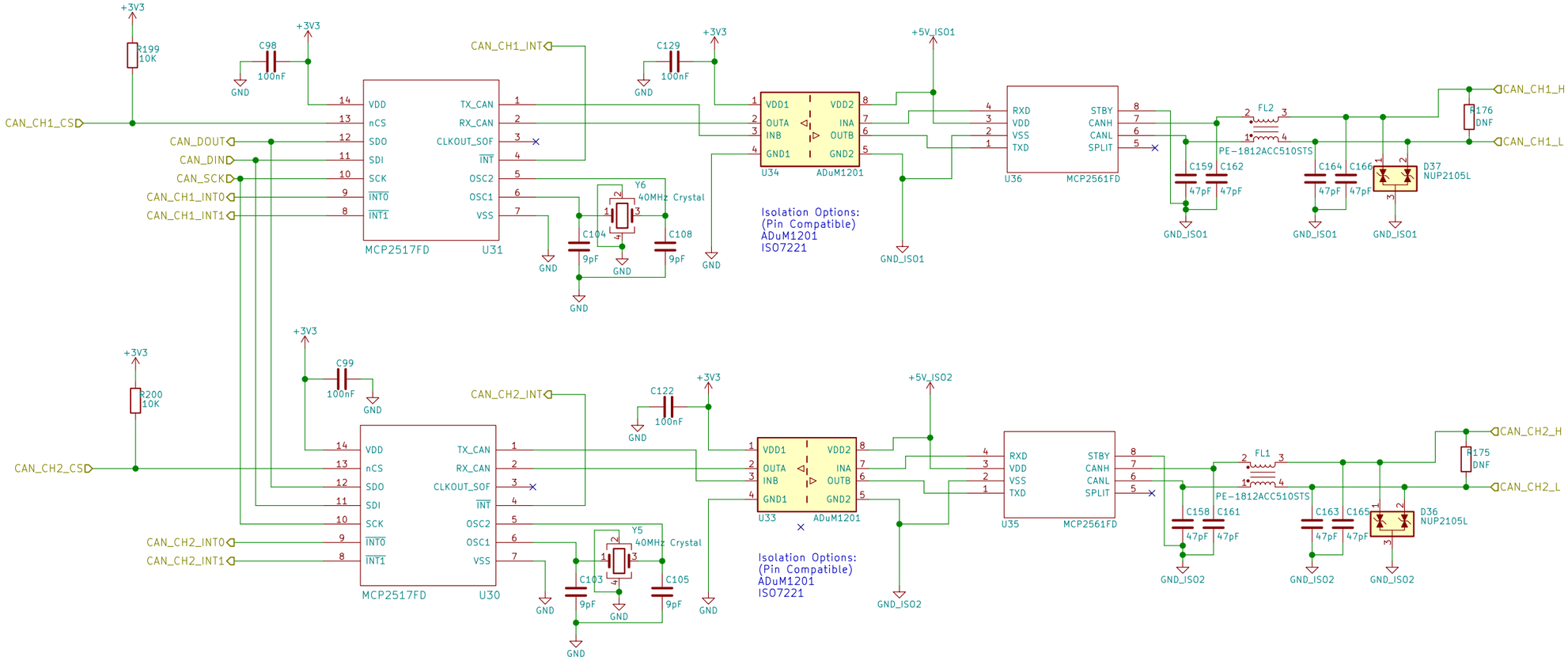

Part No: 304-001	
Devtank Ltd	
Sheet: /CAN/	
File: CAN.sch	
Title: HILTOP Motherboard	
Size: A3	Date: 2021-02-17
KiCad E.D.A. kicad 5.1.7-a382d34a888ubuntu18.04.1	**Rev: Rev D**
	Id: 6/12

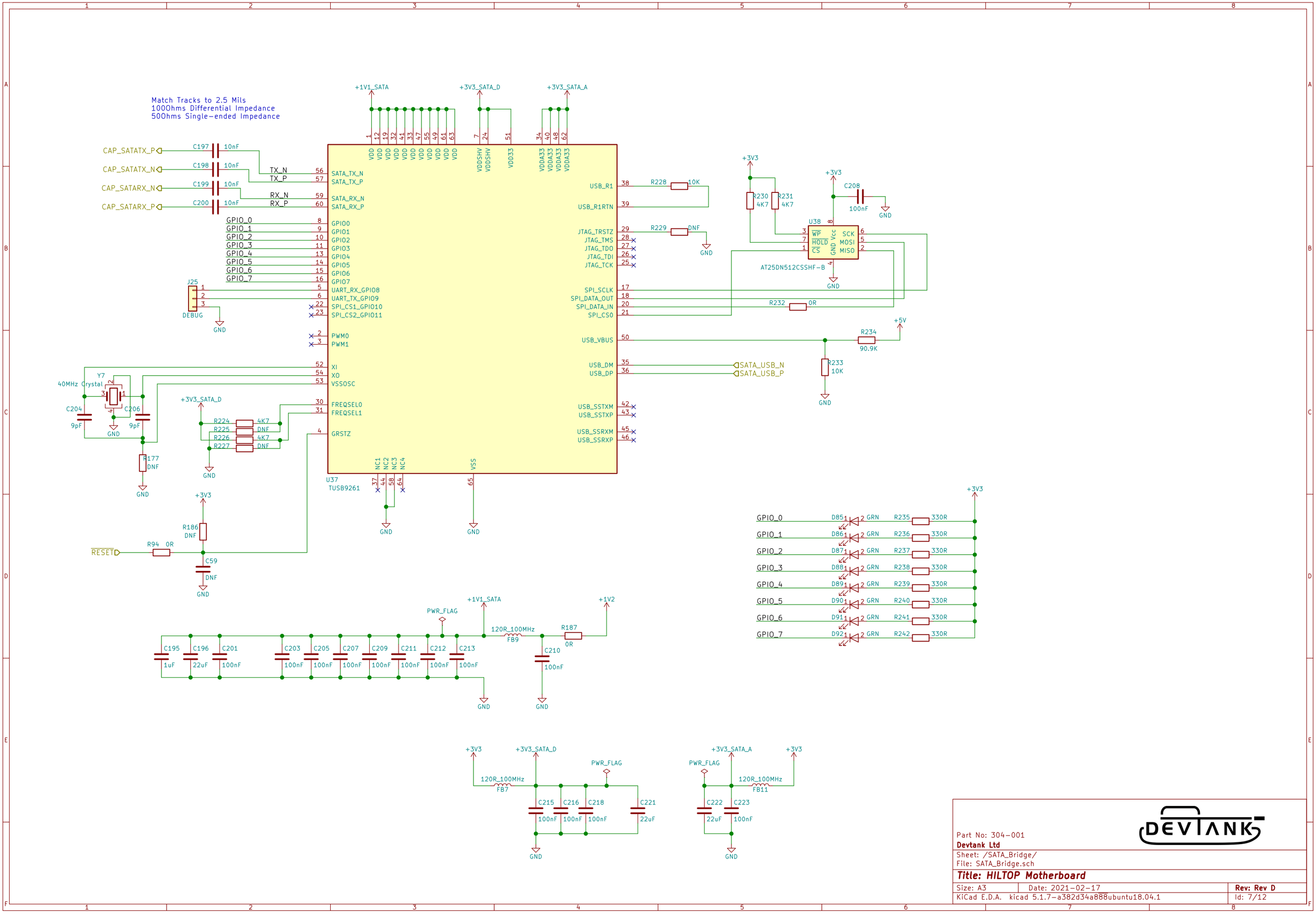

Part No: 304-001
Devtank Ltd
Sheet: /SATA_Bridge/
File: SATA_Bridge.sch

Title: HILTOP Motherboard

Size: A3	Date: 2021-02-17	**Rev: Rev D**
KiCad E.D.A. kicad 5.1.7-a382d34a888ubuntu18.04.1		Id: 7/12

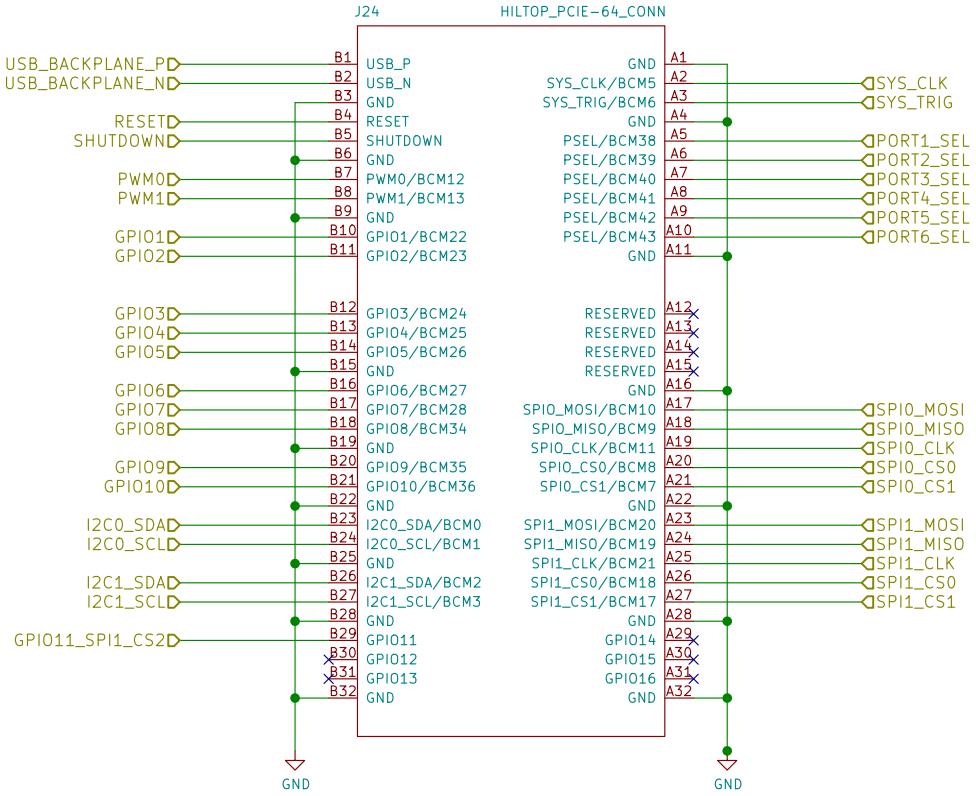

Part No: 304-001

Devtank Ltd

Sheet: /BackPlane/

File: BackPlane.sch

Title: HILTOP Motherboard

Size: A4	Date: 2021-02-17	**Rev: Rev D**
KiCad E.D.A. kicad 5.1.7-a382d34a888ubuntu18.04.1		Id: 8/12

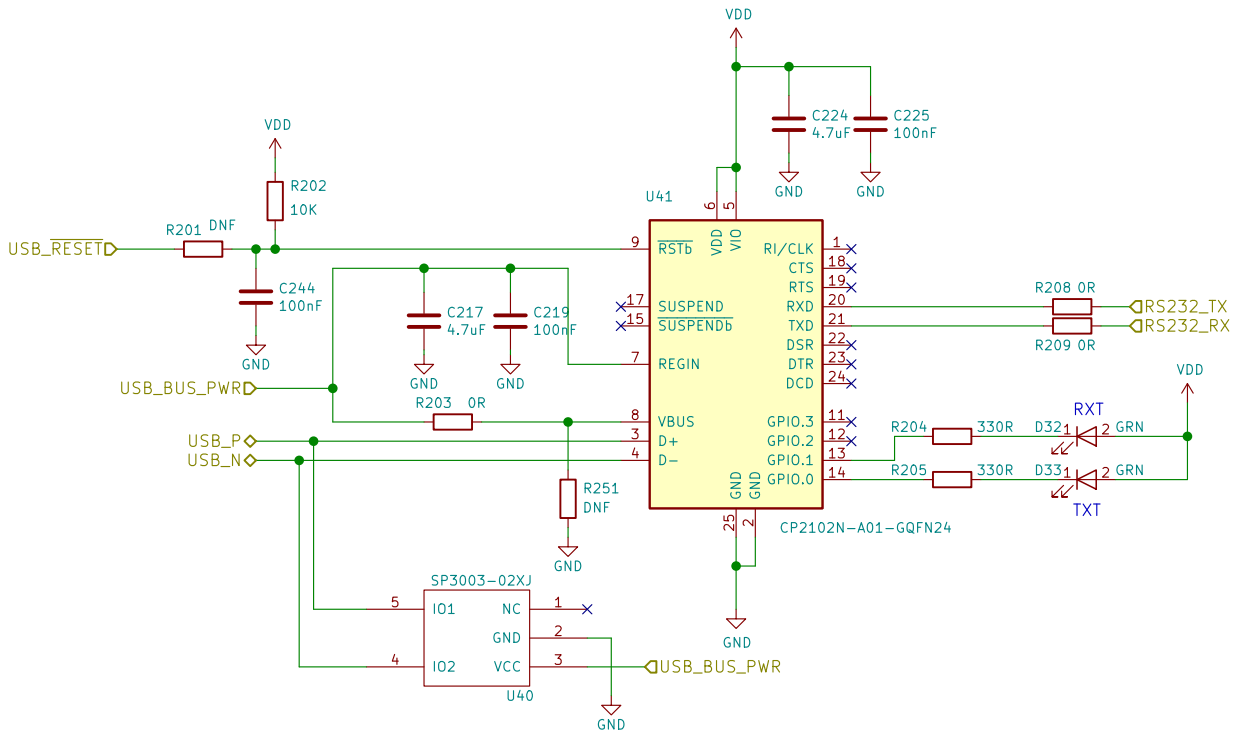

Part No: 304-001
Devtank Ltd

Sheet: /USB_Debug/
File: USB_Debug.sch

Title: HILTOP Motherboard

Size: A4	Date: 2021-02-17	**Rev: Rev D**
KiCad E.D.A. kicad 5.1.7-a382d34a888ubuntu18.04.1		Id: 9/12

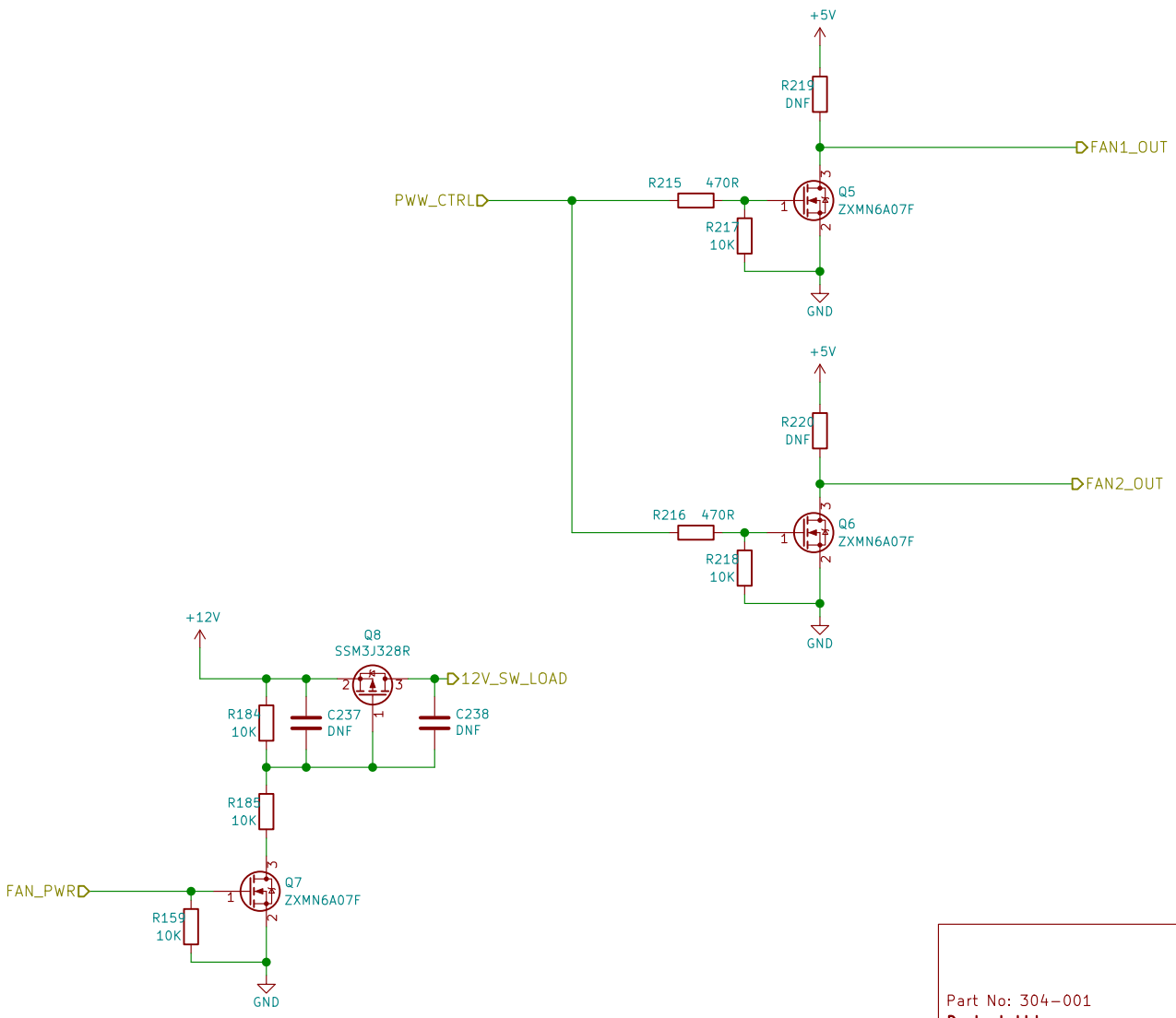

Part No: 304-001
Devtank Ltd

Sheet: /PWM_Fans/
File: PWM_Fans.sch

Title: HILTOP Motherboard

Size: A4	Date: 2021-02-17	**Rev: Rev D**
KiCad E.D.A. kicad 5.1.7-a382d34a888ubuntu18.04.1		Id: 10/12

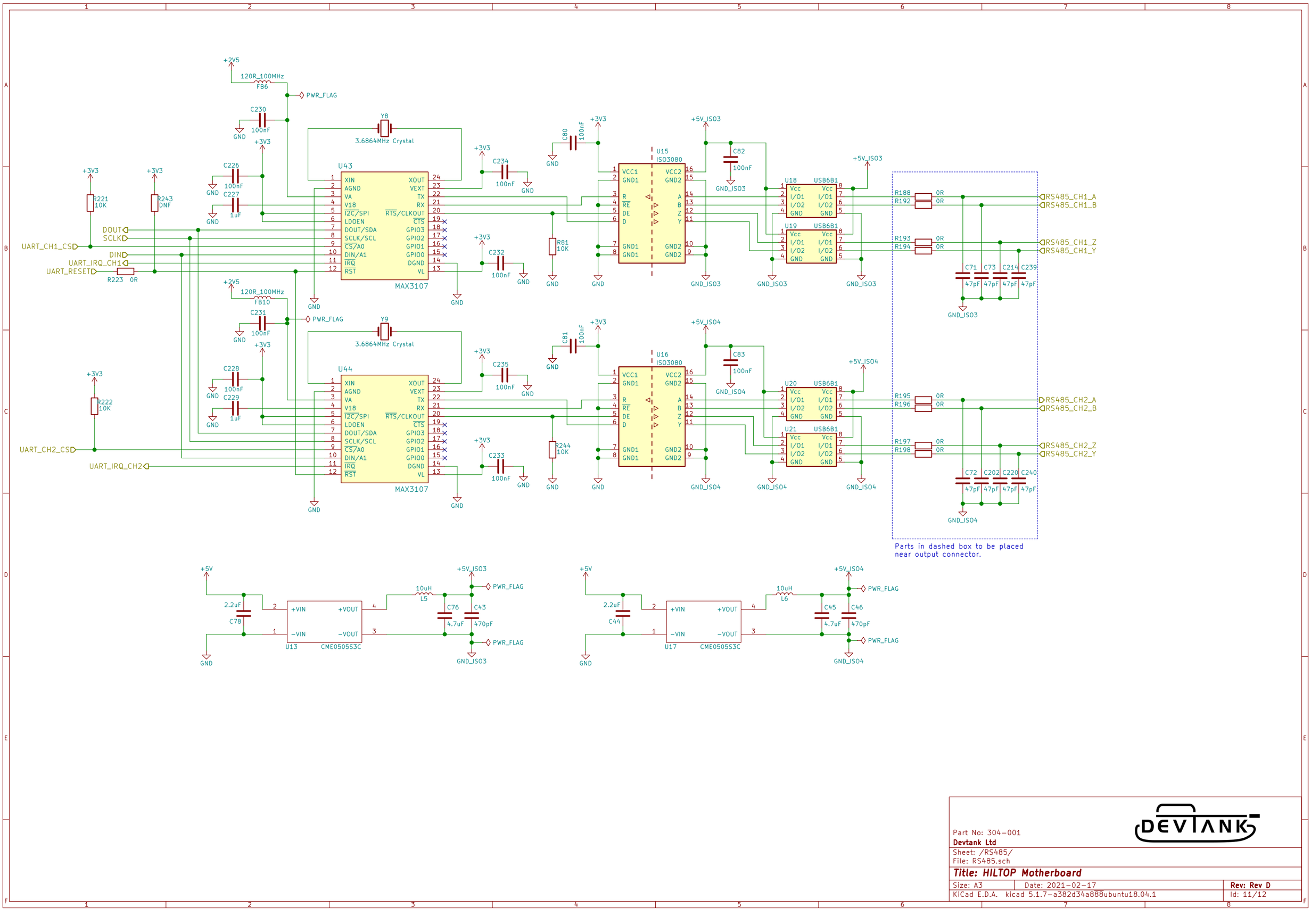

Part No: 304-001
Devtank Ltd

Sheet: /RS485/
File: RS485.sch

Title: HILTOP Motherboard

Size: A3	Date: 2021-02-17	**Rev: Rev D**
KiCad E.D.A. kicad 5.1.7-a382d34a888ubuntu18.04.1		Id: 11/12

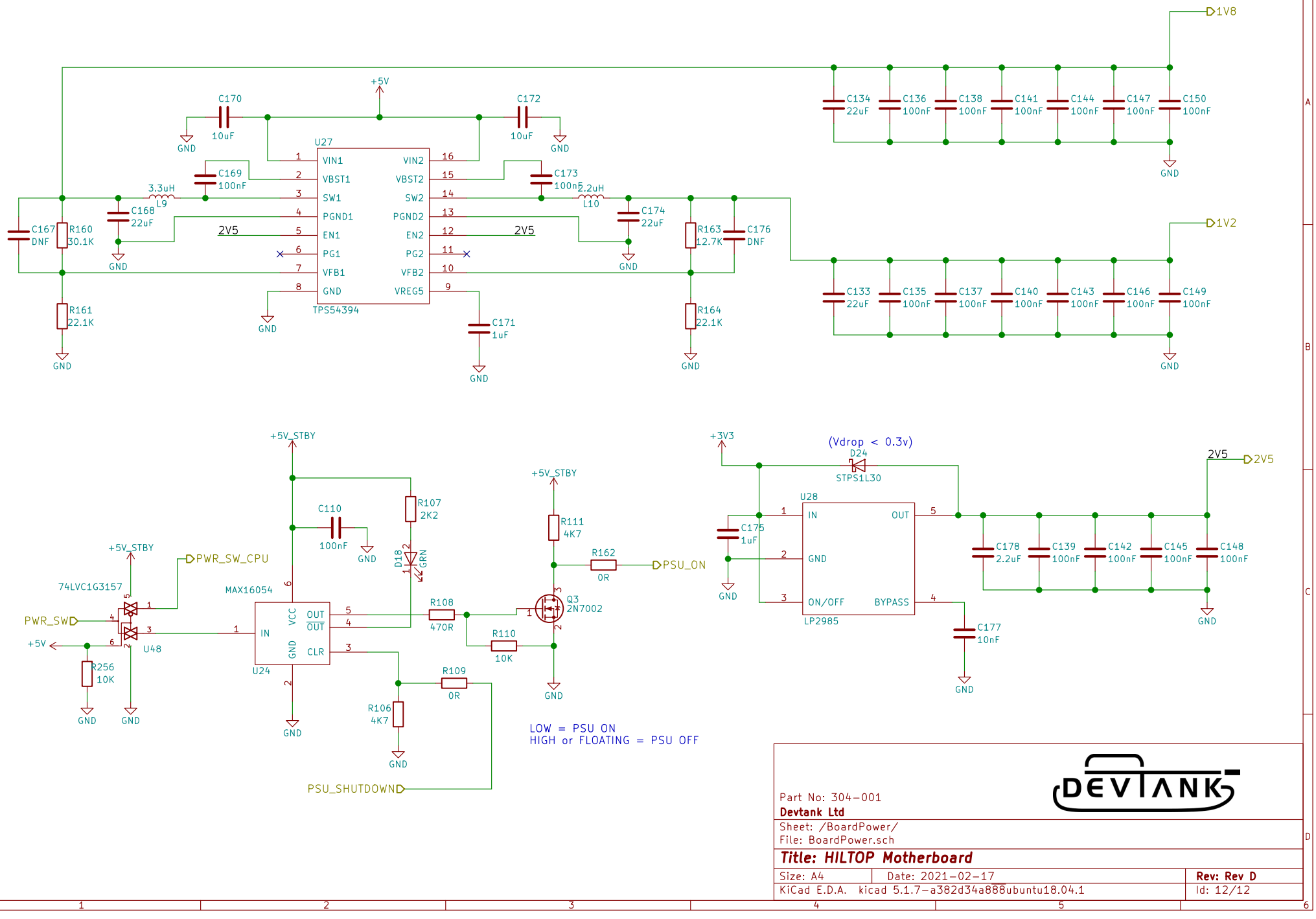

Part No: 304-001
Devtank Ltd
Sheet: /BoardPower/
File: BoardPower.sch

Title: HILTOP Motherboard

Size: A4	Date: 2021-02-17	**Rev: Rev D**
KiCad E.D.A. kicad 5.1.7-a382d34a888ubuntu18.04.1		Id: 12/12