DIGITAL GROUND to CHASSIS GROUND
OR Links to be placed close to each Mounting hole

USB 2.0 Ports for External Peripheals (Protected)

Gigabit Ethernet

POR Monitor

Front Panel – PWR Sw. & Indication

Isolated CAN-FD Ports

Isolated RS485 Ports

EXPANSION PORTS

*LOAD RESISTORS – REQ'D FOR SOME ATX PSU's

EACH EXP. PORT CONTAINS:
+12V, +3.3V, +5V, -5V
System Clock
System PWM
8 x GPIO Processor Pins
11 x GPIO FPGA Pins

VCC1 = 2.925V
VCC2 = 1.050
RSTIN = 0.625

Devtank Ltd
Sheet: /
File: HILTOP_Motherboard.sch
Title: HILTOP Motherboard
Size: A2 | Date: 26th January 2018 | Rev: Issue 1
KiCad E.D.A. kicad 5.0.0-fee4fd166ubuntu16.04.1 | Id: 1/12

Default Config – 101
Internal Defaults
Dynamic Power (local)
USB LED Mode

USB Signals to be tracked as 90R differential matched pairs

Over-current Monitoring on external ports only

Devtank Ltd
Sheet: /USBHub/
File: USBHub.sch
Title: HILTOP Motherboard
Size: A3 | Date: 26th January 2018 | Rev: Issue 1
KiCad E.D.A. kicad 5.0.0-fee4fd166ubuntu16.04.1 | Id: 2/12

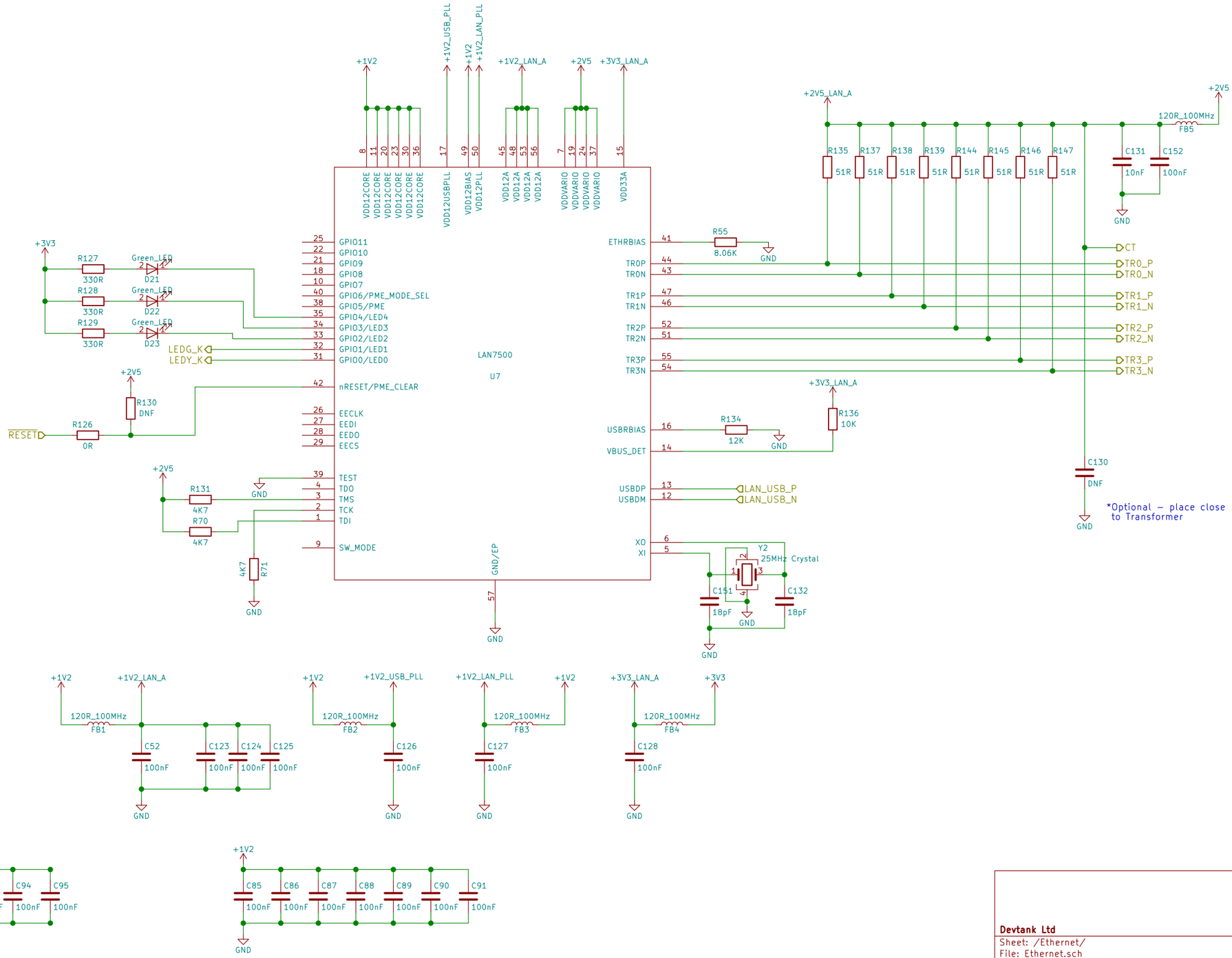

Devtank Ltd		
Sheet: /Ethernet/		
File: Ethernet.sch		
Title: HILTOP Motherboard		
Size: A3	Date: 26th January 2018	**Rev: Issue 1**
KiCad E.D.A. kicad 5.0.0-fee4fd166ubuntu16.04.1		Id: 3/12

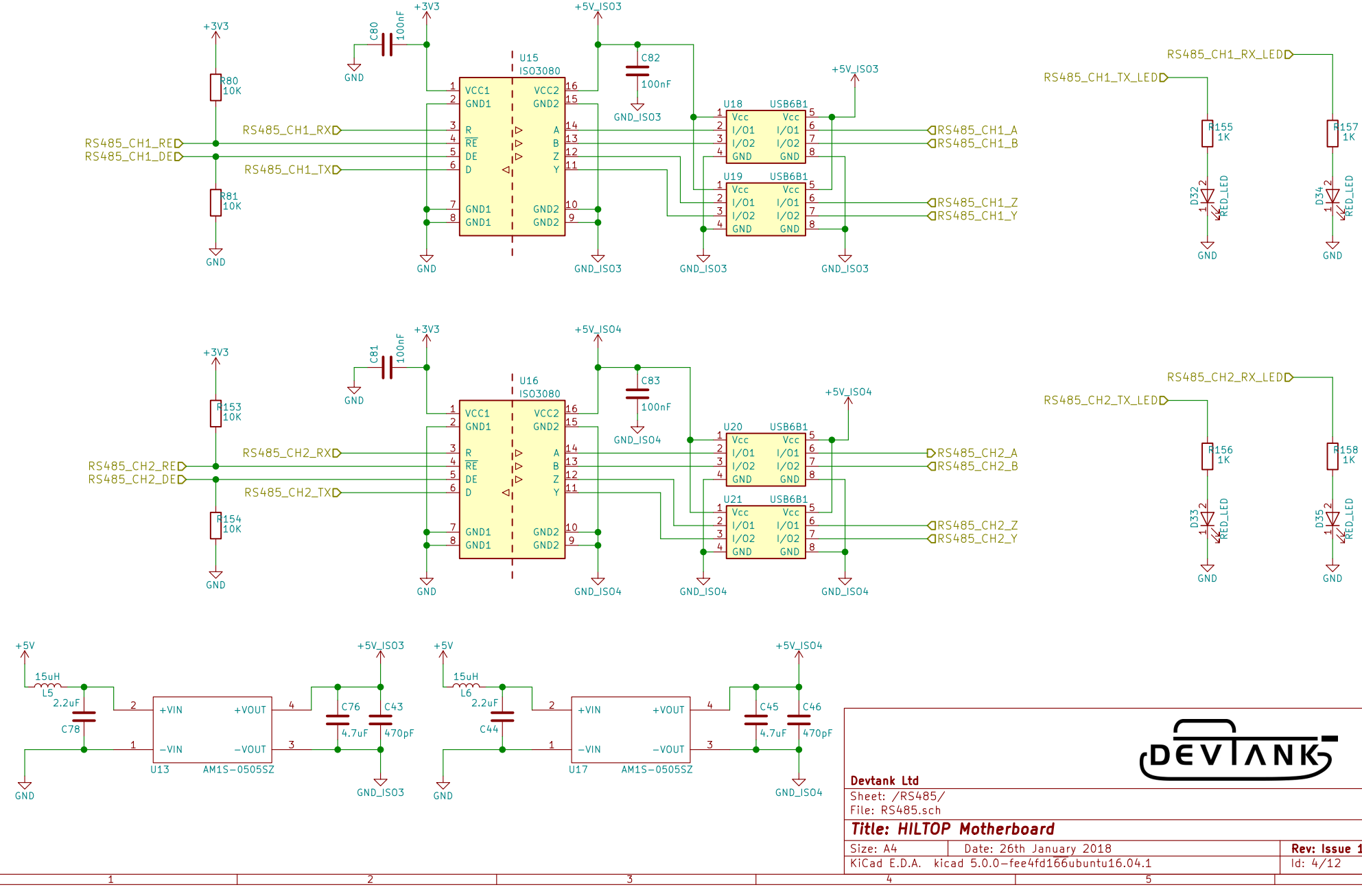

Devtank Ltd		
Sheet: /RS485/		
File: RS485.sch		
Title: HILTOP Motherboard		
Size: A4	Date: 26th January 2018	**Rev: Issue 1**
KiCad E.D.A. kicad 5.0.0−fee4fd166ubuntu16.04.1		Id: 4/12

J22A

SO-DIMM

1	GND	GND	2
3	CLK_LVDS+	REF_CLK_IN+	4
5	CLK_LVDS-	REF_CLK_IN-	6
7	GND	GND	8
9	DATA_MOSI_1_LVDS+	FPGA_GPIO_1	10
11	DATA_MOSI_1_LVDS-	FPGA_GPIO_2	12
13	GND	GND	14
15	DATA_MISO_1_LVD+	FPGA_GPIO_3	16
17	DATA_MISO_1_LVDS-	FPGA_GPIO_4	18
19	GND	GND	20
21	DATA_MOSI_2_LVDS+	FPGA_GPIO_5	22
23	DATA_MOSI_2_LVDS-	FPGA_GPIO_6	24
25	GND	GND	26
27	DATA_MISO_2_LVDS+	FPGA_GPIO_7	28
29	DATA_MISO_2_LVDS-	FPGA_GPIO_8	30
31	GND	GND	32
33	DATA_MOSI_3_LVDS+	FPGA_GPIO_9	34
35	DATA_MOSI_3_LVDS-	FPGA_GPIO_10	36
37	GND	GND	38
39	NC	FPGA_GPIO_11	40
41	NC	FPGA_GPIO_12	42
43	GND	GND	44
45	DATA_MISO_3_LVDS+	FPGA_GPIO_13	46
47	DATA_MISO_3_LVDS-	FPGA_GPIO_14	48
49	GND	GND	50
51	DATA_MOSI_4_LVDS+	FPGA_GPIO_15	52
53	DATA_MOSI_4_LVDS-	FPGA_GPIO_16	54
55	GND	GND	56
57	DATA_MISO_4_LVDS+	FPGA_GPIO_17	58
59	DATA_MISO_4_LVDS-	FPGA_GPIO_18	60
61	GND	GND	62
63	DATA_MOSI_5_LVDS+	FPGA_GPIO_19	64
65	DATA_MOSI_5_LVDS-	FPGA_GPIO_20	66
67	GND	GND	68
69	DATA_MISO_5_LVDS+	FPGA_GPIO_21	70
71	DATA_MISO_5_LVDS-	FPGA_GPIO_22	72
73	GND	GND	74
75	DATA_MOSI_6_LVDS+	FPGA_GPIO_23	76
77	DATA_MOSI_6_LVDS-	FPGA_GPIO_24	78
79	GND	GND	80
81	DATA_MISO_6_LVDS+	FPGA_GPIO_25	82
83	DATA_MISO_6_LVDS-	FPGA_GPIO_26	84
85	GND	GND	86
87	DATA_MOSI_7_LVDS+	FPGA_GPIO_27	88
89	DATA_MOSI_7_LVDS-	FPGA_GPIO_28	90
91	GND	GND	92
93	DATA_MISO_7_LVDS+	FPGA_GPIO_29	94
95	DATA_MISO_7_LVDS-	FPGA_GPIO_30	96
97	GND	GND	98
99	DATA_MOSI_8_LVDS+	FPGA_GPIO_31	100
101	DATA_MOSI_8_LVDS-	FPGA_GPIO_32	102
103	GND	GND	104
105	DATA_MISO_8_LVDS+	FPGA_GPIO_33	106
107	DATA_MISO_8_LVDS-	FPGA_GPIO_34	108
109	GND	GND	110
111	FPGA_GPIO_57	FPGA_GPIO_35	112
113	FPGA_GPIO_58	FPGA_GPIO_36	114
115	GND	GND	116
117	FPGA_GPIO_59	FPGA_GPIO_37	118
119	FPGA_GPIO_60	FPGA_GPIO_38	120
121	GND	GND	122
123	FPGA_GPIO_61	FPGA_GPIO_39	124
125	FPGA_GPIO_62	FPGA_GPIO_40	126
127	GND	GND	128
129	FPGA_GPIO_63	FPGA_GPIO_41	130
131	FPGA_GPIO_64	FPGA_GPIO_42	132
133	GND	GND	134
135	FPGA_GPIO_65	FPGA_GPIO_43	136
137	FPGA_GPIO_66	FPGA_GPIO_44	138
139	GND	GND	140
141	FPGA_GPIO_67	FPGA_GPIO_45	142
143	FPGA_GPIO_68	FPGA_GPIO_46	144
145	GND	GND	146
147	FPGA_GPIO_69	FPGA_GPIO_47	148
149	FPGA_GPIO_70	FPGA_GPIO_48	150
151	GND	GND	152
153	FPGA_GPIO_71	FPGA_GPIO_49	154
155	FPGA_GPIO_72	FPGA_GPIO_50	156
157	GND	GND	158
159	FPGA_GPIO_73	FPGA_GPIO_51	160
161	FPGA_GPIO_74	FPGA_GPIO_52	162
163	GND	GND	164
165	FPGA_GPIO_75	FPGA_GPIO_53	166
167	FPGA_GPIO_76	FPGA_GPIO_54	168
169	GND	GND	170
171	USB_DP	FPGA_GPIO_55	172
173	USB_GN	FPGA_GPIO_56	174
175	GND	GND	176
177	1V2_IN	1V2_IN	178
180	1V2_IN	1V2_IN	180
181	GND	GND	182
183	1V8_IN	1V8_IN	184
185	1V8_IN	1V8_IN	186
187	GND	GND	188
189	2V5_IN	2V5_IN	190
191	3V3_IN	3V3_IN	192
193	3V3_IN	3V3_IN	194
195	GND	GND	196
197	3V3_IN	3V3_IN	198
199	3V3_IN	3V3_IN	200

DEVTANK

Devtank Ltd

Sheet: /ice40_FPGA/
File: ice40_FPGA.sch

Title: HILTOP Motherboard

Size: A3	Date: 26th January 2018	**Rev: Issue 1**
KiCad E.D.A. kicad 5.0.0-fee4fd166ubuntu16.04.1		Id: 5/12

Real Time Clock

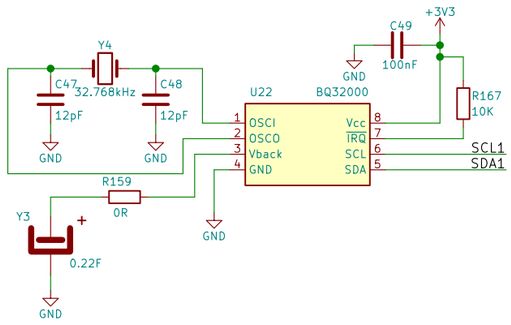

I/O Protection

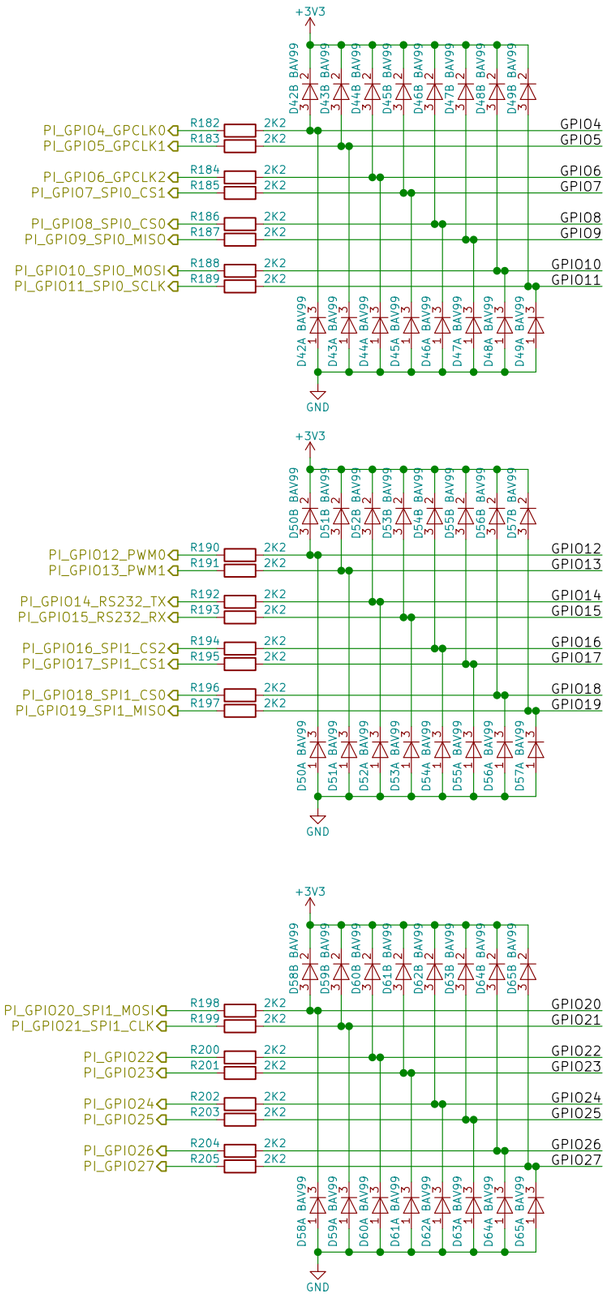

Raspberry Pi 3 Compute Module SO-DIMM

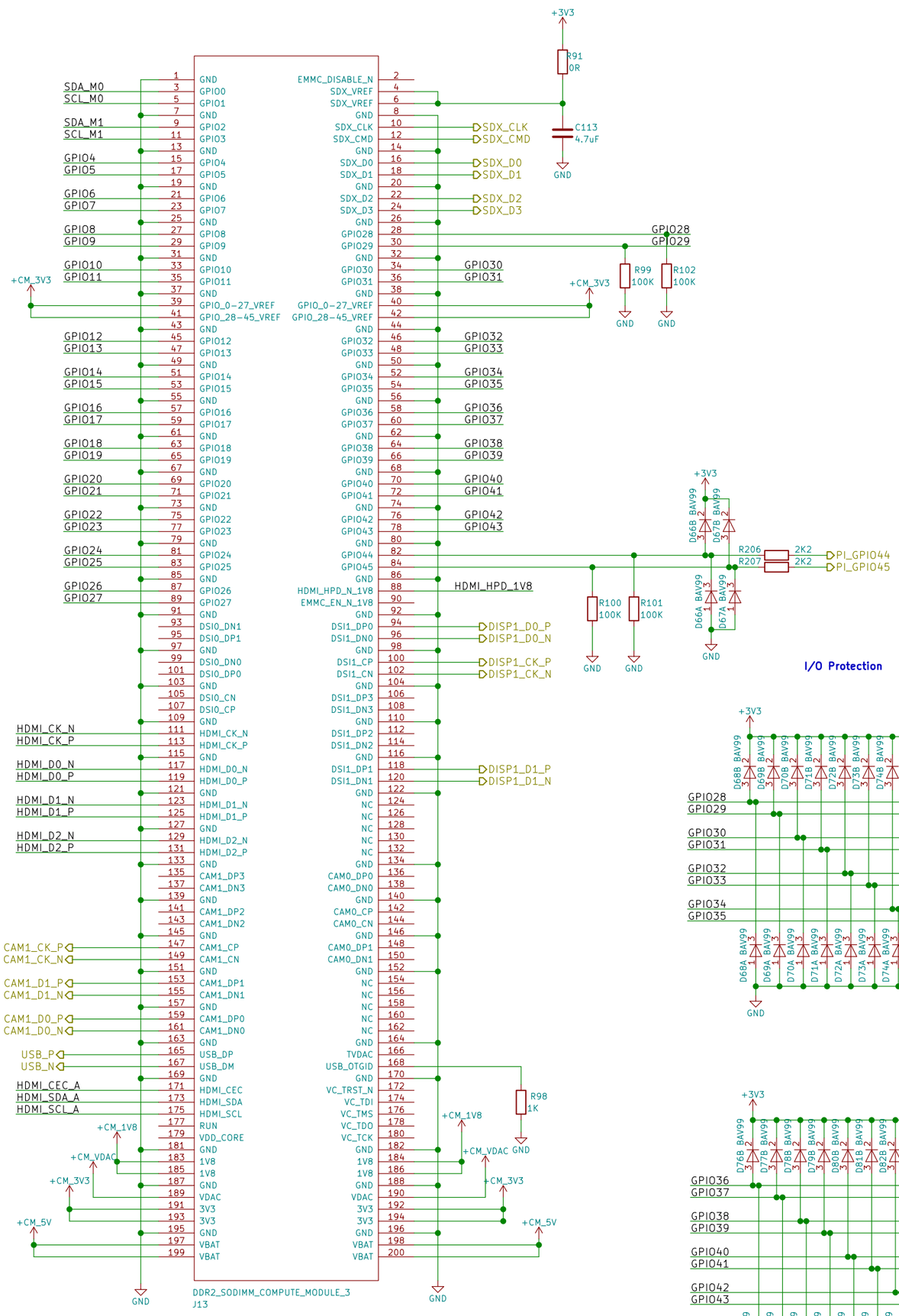

*USB Signals to be tracked as matched length 90R differential pairs

*HDMI Signals to be tracked as matched length 100R differential pairs

Onboard Temperature Monitor

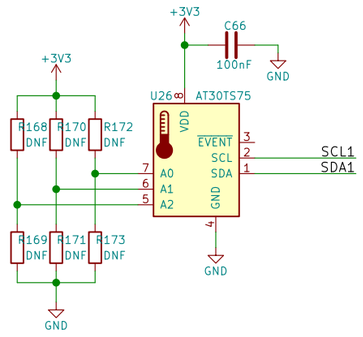

I/O Protection

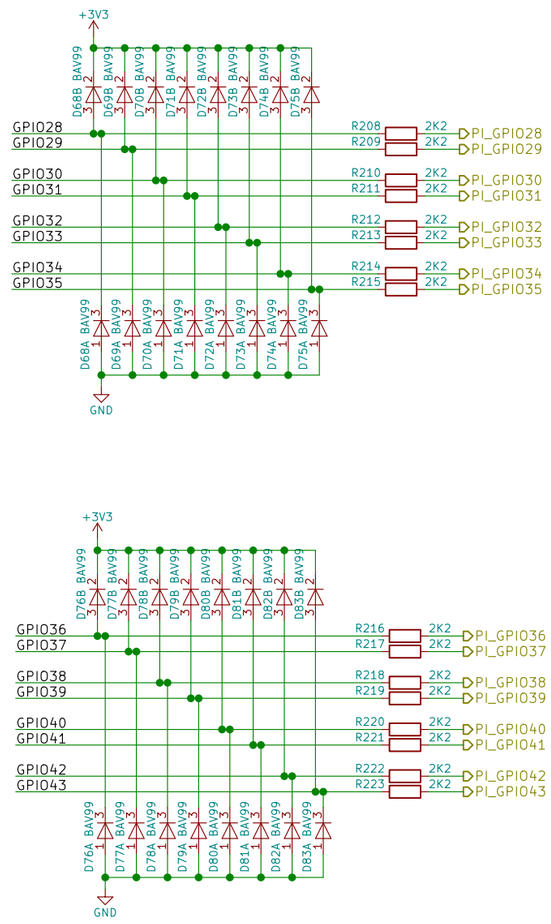

I/O Protection

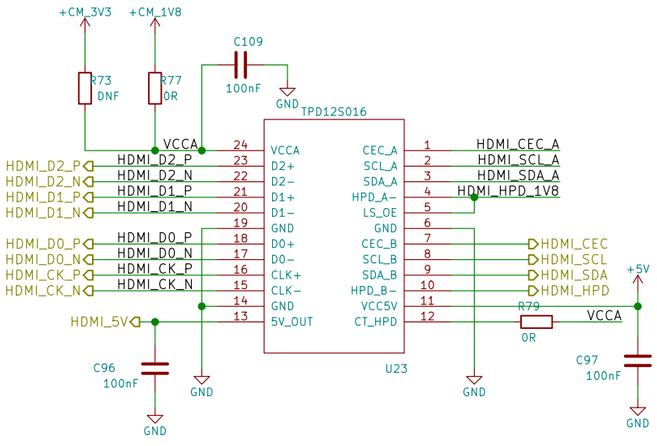

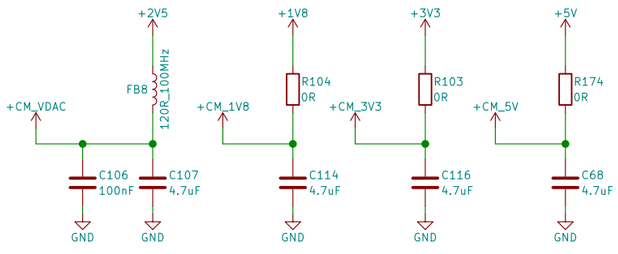

Devtank Ltd		
Sheet: /Processor/		
File: Processor.sch		
Title: HILTOP Motherboard		
Size: A2	Date: 26th January 2018	**Rev: Issue 1**
KiCad E.D.A. kicad 5.0.0-fee4fd166ubuntu16.04.1		Id: 6/12

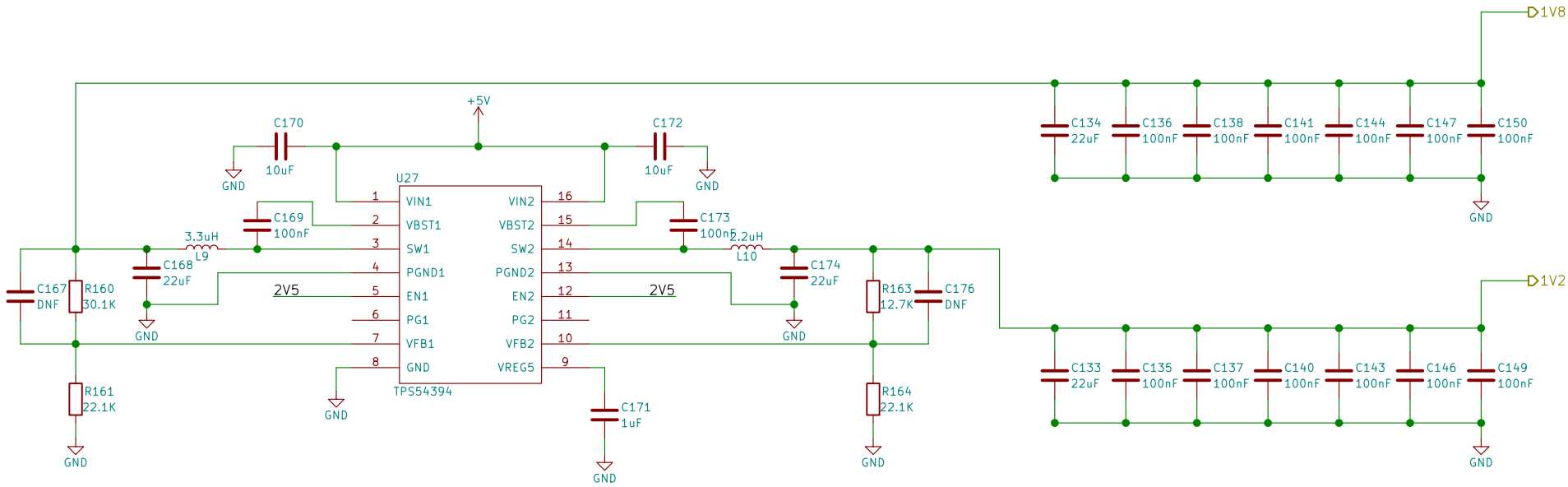

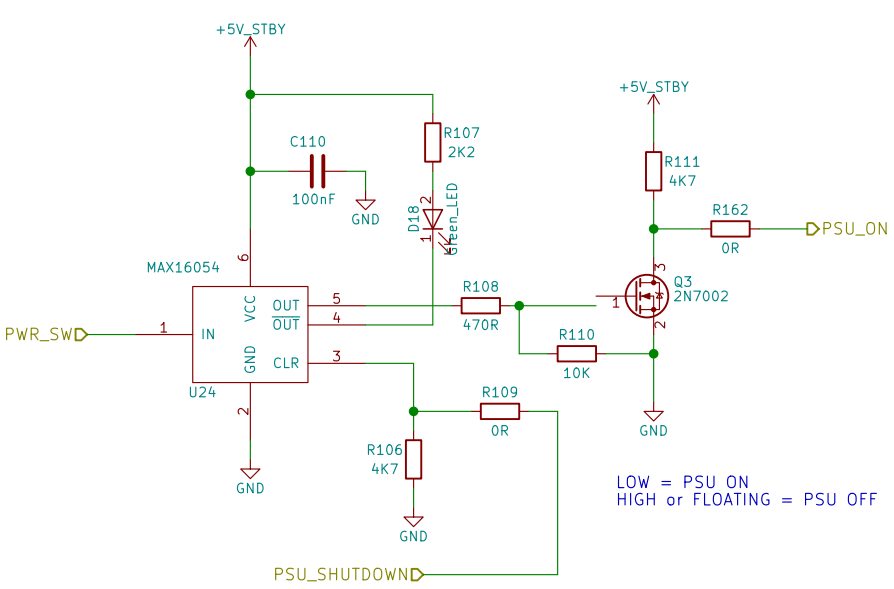

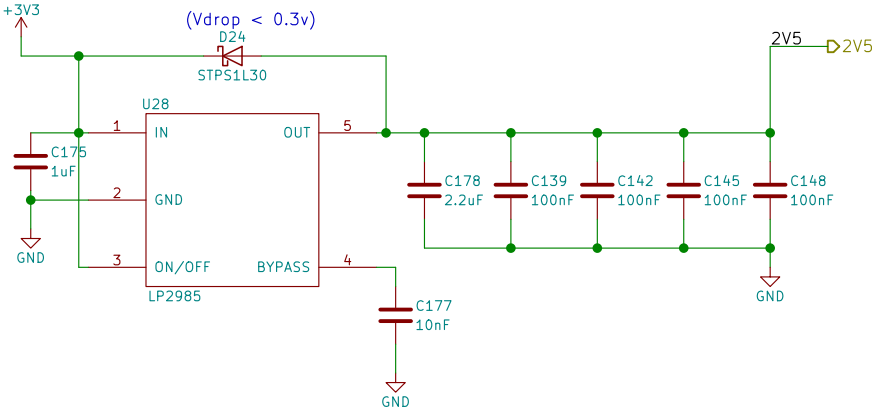

Devtank Ltd

Sheet: /BoardPower/
File: BoardPower.sch

Title: HILTOP Motherboard

Size: A4	Date: 26th January 2018	**Rev: Issue 1**
KiCad E.D.A. kicad 5.0.0-fee4fd166ubuntu16.04.1		Id: 7/12

+12V
C56 2.2uF
C58 2.2uF
C179 2.2uF
GND
R63 0R
+3V3
R57 75K
C57 100n
R60 DNF
DC_DC_ENABLE
LM5118
VIN
UVLO
RT
EN
RAMP
AGND
SS
FB
COMP
VOUT
HS
HO
HB
VCCX
VCC
LO
PGND
CSG
CS
SYNC
PAD
U8
21
C117 100n
R58 30K
R59 18K
C54 330pF
C118 100n
R61 10K
C60 100nF
C180 100n
R65 10K
R66 0R
DNF C61
R62 820R
C111 1uF
Q1 Q_NMOS_DS_POWERPAK
TP2
C64 100nF
L4 10uH
TP1
C63 1uF
R67 0R
HBRD1035 D6
Q2 Q_NMOS_DS_POWERPAK
TP W1
D3 VB40100C
C62 DNF
R68 0R
R69 0.015
C65 4.7uF
C181 4.7uF
C182 4.7uF
C183 4.7uF
C67 100uF
C186 100uF
C70 100uF
C79 100uF
C69 470nF
PWR_ENABLE
R114 470R
R116 10K
Q4 2N7002
VADJ_DC
TP3
RL1 SPST-NO
D20 STPS1L30
U9 INA250A3
R74 47K
R76 330R
R166 330R
R75 3K3
R142 0R
R143 DNF
C187 100n
C115 1uF
C19 100n
C192 100n
TP4
TP6
TP5
TP7
PSU_DAC_ADDR
PSU_SDA
PSU_SCL
PSU_ADC_ADDR
PSU_ALERT_RDY
D8 BAV99
D10 BAV99
C194 100nF
U11 ADS1015
AIN0
AIN1
AIN2
AIN3
VDD
ALERT/RDY
ADDR
SCL
SDA
R123 DNF
AIN0: Vin = VRET / 6.732 e.g. 30V = 4.456V
AIN1: Vin = 0 – 5V = 0 to 2.5A sensed current
D7 BAV99
D9 BAV99
C193 100nF
R133 330R
R165 330R
VMON_1
VMON_2
C188 100n
C189 100n
U12 MCP4725
R118 DNF
DAC OUT = 0 – 2.5V = RET DC output of 0 – 30V
VADJ_GND
+5V
R115 2K
D19 LM4040
R113 10K
R112 3.16K
C184 100nF
U10 TLC271
R64 51R
R132 10K
R117 47R
C190 100n
C185 100nF
−5V
R105 10K
C112 DNF

Devtank Ltd
Sheet: /AdjPower/
File: AdjPower.sch
Title: HILTOP Motherboard
Size: A3 | Date: 26th January 2018 | Rev: Issue 1
KiCad E.D.A. kicad 5.0.0-fee4fd166ubuntu16.04.1 | Id: 8/12

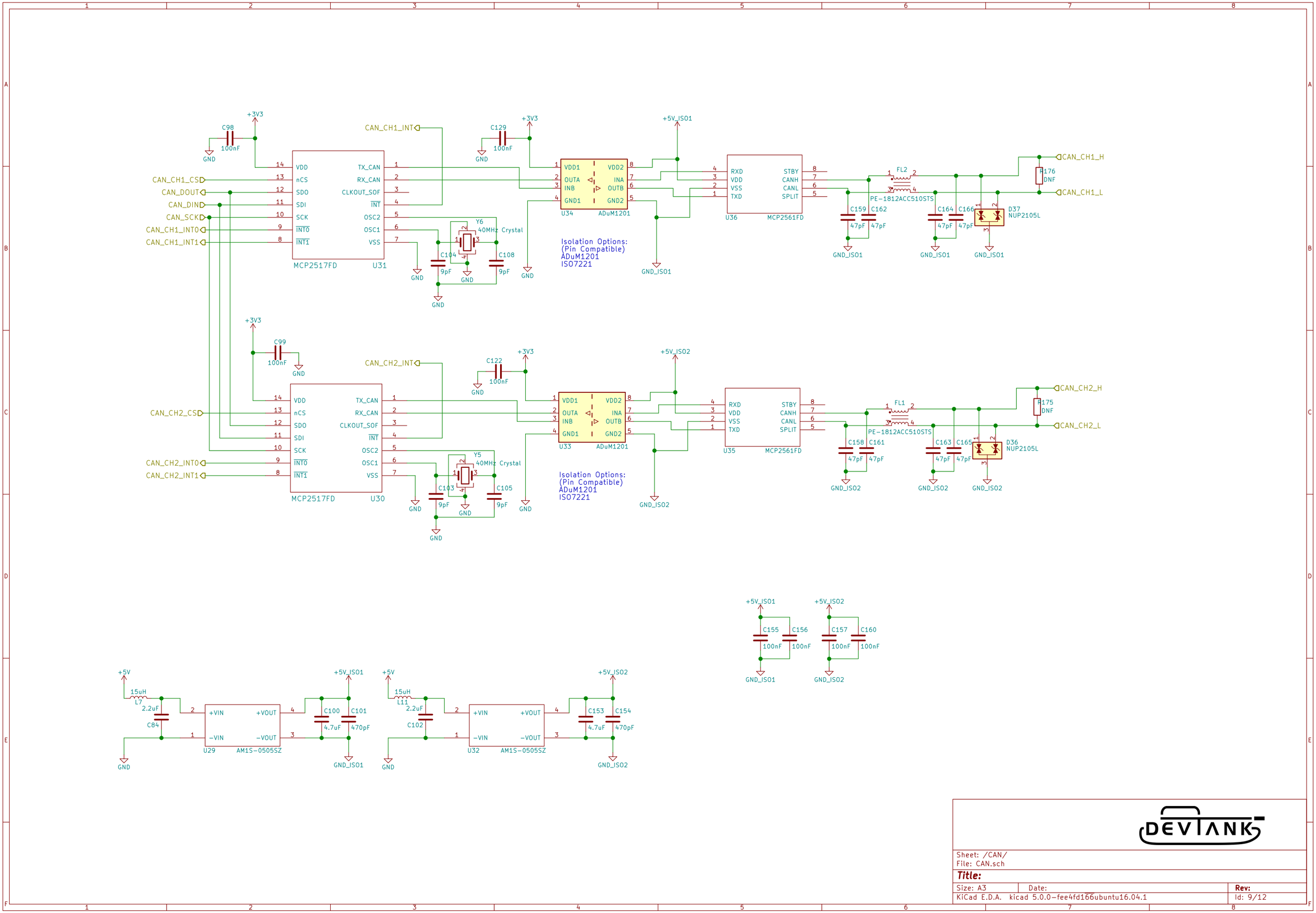

CAN_CH1_CS
CAN_DOUT
CAN_DIN
CAN_SCK
CAN_CH1_INT0
CAN_CH1_INT1
CAN_CH1_INT
MCP2517FD
U31
Y6
40MHz Crystal
C104
9pF
C108
9pF
C98
100nF
C129
100nF
+3V3
GND
U34
ADuM1201
Isolation Options:
(Pin Compatible)
ADuM1201
ISO7221
+5V_ISO1
GND_ISO1
U36
MCP2561FD
FL2
PE-1812ACC510STS
C159
C162
47pF
C164
C166
D37
NUP2105L
R176
DNF
CAN_CH1_H
CAN_CH1_L
CAN_CH2_CS
CAN_CH2_INT0
CAN_CH2_INT1
CAN_CH2_INT
MCP2517FD
U30
Y5
40MHz Crystal
C103
9pF
C105
9pF
C99
100nF
C122
100nF
U33
ADuM1201
Isolation Options:
(Pin Compatible)
ADuM1201
ISO7221
+5V_ISO2
GND_ISO2
U35
MCP2561FD
FL1
PE-1812ACC510STS
C158
C161
C163
C165
D36
NUP2105L
R175
DNF
CAN_CH2_H
CAN_CH2_L
C155
C156
C157
C160
100nF
+5V
15uH
L7
2.2uF
C84
U29
AM1S-0505SZ
C100
4.7uF
C101
470pF
L11
C102
U32
AM1S-0505SZ
C153
C154
DEVTANK
Sheet: /CAN/
File: CAN.sch
Title:
Size: A3
Date:
Rev:
KiCad E.D.A. kicad 5.0.0-fee4fd166ubuntu16.04.1
Id: 9/12

Match Tracks to 2.5 Mils
100Ohms Differential Impedance
50Ohms Single-ended Impedance

+1V1_SATA
+3V3_SATA_D
+3V3_SATA_A

CAP_SATATXM — C197 10nF
CAP_SATATXP — C198 10nF
CAP_SATARXM — C199 10nF
CAP_SATARXP — C200 10nF

U37 TUSB9261

SATA_TXM
SATA_TXP
SATA_RXM
SATA_RXP
GPIO0 … GPIO7
UART_RX_GPIO8
UART_TX_GPIO9
SPI_CS1_GPIO10
SPI_CS2_GPIO11
PWM0
PWM1
XI
XO
VSSOSC
FREQSEL0
FREQSEL1
GRSTZ
USB_R1 — R228 10K
USB_R1RTN
JTAG_TRSTZ — R229 DNF
JTAG_TMS
JTAG_TDO
JTAG_TDI
JTAG_TCK
SPI_SCLK
SPI_DATA_OUT
SPI_DATA_IN
SPI_CS0
USB_VBUS — R234 90.9K — +5V
USB_DM — SATA_USB_N
USB_DP — SATA_USB_P
USB_SSTXM
USB_SSTXP
USB_SSRXM
USB_SSRXP
NC1 NC2 NC3 NC4
VSS

J25 DEBUG

Y7 40MHz Crystal — C204 9pF — C206 9pF — R177 DNF

R224 4K7
R225 DNF
R226 4K7
R227 DNF

R230 4K7 — R231 4K7 — +3V3

U38 AT25DN512CSSHF-B — C208 100nF — R232 0R

R233 10K

GPIO_0 … GPIO_7 — D85 … D92 GRN — R235 … R242 330R

+1V1_SATA — 120R_100MHz FB9 — D84 D — +1V2

C195 1uF — C196 22uF — C201 … C214 100nF

+3V3 — +3V3_SATA_D — 120R_100MHz FB7 — C215 C216 C218 C220 100nF — C221 22uF

+3V3_SATA_A — +3V3 — 120R_100MHz FB11 — C222 22uF — C223 100nF

GND

DEVTANK

Sheet: /SATA_Bridge/		
File: SATA_Bridge.sch		
Title:		
Size: A3	Date:	**Rev:**
KiCad E.D.A. kicad 5.0.0-fee4fd166ubuntu16.04.1		Id: 10/12

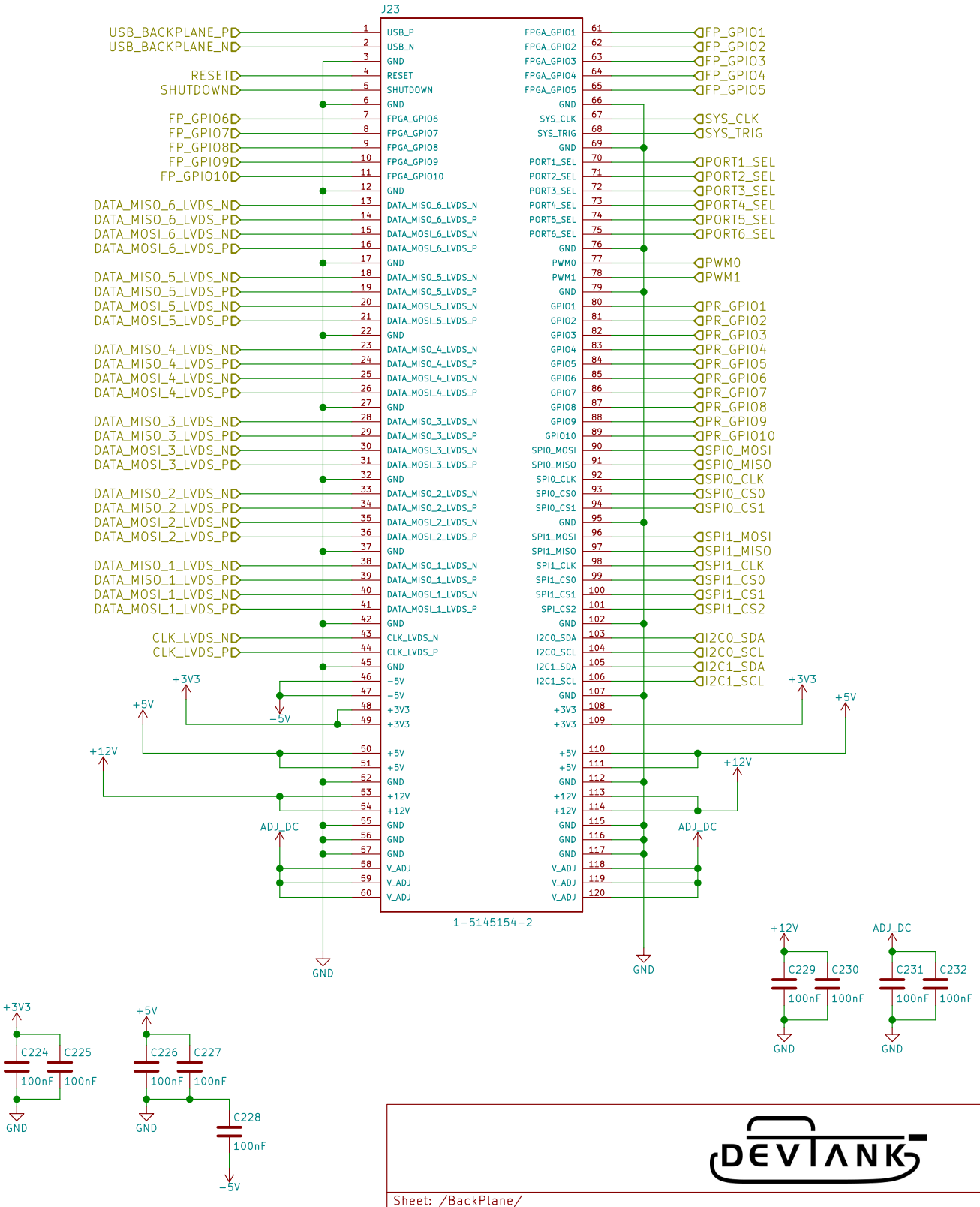

Sheet: /BackPlane/		
File: BackPlane.sch		
Title:		
Size: A4	Date:	**Rev:**
KiCad E.D.A. kicad 5.0.0-fee4fd166ubuntu16.04.1		Id: 11/12

RS232_RX

RS232_TX

USB_P

USB_N

Sheet: /USB_Debug/
File: USB_Debug.sch

Title:

Size: A4	Date:	**Rev:**
KiCad E.D.A. kicad 5.0.0-fee4fd166ubuntu16.04.1		Id: 12/12