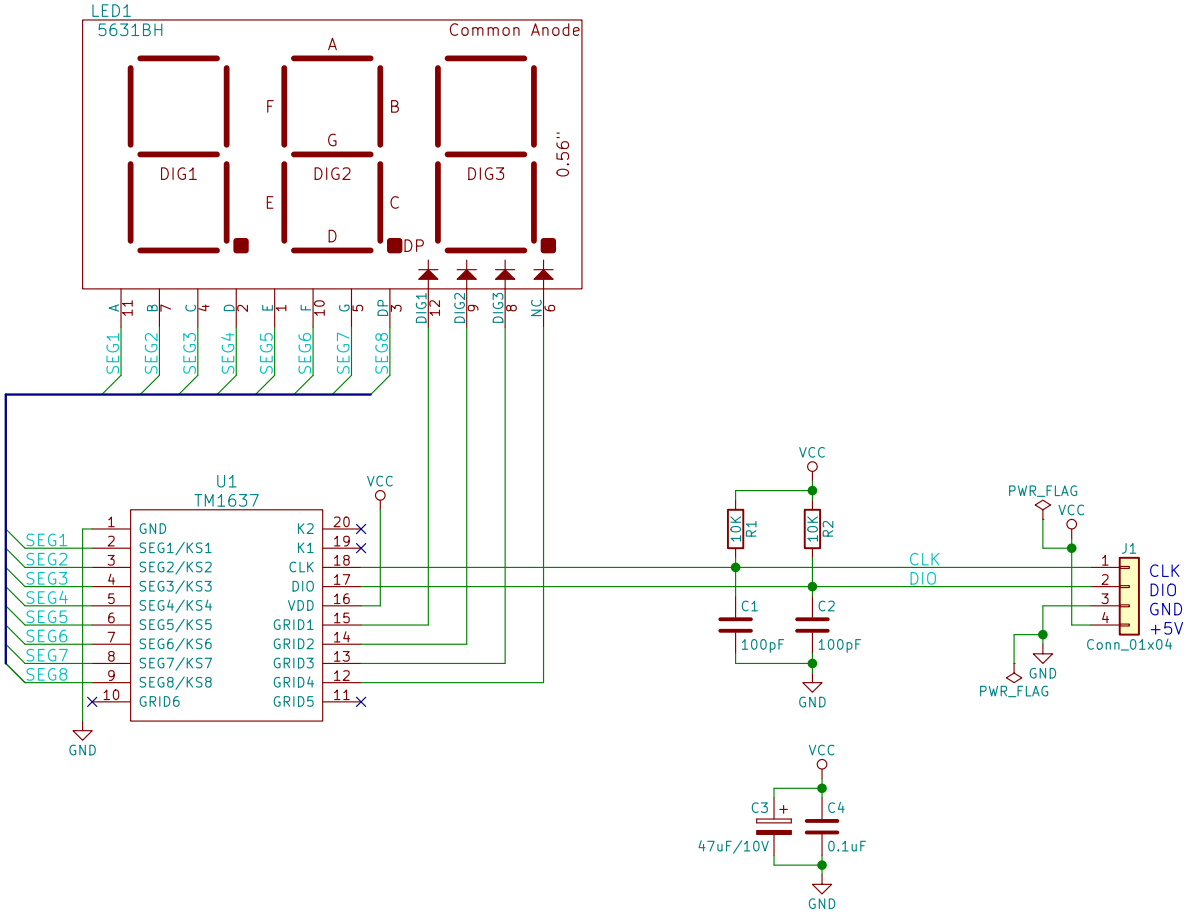

Dewtronics/Donna Whisnant

Sheet: /

File: LED5631B_TM1637.sch

Title: 3-Digit Seven-Segment LED TM1637 Display

Size: A4	Date: 27 Apr 2019	**Rev: 1.0**
KiCad E.D.A. kicad 4.0.7-e2-637658ubuntu14.04.1		Id: 1/1