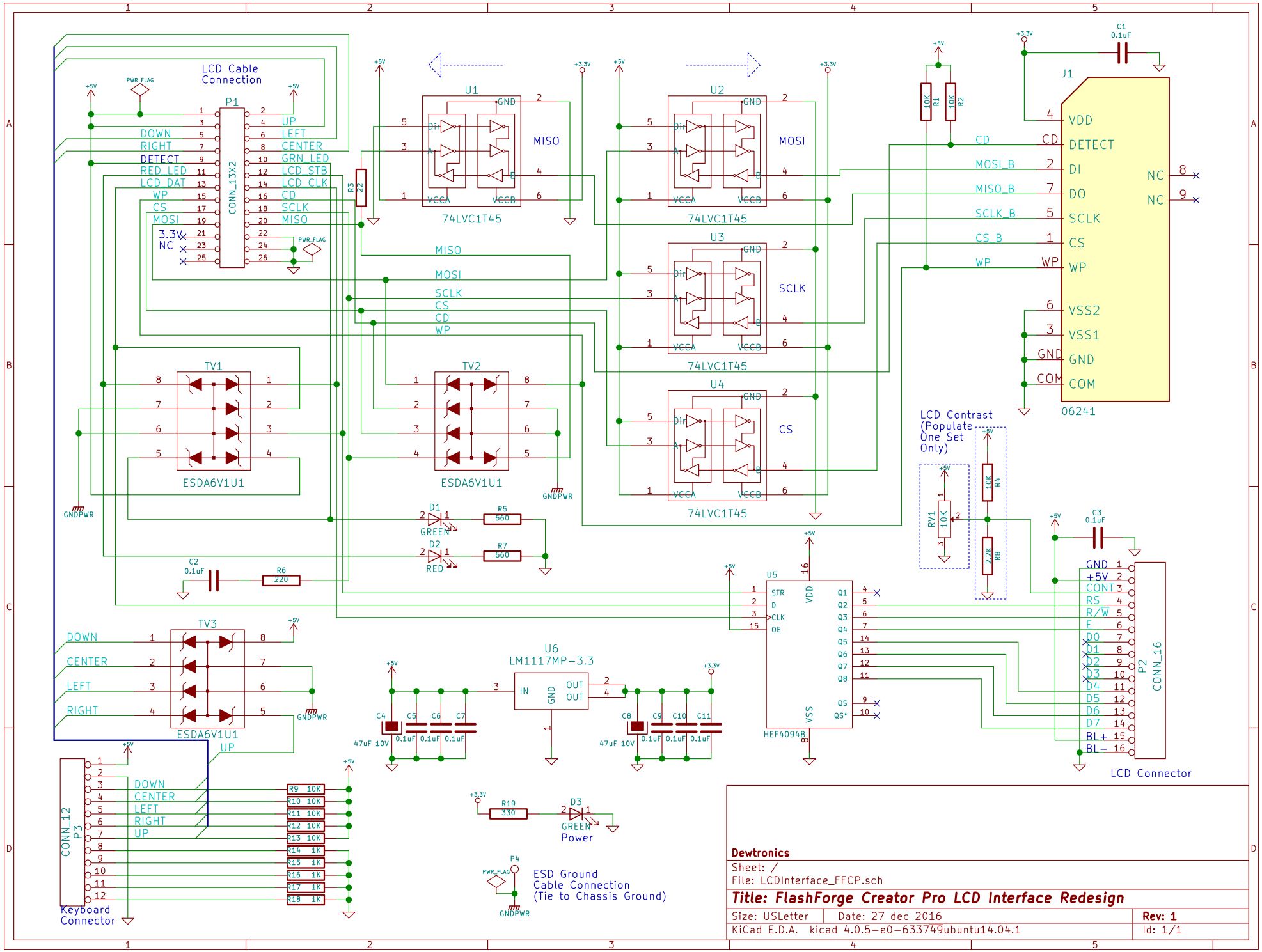
LCD Cable Connection
P1
CONN_13X2
DOWN
RIGHT
DETECT
RED_LED
LCD_DAT
WP
CS
MOSI
3.3V
NC
UP
LEFT
CENTER
GRN_LED
LCD_STB
LCD_CLK
CD
SCLK
MISO
PWR_FLAG
U1
U2
U3
U4
74LVC1T45
MISO
MOSI
SCLK
CS
CD
WP
R3 22
TV1
TV2
TV3
ESDA6V1U1
GNDPWR
D1 GREEN
D2 RED
R5 560
R7 560
R6 220
C2 0.1uF
R1 10K
R2 10K
J1
06241
VDD
DETECT
DI
DO
SCLK
CS
WP
VSS2
VSS1
GND
COM
NC
C1 0.1uF
MOSI_B
MISO_B
SCLK_B
CS_B
LCD Contrast (Populate One Set Only)
RV1 10K
R4 10K
R8 2.2K
C3 0.1uF
U5
HEF4094B
STR
D
CLK
OE
VDD
VSS
Q1
Q2
Q3
Q4
Q5
Q6
Q7
Q8
QS
QS*
P2
CONN_16
GND
+5V
CONT
RS
R/W
E
D0
D1
D2
D3
D4
D5
D6
D7
BL+
BL−
LCD Connector
U6
LM1117MP-3.3
IN
OUT
C4 47uF 10V
C5 0.1uF
C6 0.1uF
C7 0.1uF
C8 47uF 10V
C9 0.1uF
C10 0.1uF
C11 0.1uF
P3
CONN_12
Keyboard Connector
R9 10K
R10 10K
R11 10K
R12 10K
R13 10K
R14 1K
R15 1K
R16 1K
R17 1K
R18 1K
R19 330
D3 GREEN
Power
P4
ESD Ground Cable Connection (Tie to Chassis Ground)
Dewtronics
Sheet: /
File: LCDInterface_FFCP.sch
Title: FlashForge Creator Pro LCD Interface Redesign
Size: USLetter
Date: 27 dec 2016
Rev: 1
KiCad E.D.A. kicad 4.0.5-e0-633749ubuntu14.04.1
Id: 1/1