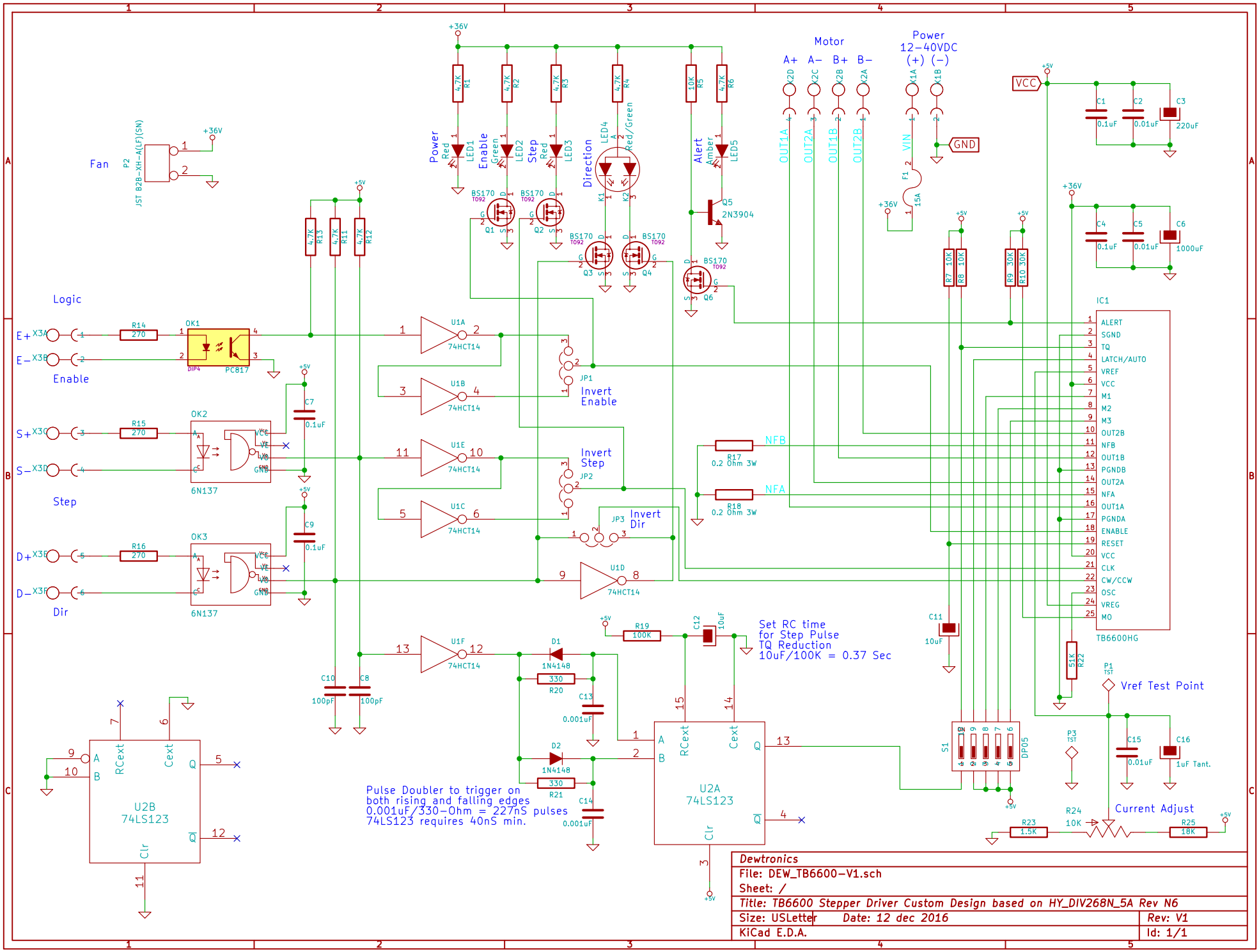

Dewtronics	
File: DEW_TB6600-V1.sch	
Sheet: /	
Title: TB6600 Stepper Driver Custom Design based on HY_DIV268N_5A Rev N6	
Size: USLetter Date: 12 dec 2016	Rev: V1
KiCad E.D.A.	Id: 1/1