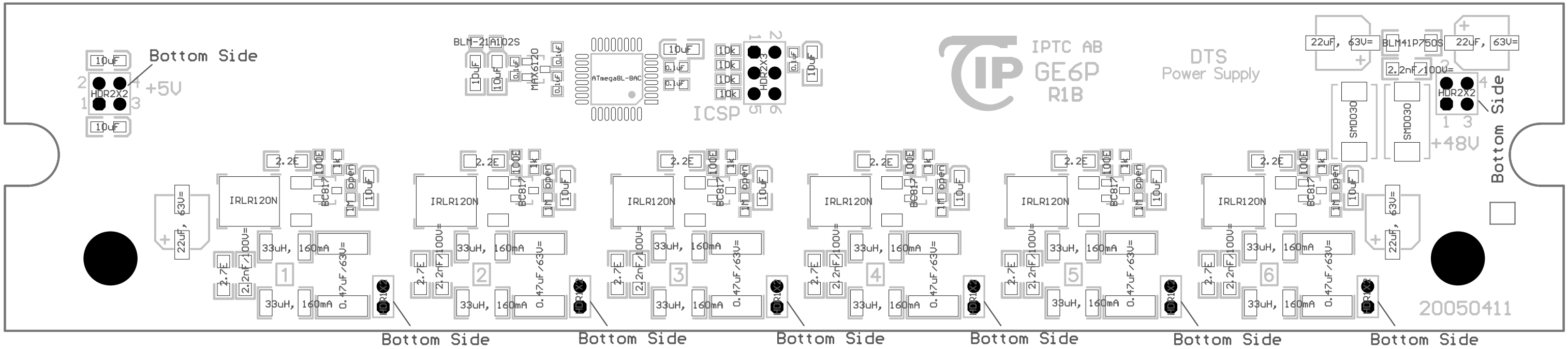
Bottom Side
10uF
HDR2X2
+5V
BLM-21A102S
MAX6120
ATmega8L-8AC
ICSP
HDR2X3
IPTC AB
GE6P
R1B
DTS
Power Supply
22uF, 63V=
BLM41P750S
2.2nF/100V=
SMD030
+48V
IRLR120N
BC817
33uH, 160mA
0.47uF/63V=
2.7E
2.2E
20050411