I/O EXPANSION

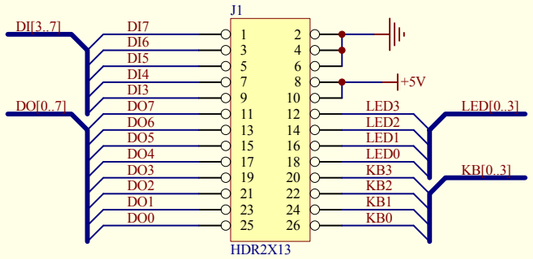

STATUS LED

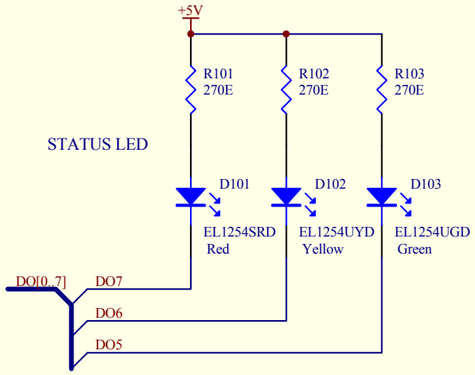

KEYBOARD

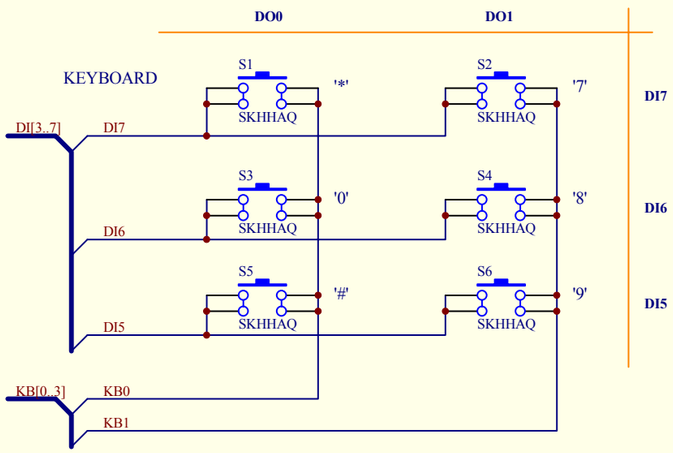

BACKLIGHT

P tot = 6 x 5 x (5V - 1.9V) / 560E x 5V = 30 x 5.53mA x 5V = 167mA x 5V = 0.835W

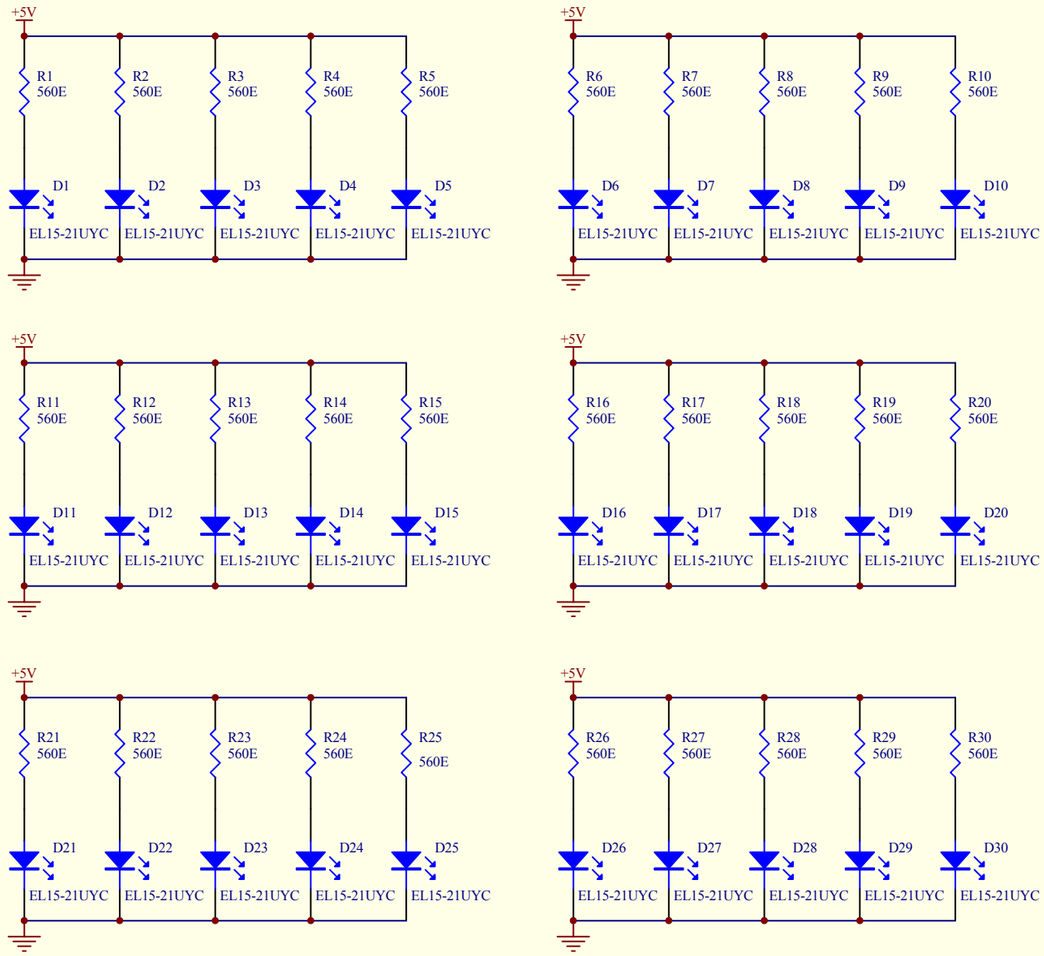

Keymap

```
Axema:
S1   PRG 0x12 (18)      DI7  DO0  '*'
S2   PRG 0x13 (19)      DI7  DO1  '7'
S3   PRG 0x14 (20)      DI6  DO0  '0'
S4   PRG 0x15 (21)      DI6  DO1  '8'
S5   PRG 0x16 (22)      DI5  DO0  '#'
S6   FIX 0x0D (clear)   DI5  DO1  '9'

Riksdagen:
K1   PRG 0x01 (1)       DI4  DO2  'B'
K2   PRG 0x17 (23)      DI4  DO1  'C'
```

+5V Filtering Capacitors

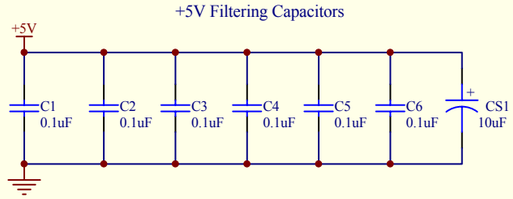

Title *DDTS Mona - Keyboard*			*IPTC Tech. Comm. AB* *Pyramidbacken 6* *141 75 Kungens Kurva* *Sweden*
Size: A3	Number:	Revision: A	
Date: 3-Feb-2006	Time: 17:09:54	Sheet 1 of 1	
File: D:\WORK\Albatros 2\09. DDTS Mona\DDTS Mona - Keyboard.ddb - Documents\Mona-KBD.Sch			