Silicon Photomultipliers (SiPM), Low-Noise, Blue-Sensitive

C-Series SiPM Sensors

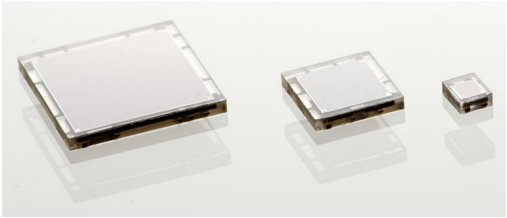

Figure 1. C−Series Sensors

ORDERING INFORMATION

See detailed ordering and shipping information on page 14 of this data sheet.

The C−Series low-light sensors from **onsemi** feature an industry-leading low dark-count rate combined with a high PDE. For ultrafast timing applications, C−Series sensors have a fast output that can have a rise time of 300 ps and a pulse width of 600 ps. The C−Series is available in different sensor sizes (1 mm, 3 mm and 6 mm) and packaged in a 4-side tileable surface mount (SMT) package that is compatible with industry standard, lead-free, reflow soldering processes.

The C−Series Silicon Photomultipliers (SiPM) form a range of high gain, single-photon sensitive, UV-to-visible light sensors. They have performance characteristics similar to a conventional PMT, while benefiting from the practical advantages of solid-state technology: low operating voltage, excellent temperature stability, robustness, compactness, output uniformity, and low cost. For advice on the usage of these sensors please refer to the Biasing and Readout Application Note.

Table 1. PERFORMANCE PARAMETERS

Sensor Size	Microcell Size	Parameter (Note 1)	Overvoltage	Min.	Typ.	Max.	Units
1 mm	10μ, 20μ, 35μ	Breakdown Voltage (Vbr) (Note 3)		24.2		24.7	V
3 mm	20μ, 35μ, 50μ						
6 mm	35μ						
1 mm	10μ, 20μ, 35μ	Recommended overvoltage Range (Voltage above Vbr) (Note 2)		1.0		5.0	V
3 mm	20μ, 35μ, 50μ						
6 mm	35μ						
1 mm	10μ, 20μ, 35μ	Spectral Range (Note 4)		300		950	nm
3 mm	20μ, 35μ, 50μ						
6 mm	35μ						
1 mm	10μ, 20μ, 35μ	Peak Wavelength (λp)			420		nm
3 mm	20μ, 35μ, 50μ						
6 mm	35μ						

© Semiconductor Components Industries, LLC, 2014

Table 1. PERFORMANCE PARAMETERS (continued)

Sensor Size	Microcell Size	Parameter (Note 1)	Overvoltage	Min.	Typ.	Max.	Units
1 mm	10μ	PDE (Note 5) at λp	Vbr + 2.5 V		14		%
	20μ				24		%
	35μ				31		%
1 mm	10μ		Vbr + 5.0 V		18		%
	20μ				31		%
	35μ				41		%
3 mm	20μ		Vbr + 2.5 V		24		%
	35μ				31		%
	50μ				35		%
3 mm	20μ		Vbr + 5.0 V		31		%
	35μ				41		%
	50μ				47		%
6 mm	35μ		Vbr + 2.5 V		31		%
6 mm	35μ		Vbr + 5.0 V		41		%
1 mm	10μ	Gain (anode to cathode readout)	Vbr + 2.5 V		2×10^5		
	20μ				1×10^6		
	35μ				3×10^6		
3 mm	20μ				1×10^6		
	35μ				3×10^6		
	50μ				6×10^6		
6 mm	35μ				3×10^6		
1 mm	10μ	Dark Current (Note 6)	Vbr + 2.5 V		1	3	nA
	20μ				5	16	nA
	35μ				15	49	nA
3 mm	20μ				50	142	nA
	35μ				154	443	nA
	50μ				319	914	nA
6 mm	35μ				618	1750	nA

Share Feedback
Your Opinion Matters

Table 1. PERFORMANCE PARAMETERS (continued)

Sensor Size	Microcell Size	Parameter (Note 1)	Overvoltage	Min.	Typ.	Max.	Units
1 mm	10μ	Dark Count Rate	Vbr + 2.5 V		30	96	kHz
	20μ				30	96	kHz
	35μ				30	96	kHz
3 mm	20μ				300	860	kHz
	35μ				300	860	kHz
	50μ				300	860	kHz
6 mm	35μ				1200	3400	kHz
1 mm	10μ, 20μ, 35μ	Rise Time − Fast Output (Note 7)			0.3		ns
3 mm	20μ, 35μ, 50μ				0.6		ns
6 mm	35μ				1.0		ns
1 mm	10μ, 20μ, 35μ	Signal Pulse Width − Fast Output (FWHM)			0.6		ns
3 mm	20μ, 35μ, 50μ				1.5		ns
6 mm	35μ				3.2		ns
1 mm	10μ	Microcell recharge time constant (Note 8)			5		ns
	20μ				23		ns
	35μ				82		ns
3 mm	20μ				23		ns
	35μ				82		ns
	50μ				159		ns
6 mm	35μ				95		ns
1 mm	10μ	Capacitance (Note 9) (anode−cathode)	Vbr + 2.5 V		50		pF
	20μ				90		pF
	35μ				100		pF
3 mm	20μ				770		pF
	35μ				850		pF
	50μ				920		pF
6 mm	35μ				3400		pF
1 mm	10μ	Capacitance (Note 9) (fast terminal to cathode)	Vbr + 2.5 V		1		pF
	20μ				1		pF
	35μ				1		pF

Share Feedback
Your Opinion Matters

Table 1. PERFORMANCE PARAMETERS (continued)

Sensor Size	Microcell Size	Parameter (Note 1)	Overvoltage	Min.	Typ.	Max.	Units
3 mm	20μ	Capacitance (Note 9) (fast terminal to cathode)	Vbr + 2.5 V		20		pF
	35μ				12		pF
	50μ				7		pF
6 mm	35μ				48		pF
1 mm	10μ, 20μ, 35μ	Temperature dependence of Vbr			21.5		mV/°C
3 mm	20μ, 35μ, 50μ						
6 mm	35μ						
1 mm	10μ, 20μ, 35μ	Temperature dependence of Gain (Note 10)			−0.8		%/°C
3 mm	20μ, 35μ, 50μ						
6 mm	35μ						
1 mm	10μ	Crosstalk	Vbr + 2.5 V		0.6		%
	20μ				3		%
	35μ				7		%
3 mm	20μ				3		%
	35μ				7		%
	50μ				10		%
6 mm	35μ				7		%
1 mm	10μ	Afterpulsing	Vbr + 2.5 V		0.2		%
	20μ				0.2		%
	35μ				0.2		%
3 mm	20μ				0.2		%
	35μ				0.2		%
	50μ				0.6		%
6 mm	35μ				0.2		%

1. All measurements made at 2.5 V overvoltage and 21°C unless otherwise stated.
2. Please consult the maximum current levels on page 6 when selecting the overvoltage to apply.
3. The breakdown voltage (Vbr) is defined as the value of the voltage intercept of a straight line fit to a plot of $\sqrt{I}$ vs V, where I is the current and V is the bias voltage.
4. The range where PDE > 1% at Vbr + 5.0 V.
5. Note that the PDE does not contain contributions from afterpulsing or crosstalk.
6. Dark current derived from dark count data as $DC \times M \times q \times (1 + CT)$, where DC is dark count, M is gain, q is the charge of an electron, and CT is cross talk.
7. Measured as time to go from 10% to 90% of the peak amplitude.
8. RC charging time constant of the microcell (τ)
9. Internal capacitance of the sensor. Typically add 2−3 pF for sensor in package. Listed by unique microcell size for each part version.
10. Quoted as the percentage change per degree C from the measured value at 21°C.

Share Feedback
Your Opinion Matters

GENERAL PARAMETERS

Table 2. GENERAL PARAMETERS

	1 mm	3 mm	6 mm
	10010, 10020, 10035	**30020, 30035, 30050**	**60035**
Active area	1×1 mm^2	3×3 mm^2	6×6 mm^2
No. of microcells	10010: 2880 10020: 1296 10035: 504	30020: 10998 30035: 4774 30050: 2668	60035: 18980
Microcell fill factor	10010: 28% 10020: 48% 10035: 64%	30020: 48% 30035: 64% 30050: 72%	60035: 64%

Table 3. PACKAGE PARAMETERS

	1 mm	3 mm	6 mm
	10010, 10020, 10035	**30020, 30035, 30050**	**60035**
Package dimensions	1.5×1.8 mm^2	4×4 mm^2	7×7 mm^2
Recommended operating temperature range	−40°C to +85°C		
Maximum storage temperature	+105°C		
Soldering conditions	Lead−free, reflow soldering process compatible (MSL 3 for tape & reel quantities; MSL 4 for tape only qty.) See the SMT Handling Tech Note for more details.		
Encapsulant type	Clear transfer molding compound		
Encapsulant refractive Index	1.59 @ 420 nm		

Table 4. MAXIMUM CURRENT LEVELS FOR EACH SENSOR SIZE

1 mm	3 mm	6 mm
10010, 10020, 10035	**30020, 30035, 30050**	**60035**
6 mA	15 mA	20 mA

Share Feedback
Your Opinion Matters

CIRCUIT SCHEMATICS

An SiPM is formed of a large number (hundreds or thousands) of microcells. Each microcell is an avalanche photodiode with its own quench resistor and a capacitively coupled fast output. These microcells are arranged in a close-packed array with all of the like terminals (e.g. all of the anodes) summed together. The array of microcells can thus be considered as a single photodiode sensor with three terminals: anode, cathode and fast output.

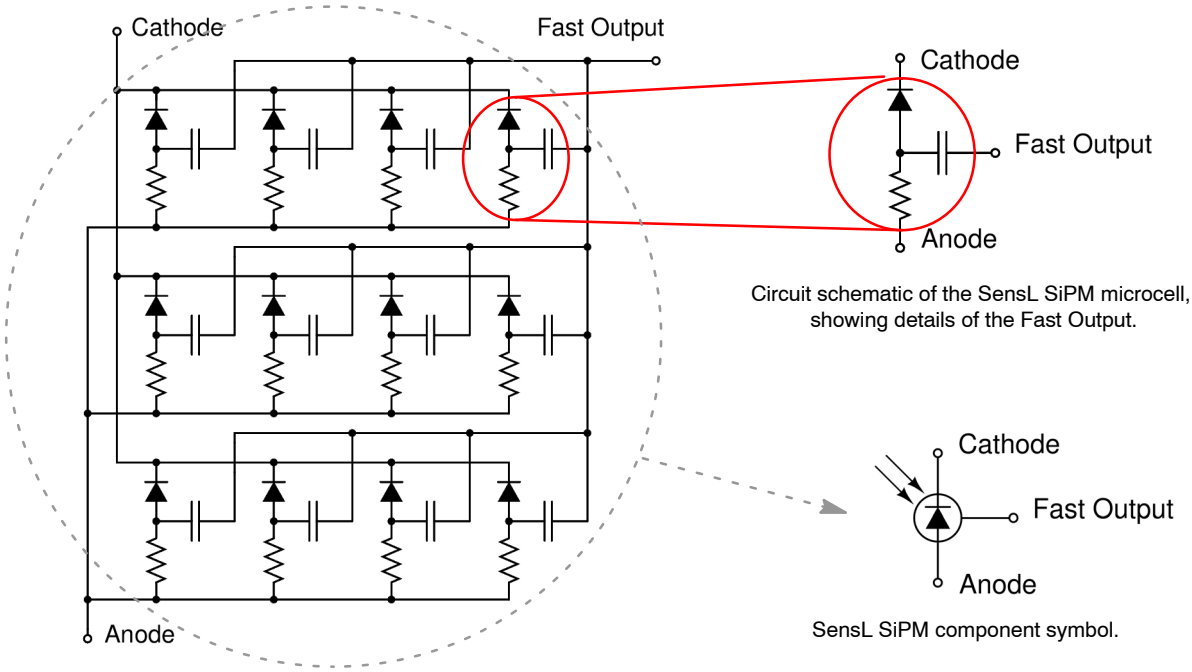

Circuit schematic of the SensL SiPM microcell, showing details of the Fast Output.

SensL SiPM component symbol.

Simplified circuit schematic of the SensL® SiPM showing only a 12 microcell example. Typically, SiPM sensors have hundreds or thousands of microcells.

Figure 2. Circuit Schematic

Share Feedback
Your Opinion Matters

PERFORMANCE

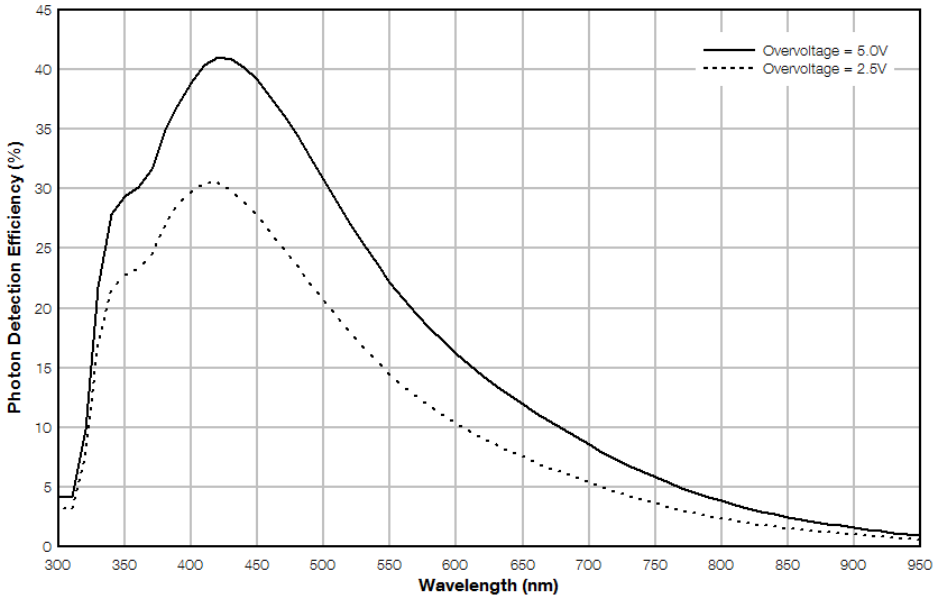

Figure 3. PDE versus Wavelength
(MicroFC−30035−SMT)

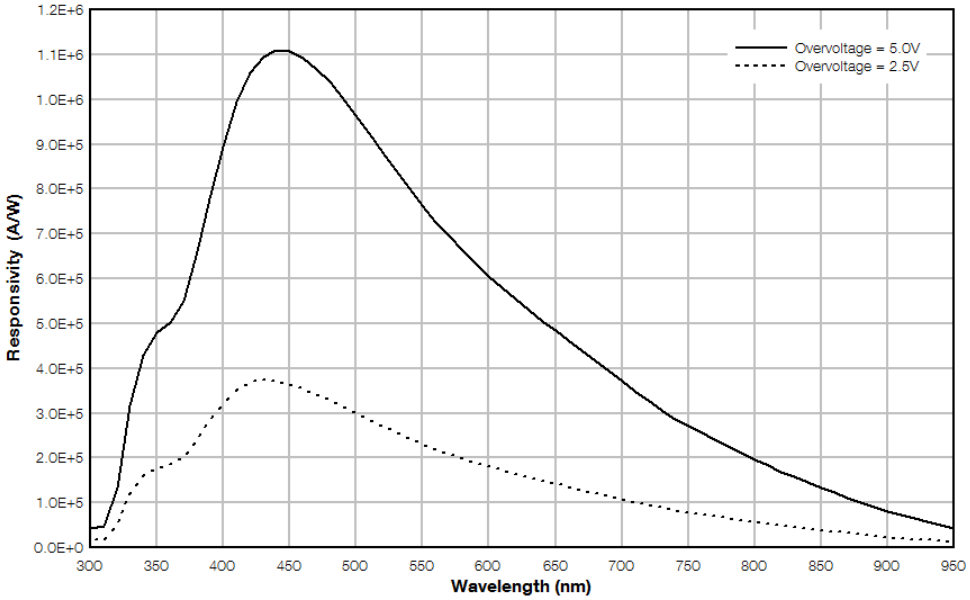

Figure 4. Responsivity versus Wavelength
(MicroFC−30035−SMT)

Share Feedback
Your Opinion Matters

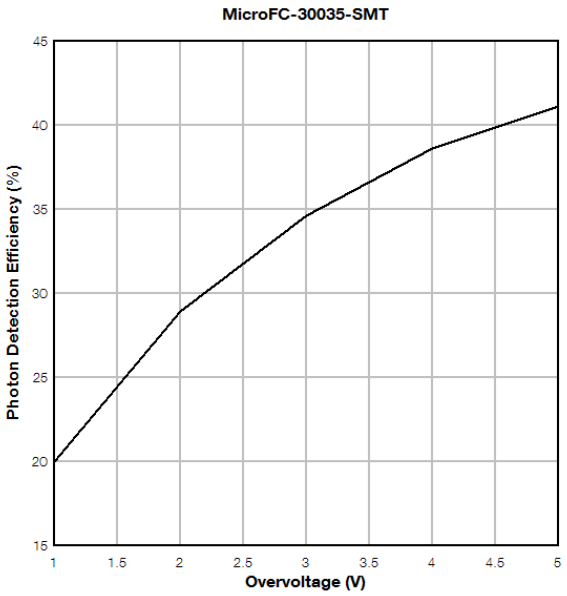

Figure 5. PDE at 420 nm versus Voltage

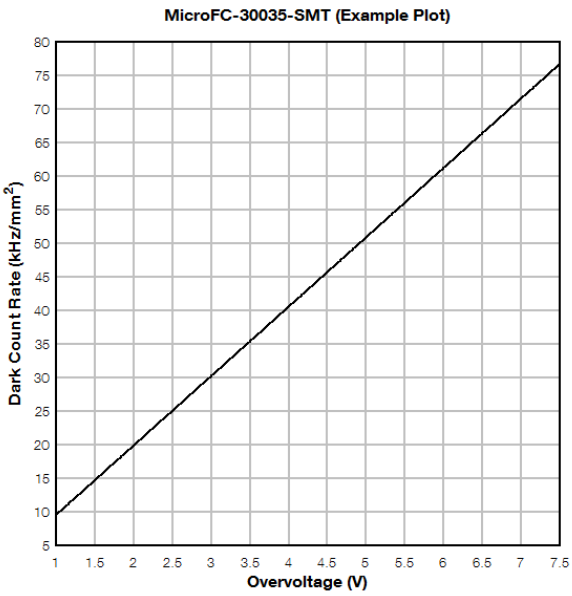

Figure 6. Dark Count Rate versus Overvoltage

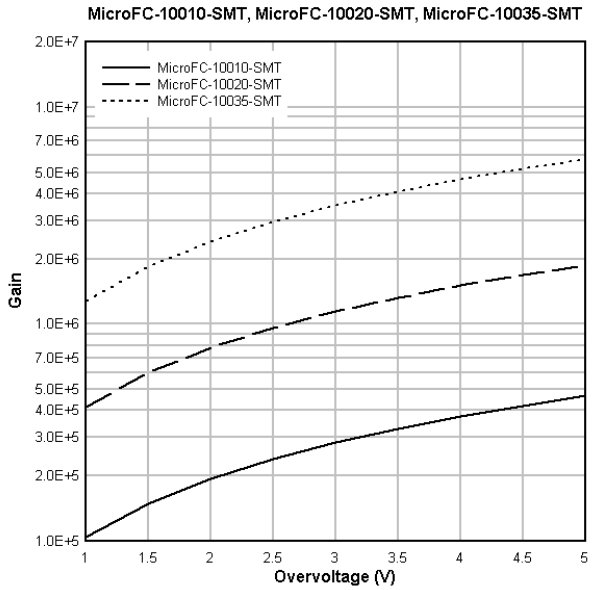

Figure 7. Gain versus Overvoltage

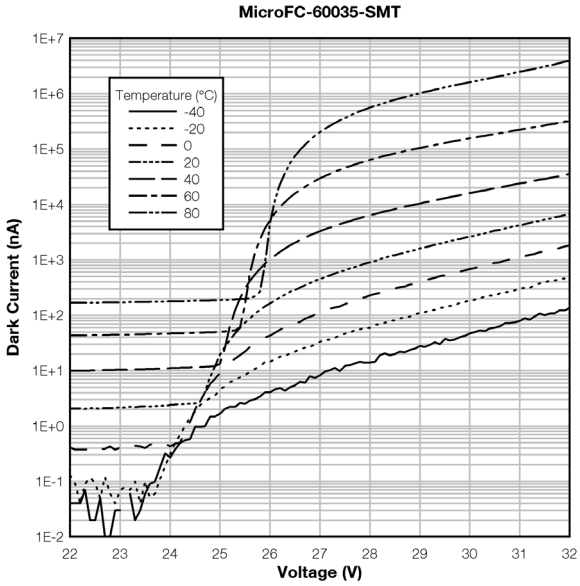

Figure 8. Dark Current versus Voltage and Temperature

Share Feedback
Your Opinion Matters

EVALUATION BOARD OPTIONS

SMA Biasing Board (MicroFC−SMA−XXXXX)

The MicroFC−SMA is a printed circuit board (PCB) that can facilitate the evaluation of the C−Series SMT sensors. The board has three female SMA connectors for connecting the bias voltage, the standard output from the anode and the fast output signal. The output signals can be connected directly to a 50 Ω-terminated oscilloscope for viewing. The biasing and output signal tracks are laid out in such a way as to preserve the fast timing characteristics of the sensor.

The MicroFC−SMA is recommended for users who require a plug-and-play set-up to quickly evaluate C−Series SMT sensors with optimum timing performance. The board also allows the standard output from the anode-cathode readout to be observed at the same time as the fast output. The outputs can be connected directly to the oscilloscope or measurement device, but external preamplification may be required to boost the signal. The table below lists the SMA board connections. The SMA board electrical schematics are available to download in AND9809/D.

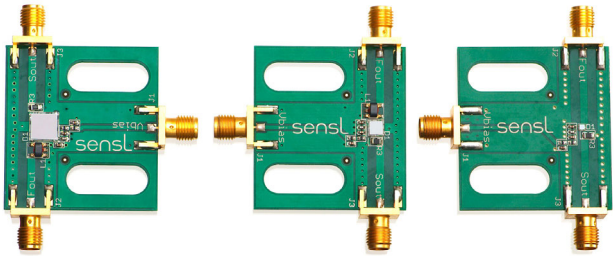

Figure 9. SMA Biasing Board

MicroFC−SMA−XXXXX	
Output	**Function**
Vbias	Positive bias input (cathode)
Fout	Fast output
Sout	Standard output (anode)

Pin Adapter (MicroFC−SMTPA−XXXXX)

The SMT Pin Adapter board (SMTPA) is a small PCB board that houses the SMT sensor and has through-hole pins to allow for use with standard sockets or probe clips. This product is useful for those needing a quick way to evaluate the C−Series SMT sensors without the need for specialist surface-mount soldering. While this is a ‘quick fix’ suitable for many evaluations, it should be noted that the timing performance from this board will not be optimized and if the best possible timing performance is required, the MicroFC−SMA−XXXXX is recommended. The pin-out information is shown in the table below. The SMTPA board electrical schematics are shown in Figure 12 and are available to download in AND9809/D.

Figure 10. Pin Adapter

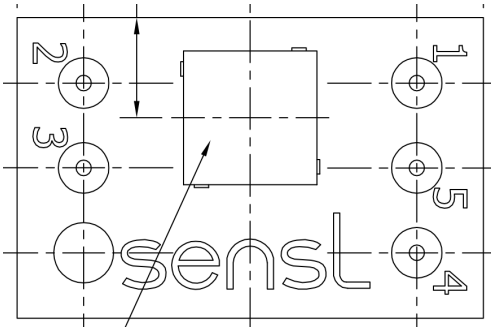

Figure 11. MicroFC−SMTPA−XXXXX

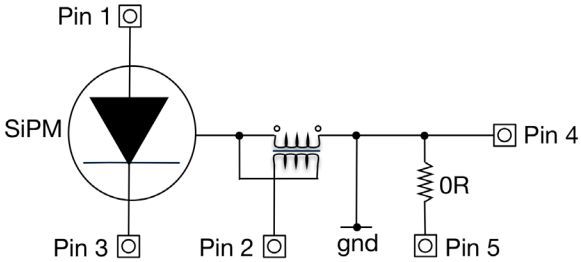

Figure 12. SMTPA Board Circuit Schematic

MicroFC−SMTPA−XXXXX	
Pin No.	**Connection**
1	Anode
2	Fast output
3	Cathode
4	Ground
5	No connect

Share Feedback
Your Opinion Matters

PACKAGE DIMENSIONS

(All Dimensions in mm)

MicroFC−60035−SMT

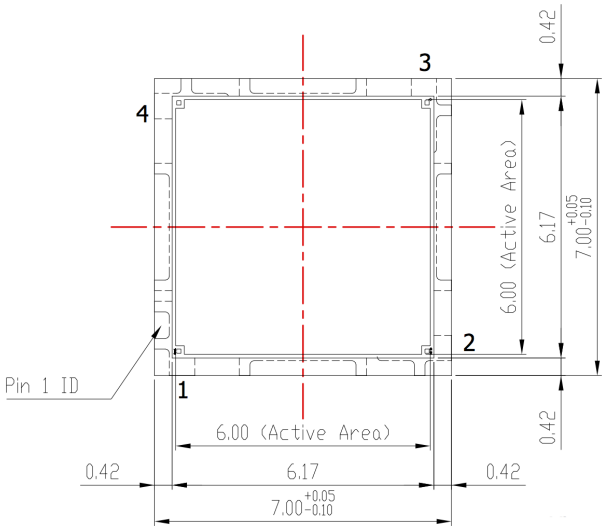

TOP VIEW

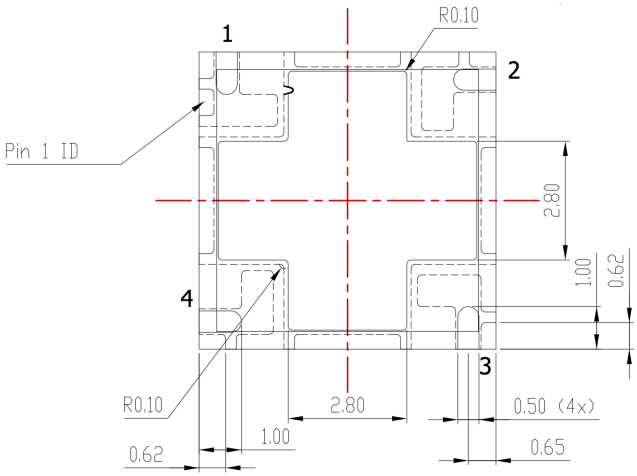

BOTTOM VIEW

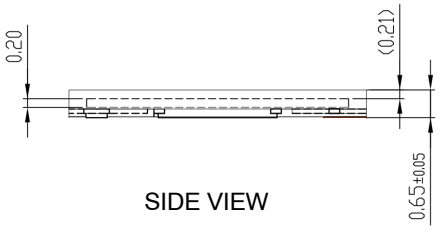

SIDE VIEW

Pin Assignments	
Pin #	MicroFC−60035−SMT
1	Anode
2	Fast Output
3	Cathode
4, 5	No Connect*

*The 'No Connect' pin 4 should be soldered to the PCB. This pin can be connected to ground but it can also be left floating without affecting the dark noise. It is recommended that the Pin 5 paddle is NOT soldered to the PCB and is left floating to achieve optimal soldering on pins 1 to 4. Please note the full advice in the CAD file.

The complete MicroFC−60035−SMT POD is available to download here.

Share Feedback
Your Opinion Matters

PACKAGE DIMENSIONS

(All Dimensions in mm)

MicroFC−30020−SMT, MicroFC−30035−SMT, MicroFC−30050−SMT

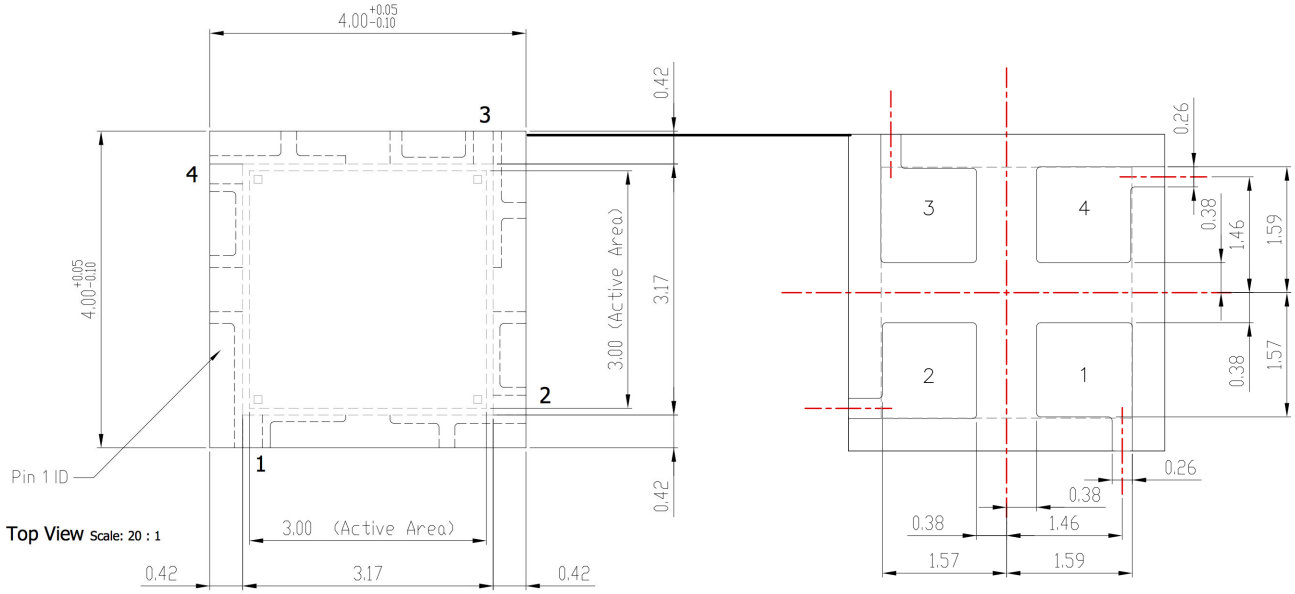

TOP VIEW

BOTTOM VIEW

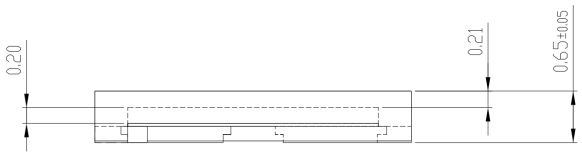

SIDE VIEW

Pin Assignments	
Pin #	MicroFC−300XX−SMT
1	Anode
2	Fast Output
3	Cathode
4	No Connect*

*The 'No Connect' pin 4 should be soldered to the PCB. It can be connected to ground but it can also be left floating without affecting the dark noise.

The complete MicroFC−300xx−SMT POD is available to download here.

Share Feedback
Your Opinion Matters

PACKAGE DIMENSIONS

(All Dimensions in mm)

MicroFC−10010−SMT, MicroFC−10020−SMT & MicroFC−10035−SMT

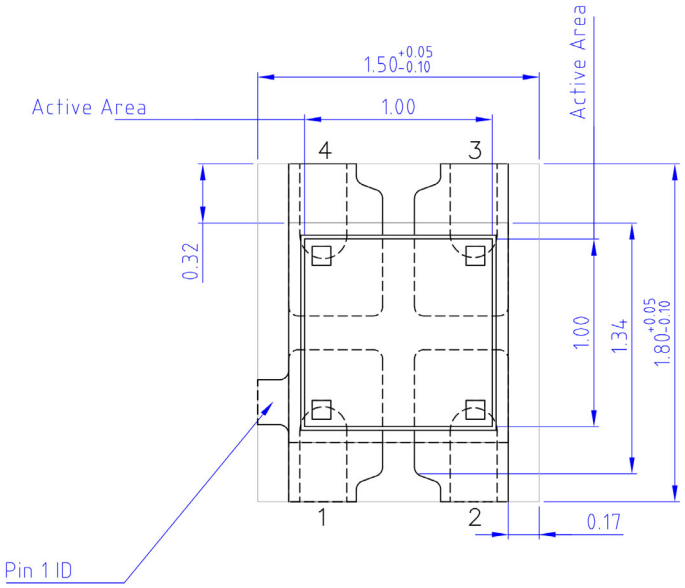

TOP VIEW

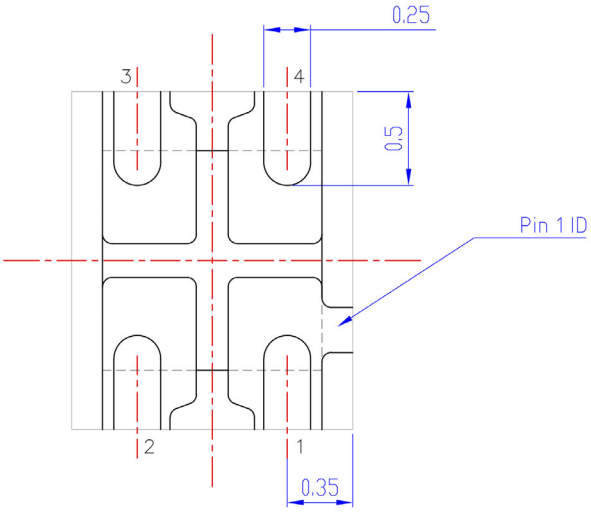

BOTTOM VIEW

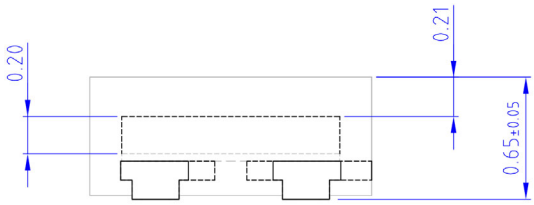

SIDE VIEW

Pin Assignments	
Pin #	MicroFC−100XX−SMT
1	Anode
2	Fast Output
3	Cathode
4	No Connect*

*The 'No Connect' pin 4 should be soldered to the PCB. It can be connected to ground but it can also be left floating without affecting the dark noise.

The complete MicroFC−100XX−SMT POD is available to download here.

Share Feedback
Your Opinion Matters

PACKAGE DIMENSIONS

(All Dimensions in mm)

MicroFC−SMTPA Board

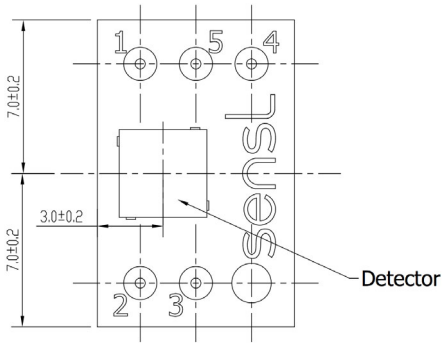

TOP VIEW

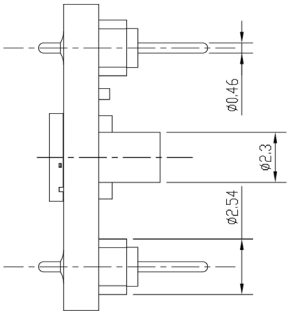

SIDE VIEW

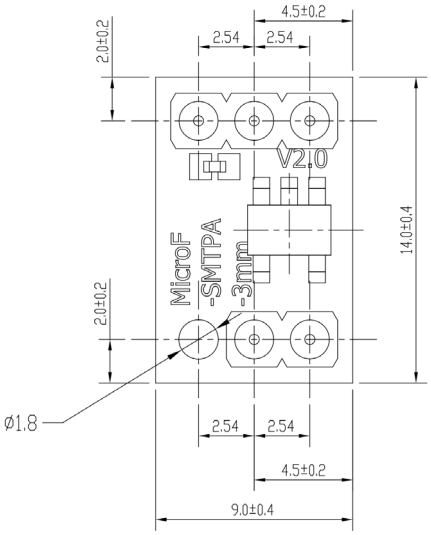

BOTTOM VIEW

The electrical schematics for the SMTPA board is available in AND9809/D.

MicroFC−SMA Board

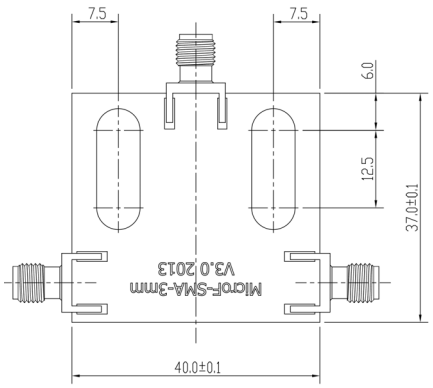

BOTTOM VIEW

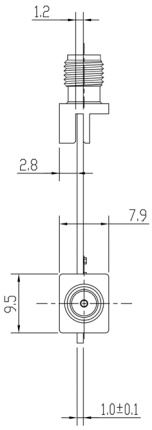

SIDE VIEW

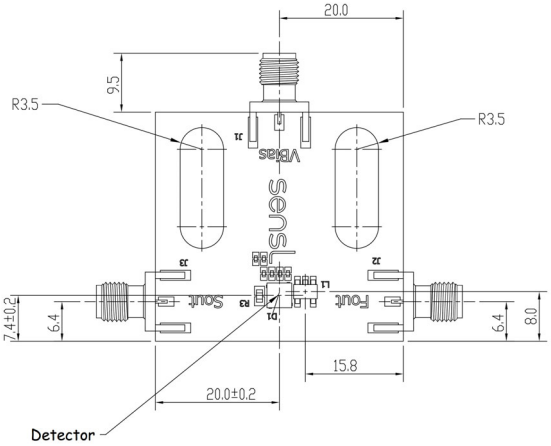

TOP VIEW

The electrical schematics for the SMA board is available in AND9809/D.

Share Feedback
Your Opinion Matters

USEFUL LINKS

- Introduction to Silicon Photomultipliers Application Note − If you are new to SiPM, this document explains their operation and main performance parameters.
- Biasing and Readout Application Note − This document gives detailed information on how to bias the sensor for both standard and fast configurations, and amplifying and reading out the signal.
- How to Evaluate and Compare Silicon Photomultipliers Application Note − Information on what to consider when selecting an SiPM.
- Handling and Soldering Guide − This document gives information on safe handling of the sensors and soldering to PCB.

ORDERING INFORMATION

Table 5. ORDERING INFORMATION

Product Code (Note 11)	**Microcell Size (Total Number)**	**Sensor Active Area**	**Package Type**	**Delivery Options** (Note 12)
10000 Series				
MICROFC−10010−SMT	10 μm (2880 microcells)	1 mm × 1 mm	4-side tileable, surface mount package (SMT)	TR1, TR
MICROFC−SMA−10010−GEVB			SMT sensor mounted onto a PCB with SMA connectors for bias and output.	PK
MICROFC−SMTPA−10010−GEVB			SMT sensor mounted onto a pin adapter board.	PK
MICROFC−10020−SMT	20 μm (1296 microcells)		4-side tileable, surface mount package (SMT)	TR1, TR
MICROFC−SMA−10020−GEVB			SMT sensor mounted onto a PCB with SMA connectors for bias and output.	PK
MICROFC−SMTPA−10020−GEVB			SMT sensor mounted onto a pin adapter board.	PK
MICROFC−10035−SMT	35 μm (504 microcells)		4-side tileable, surface mount package (SMT)	TR1, TR
MICROFC−SMA−10035−GEVB			SMT sensor mounted onto a PCB with SMA connectors for bias and output.	PK
MICROFC−SMTPA−10035−GEVB			SMT sensor mounted onto a pin adapter board.	PK

Share Feedback
Your Opinion Matters

Table 5. ORDERING INFORMATION (continued)

Product Code (Note 11)	Microcell Size (Total Number)	Sensor Active Area	Package Type	Delivery Options (Note 12)
30000 Series				
MICROFC−30020−SMT	20 μm (10998 microcells)	3 mm × 3 mm	4-side tileable, surface mount package (SMT)	TR1, TR
MICROFC−SMA−30020−GEVB			SMT sensor mounted onto a PCB with SMA connectors for bias and output.	PK
MICROFC−SMTPA−30020−GEVB			SMT sensor mounted onto a pin adapter board	PK
MICROFC−30035−SMT	35 μm (4774 microcells)		4-side tileable, surface mount package (SMT)	TR1, TR
MICROFC−SMA−30035−GEVB			SMT sensor mounted onto a PCB with SMA connectors for bias and output.	PK
MICROFC−SMTPA−30035−GEVB			SMT sensor mounted onto a pin adapter board	PK
MICROFC−30050−SMT	50 μm (2668 microcells)		4-side tileable, surface mount package (SMT)	TR1, TR
MICROFC−SMA−30050−GEVB			SMT sensor mounted onto a PCB with SMA connectors for bias and output.	PK
MICROFC−SMTPA−30050−GEVB			SMT sensor mounted onto a pin adapter board	PK
60000 Series				
MICROFC−60035−SMT	35 μm (18980 microcells)	6mm × 6mm	4-side tileable, surface mount package (SMT)	TR1, TR
MICROFC−SMA−60035−GEVB			SMT sensor mounted onto a PCB with SMA connectors for bias and output.	PK
MICROFC−SMTPA−60035−GEVB			SMT sensor mounted onto a pin adapter board	PK

11. All Devices are Pb-Free and are RoHS Compliant.
12. The two-letter delivery option code should be appended to the order number, e.g.) to receive MICROFC−60035−SMT on tape and reel, use MICROFC−60035−SMT−TR. The codes are as follows:
    PK = ESD Package
    TR1 = Tape
    TR = Tape and Reel

    There is a minimum order quantity (MOQ) of 3000 for the tape and reel (TR) option. The TR option is only available in multiples of the MOQ.

SensL is a registered trademark of Semiconductor Components Industries, LLC dba “**onsemi**” or its affiliates and/or subsidiaries in the United States and/or other countries.

Share Feedback
Your Opinion Matters

onsemi, onsemi, and other names, marks, and brands are registered and/or common law trademarks of Semiconductor Components Industries, LLC dba "**onsemi**" or its affiliates and/or subsidiaries in the United States and/or other countries. **onsemi** owns the rights to a number of patents, trademarks, copyrights, trade secrets, and other intellectual property. A listing of **onsemi**'s product/patent coverage may be accessed at www.onsemi.com/site/pdf/Patent−Marking.pdf. **onsemi** reserves the right to make changes at any time to any products or information herein, without notice. The information herein is provided "as−is" and **onsemi** makes no warranty, representation or guarantee regarding the accuracy of the information, product features, availability, functionality, or suitability of its products for any particular purpose, nor does **onsemi** assume any liability arising out of the application or use of any product or circuit, and specifically disclaims any and all liability, including without limitation special, consequential or incidental damages. Buyer is responsible for its products and applications using **onsemi** products, including compliance with all laws, regulations and safety requirements or standards, regardless of any support or applications information provided by **onsemi**. "Typical" parameters which may be provided in **onsemi** data sheets and/or specifications can and do vary in different applications and actual performance may vary over time. All operating parameters, including "Typicals" must be validated for each customer application by customer's technical experts. **onsemi** does not convey any license under any of its intellectual property rights nor the rights of others. **onsemi** products are not designed, intended, or authorized for use as a critical component in life support systems or any FDA Class 3 medical devices or medical devices with a same or similar classification in a foreign jurisdiction or any devices intended for implantation in the human body. Should Buyer purchase or use **onsemi** products for any such unintended or unauthorized application, Buyer shall indemnify and hold **onsemi** and its officers, employees, subsidiaries, affiliates, and distributors harmless against all claims, costs, damages, and expenses, and reasonable attorney fees arising out of, directly or indirectly, any claim of personal injury or death associated with such unintended or unauthorized use, even if such claim alleges that **onsemi** was negligent regarding the design or manufacture of the part. **onsemi** is an Equal Opportunity/Affirmative Action Employer. This literature is subject to all applicable copyright laws and is not for resale in any manner.

ADDITIONAL INFORMATION

TECHNICAL PUBLICATIONS:
Technical Library: www.onsemi.com/design/resources/technical−documentation
onsemi Website: www.onsemi.com

ONLINE SUPPORT: www.onsemi.com/support
For additional information, please contact your local Sales Representative at
www.onsemi.com/support/sales

Mouser Electronics

Authorized Distributor

Click to View Pricing, Inventory, Delivery & Lifecycle Information:

onsemi:

MICROFC-SMTPA-10010-GEVB MICROFC-SMA-30020-GEVB MICROFC-SMTPA-30020-GEVB MICROFC-SMA-10010-GEVB MICROFC-SMA-10020-GEVB MICROFC-SMTPA-30035-GEVB MICROFC-SMTPA-60035-GEVB MICROFC-SMA-30050-GEVB MICROFC-SMA-10035-GEVB MICROFC-SMTPA-30050-GEVB MICROFC-SMA-30035-GEVB MICROFC-SMA-60035-GEVB MICROFC-SMTPA-10020-GEVB MICROFC-SMTPA-10035-GEVB