Silicon Photomultipliers (SiPM), High PDE and Timing Resolution Sensors in a TSV Package

J-Series SiPM Sensors

onsemi's J-Series low-light sensors feature a high PDE (photon detection efficiency) that is achieved using a high-volume, P-on-N silicon foundry process. The J-Series sensors incorporate major improvements in the transit time spread which results in a significant improvement in the timing performance of the sensor. J-Series sensors are available in different sizes (3 mm, 4 mm and 6 mm) and use a TSV (Through Silicon Via) process to create a package with minimal deadspace, that is compatible with industry standard lead-free, reflow soldering processes.

The J-Series Silicon Photomultipliers (SiPM) combine high performance with the practical advantages of solid-state technology: low operating voltage, excellent temperature stability, robustness, compactness, output uniformity, and low cost. For more information on the J-Series sensors please refer to the website.

ORDERING INFORMATION

See detailed ordering and shipping information on page 11 of this data sheet.

Table 1. GENERAL PARAMETERS

Parameter (Note 1)	**Minimum**	**Typical**	**Maximum**	**Unit**
Breakdown Voltage (Vbr) (Note 2)	24.2		24.7	V
Overvoltage (OV)	1		6	V
Operating Voltage (Vop = Vbr + OV))	25.2		30.7	V
Spectral Range (Note 3)	200		900	nm
Peak PDE Wavelength (λp)		420		nm
Temperature dependence of Vbr		21.5		mV/°C

1. All measurements made at 21°C unless otherwise stated.
2. The breakdown voltage (Vbr) is defined as the value of the voltage intercept of a straight line fit to a plot of √I vs V, where I is the current and V is the bias voltage.
3. The range where PDE > 2.0% at Vbr + 6.0 V.

Table 2. PHYSICAL PARAMETERS

Parameter	**3 mm**	**4 mm**	**6 mm**
	30020, 30035	**40035**	**60035**
Active Area	3.07×3.07 mm^2	3.93×3.93 mm^2	6.07×6.07 mm^2
No. of Microcells	30020: 14,410 30035: 5,676	40035: 9,260	60035: 22,292
Microcell Fill Factor	30020: 62% 30035: 75%	40035: 75%	60035: 75%

© Semiconductor Components Industries, LLC, 2017

Table 3. PERFORMANCE PARAMETERS

Parameter (Note 4)	30035		40035		60035		Unit
	Overvoltage						
	+2.5 V	+6 V	+2.5 V	+6 V	+2.5 V	+6 V	Unit
PDE (Note 5)	38	50	38	50	38	50	%
Dark Count Rate	50	150	50	150	50	150	kHz/mm^2
Gain (anode-cathode)	2.9×10^6	6.3×10^6	2.9×10^6	6.3×10^6	2.9×10^6	6.3×10^6	
Dark Current − typical	0.23	1.9	0.35	3.0	0.9	7.5	μA
Dark Current − maximum	0.31	3.00	0.45	4.0	1.25	12.0	
Rise Time (Note 6) − anode-cathode output	90	110	90	110	180	250	ps
Microcell Recharge Time Constant (Note 7)	45		48		50		ns
Capacitance (Note 8) (anode output)	1070		1800		4140		pF
Capacitance (Note 8) (fast output)	40		70		160		pF
Fast Output Pulse Width (FWHM)	1.5		1.7		3.0		ns
Crosstalk	8	25	8	25	8	25	%
Afterpulsing	0.75	5.0	0.75	5.0	0.75	5.0	%

Parameter (Note 4)	30020		Unit
	Overvoltage		
	+2.5 V	+5 V	Unit
PDE (Note 5)	30	38	%
Dark Count Rate	50	125	kHz/mm^2
Gain (anode-cathode)	1.0×10^6	1.9×10^6	
Dark Current − typical	0.1	0.45	μA
Dark Current − maximum	0.2	0.72	
Rise Time (Note 6) − anode-cathode output	130	160	ps
Microcell Recharge Time Constant (Note 7)	15		ns
Capacitance (Note 8) (anode output)	1040		pF
Capacitance (Note 8) (fast output)	50		pF
Fast Output Pulse Width (FWHM)	1.4		ns
Crosstalk	2.5	7.5	%
Afterpulsing	0.75	5.0	%

4. All measurements made at 21°C unless otherwise stated.
5. PDE does not contain afterpulsing or crosstalk, and is quoted at the peak wavelength (λ_p).
6. Measured as time to go from 10% to 90% of the peak amplitude and measured over a 1 Ω series output resistor.
7. RC charging time constant of the microcell (τ).
8. Capacitance values are for the complete TSV package.

Table 4. TVS PACKAGE SPECIFICS

		3 mm	4 mm	6 mm
		30020, 30035	40035	60035
Package Dimensions		3.16×3.16 mm^2	4.00×4.00 mm^2	6.13×6.13 mm^2
Recommended Operating Temperature Range		−40°C − +85°C		
Soldering Conditions		Reflow Solder		
Cover Material		Glass		
Cover Refractive Index		1.53 @ 436 nm		
Moisture Sensitivity Level	Tape & reel	MSL3*		
	Cut tape	MSL4*		
Maximum Average Current		10 mA	10 mA	15 mA

*Please refer to the TSV Handling and Soldering guide for more information on MSL for different delivery options.

Share Feedback
Your Opinion Matters

PERFORMANCE PLOTS

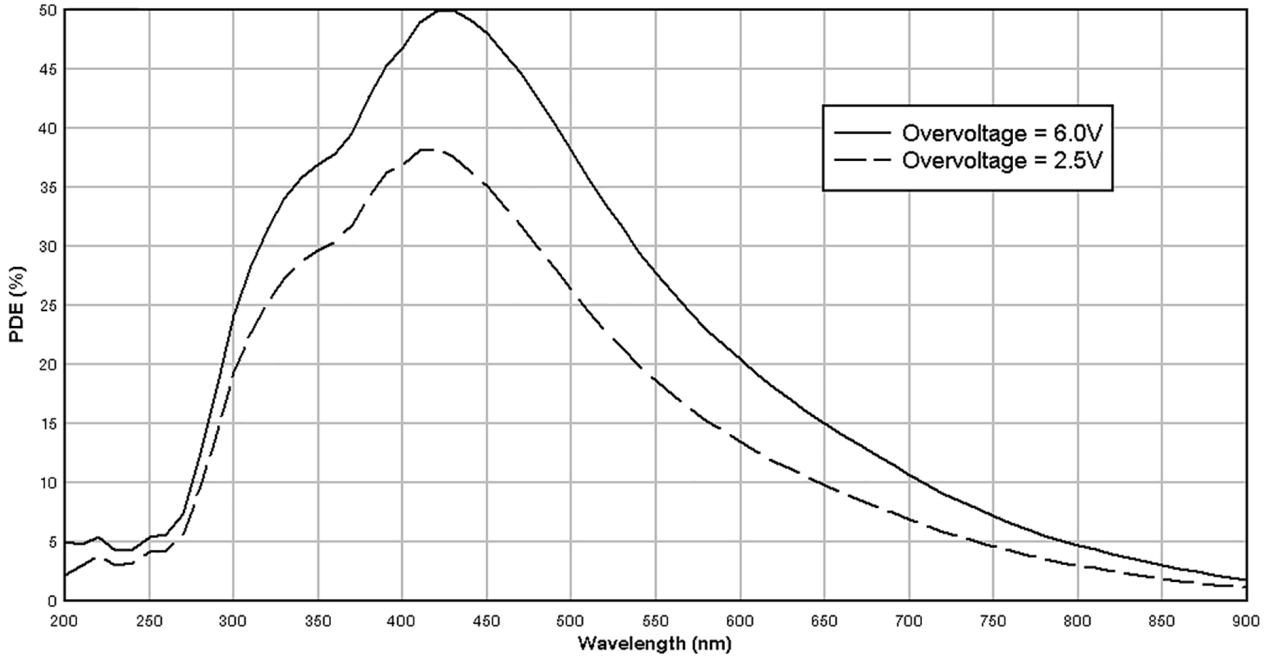

Figure 1. Photon Detection Efficiency (PDE)
(MicroFJ−60035−TSV)

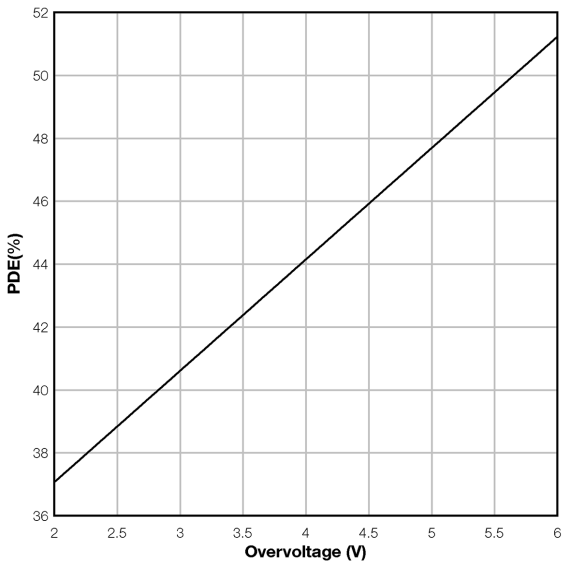

Figure 2. PDE vs. Overvoltage
(MicroFJ−60035−TSV)

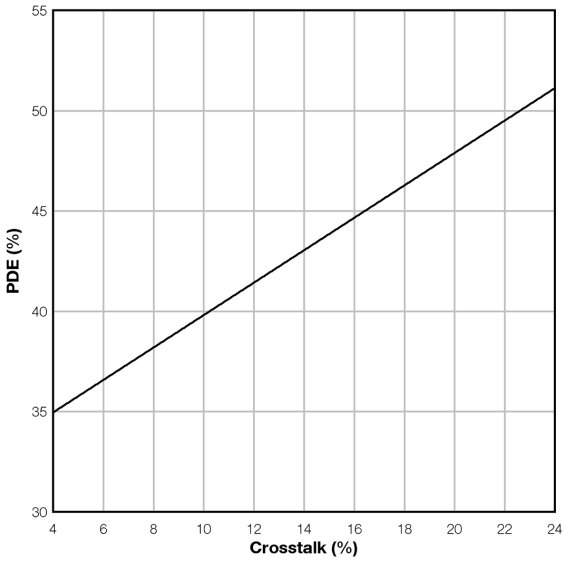

Figure 3. PDE vs. Crosstalk
(MicroFJ−60035−TSV)

Share Feedback
Your Opinion Matters

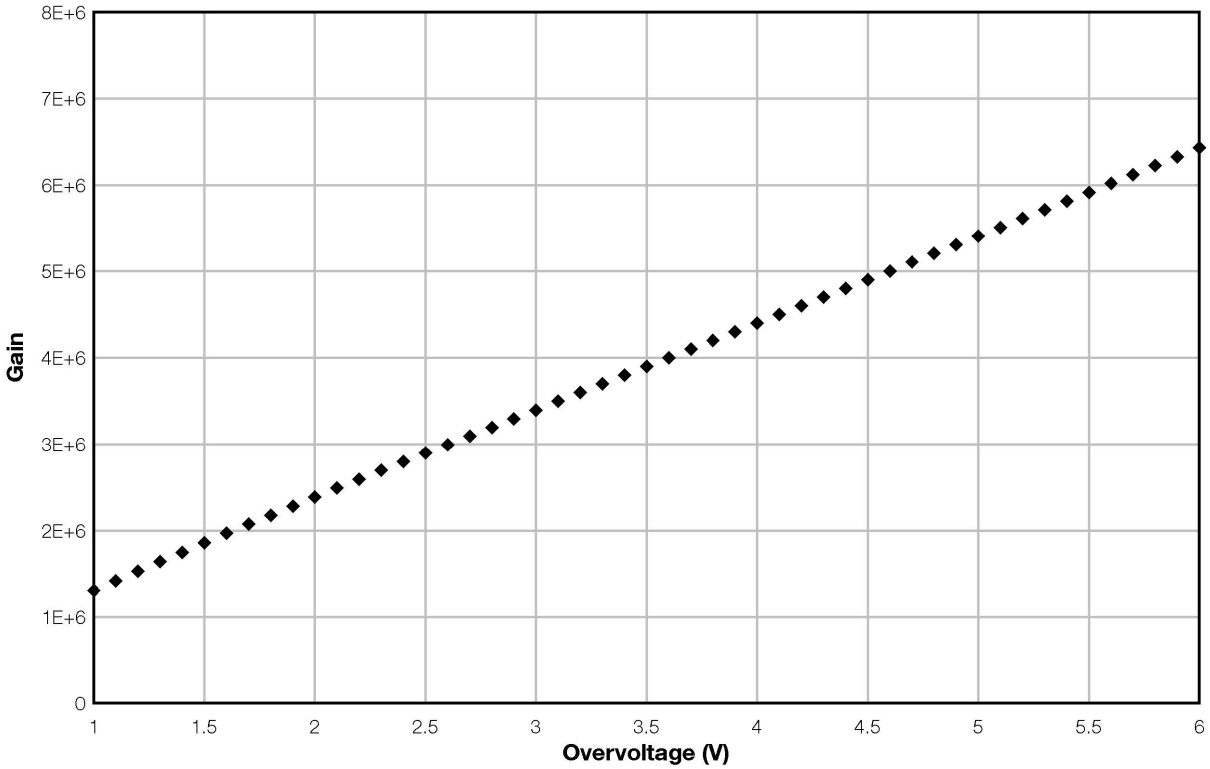

Figure 4. Gain vs. Overvoltage
(MicroFJ−30035−TSV)

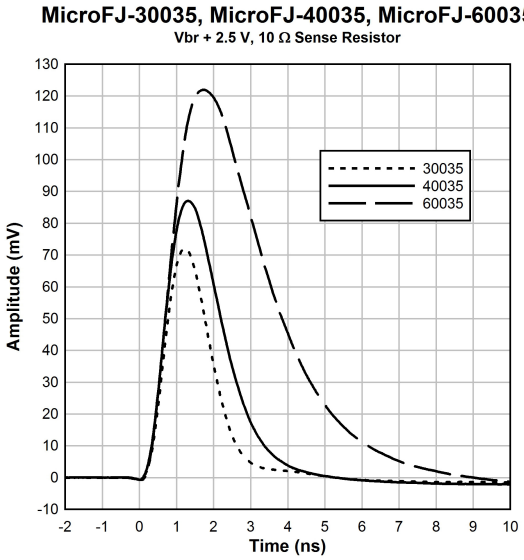

Figure 5. Fast Output Pulse Shape
(MicroFJ−30035, MicroFJ−40035, MicroFJ−60035
Vbr + 2.5 V, 10 Ω Sense Resistor)

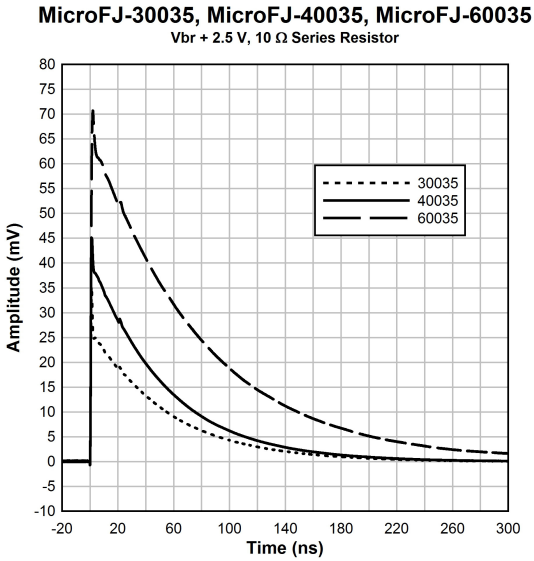

Figure 6. Standard Output Pulse Shape
(MicroFJ−30035, MicroFJ−40035, MicroFJ−60035
Vbr + 2.5 V, 10 Ω Sense Resistor)

Share Feedback
Your Opinion Matters

EVALUATION BOARD OPTIONS

SMA BIASING BOARD (MicroFJ−SMA−XXXXX)

The MicroFJ−SMA is a printed circuit board (PCB) that can facilitate the evaluation of the J-Series sensors. The board has three female SMA connectors for connecting the bias voltage, the standard output from the anode and the fast output signal. The output signals can be connected directly to a 50 Ω-terminated oscilloscope for viewing. The biasing and output signal tracks are laid out in such a way as to preserve the fast timing characteristics of the sensor.

The MicroFJ−SMA is recommended for users who require a plug-and-play set-up to quickly evaluate J-Series TSV sensors with optimum timing performance. The board also allows the standard output from the anode to be observed at the same time as the fast output. The outputs can be connected directly to the oscilloscope or measurement device, but external preamplification may be required to boost the signal. The table below lists the SMA board connections. The SMA board electrical schematics are available to download in the AND9808/D document.

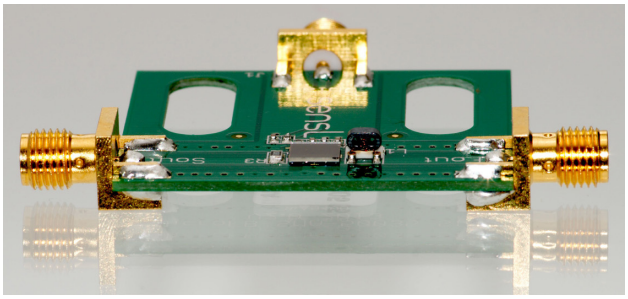

MicroFJ−SMA−XXXXX	
Output	**Function**
Vbias	Positive bias input (cathode)
Fout	Fast output
Sout	Standard output (anode)

PIN ADAPTER (MicroFJ−SMTPA−XXXXX)

The TSV Pin Adapter board (SMTPA) is a small PCB board that houses the TSV sensor and has through-hole pins to allow its use with standard sockets or probe clips. This product is useful for those needing a quick way to evaluate the TSV package without the need for specialist surface-mount soldering. While this is a ‘quick fix’ suitable for many evaluations, it should be noted that the timing performance from this board will not be optimized and if the best possible timing performance is required, the MicroFJ−SMA−XXXXX is recommended. The SMTPA circuit schematic is shown in Figure 8. Please consult the Readout and Biasing Application Note for further information on biasing. The SMTPA board electrical schematics are available to download in the AND9808/D.

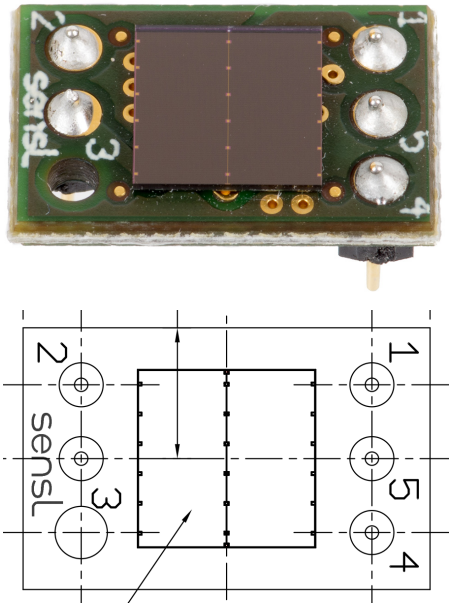

Figure 7. Top View of the SMTPA Board Showing the Pin Numbering

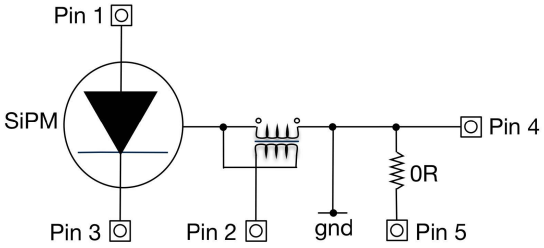

Figure 8. SMTPA Circuit Schematic

MicroFJ−SMTPA−XXXXX	
Pin No.	**Connection**
1	Anode
2	Fast output
3	Cathode
4	Ground
5	No connect

Share Feedback
Your Opinion Matters

CIRCUIT SCHEMATICS

An SiPM is formed of a large number (hundreds or thousands) of microcells. Each microcell (Figure 9) is an avalanche photodiode with its own quench resistor and a capacitively coupled fast output. These microcells are arranged in a close-packed array with all of the like terminals (e.g. all of the anodes) summed together (Figure 10). The array of microcells can thus be considered as a single photodiode sensor with three terminals: anode, cathode and fast output, as shown in Figure 11.

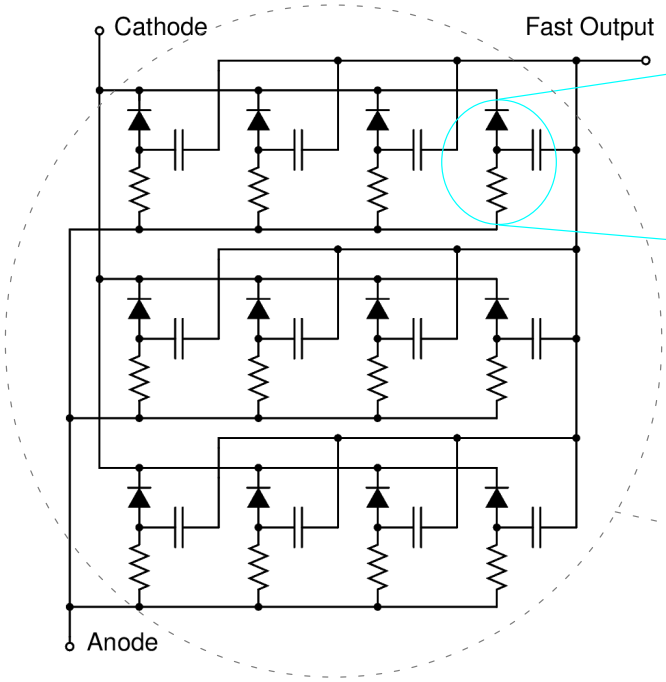

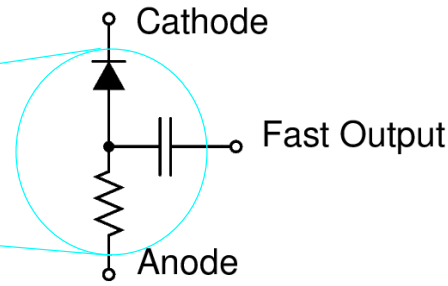

Figure 9. Circuit Schematic of the onsemi SiPM Microcell, showing Details of the Fast Output

Figure 10. Simplified Circuit Schematic of the onsemi SiPM showing only a 12 Microcell Example. Typically, SiPM Sensors have Hundreds or Thousands of Microcells

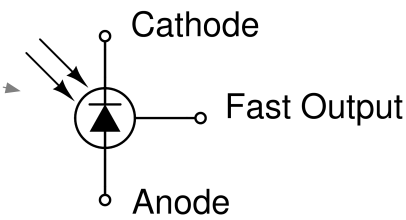

Figure 11. onsemi SiPM Component Symbol

TILING OF THE TSV PACKAGE

For the J-Series, **onsemi** has developed a market-leading, high-performance package using a TSV process. It is a chip-scale package that is compatible with lead-free, reflow soldering processes. The glass cover is ideal for coupling to scintillators or fibre optic elements.

The dead-space between the sensor active area and the edge of the package has been minimized, resulting in a package that can be tiled on 4 sides with high fill-factor. This allows multiple sensors to be configured into unique layouts for a wide range of custom applications. The distance between sensor packages can be as little as 200 μm when tiled, but actual alignment and placement tolerances will depend on the accuracy of the user's assembly process. An Application Note is available that gives advice on creating arrays of the TSV sensors.

Share Feedback
Your Opinion Matters

PACKAGE DIMENSIONS

(All Dimensions in mm)

MicroFJ−300XX−TSV

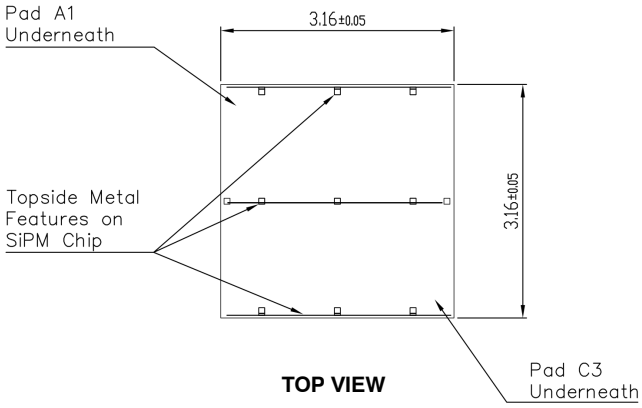

TOP VIEW

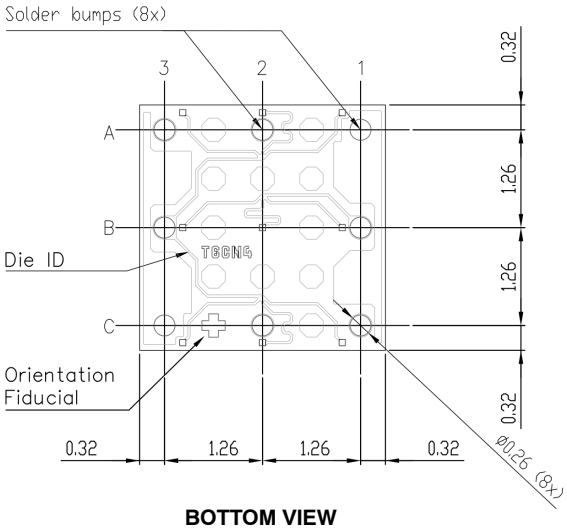

BOTTOM VIEW

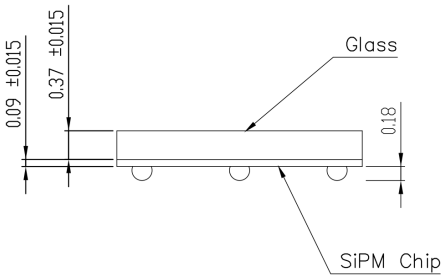

SIDE VIEW

Pin Assignments	
Pin Number	**MicroFJ−300XX−TSV**
B1	Anode
B3	Fast output
A1, C3	Cathode
All others	No Connect*

*The 'No Connect' pins are electrically isolated and should be soldered to a ground (or bias) plane to help with heat dissipation.

The MicroFJ−300XX−TSV−A2 CAD, and solder footprint, is available to download here.

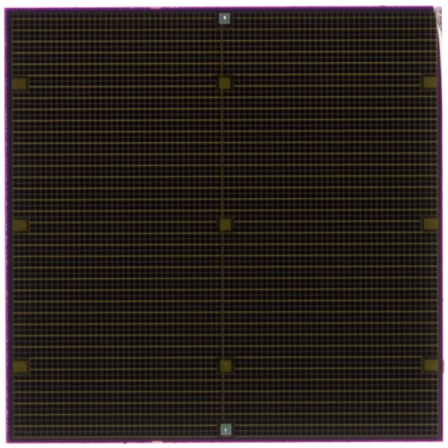

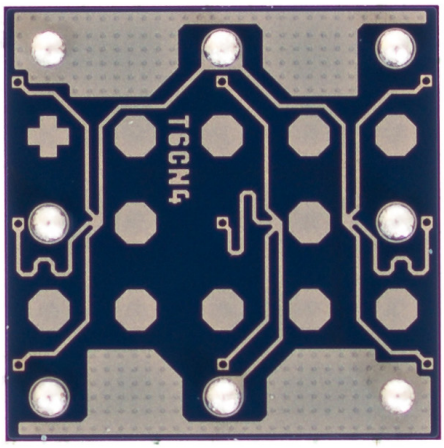

Share Feedback
Your Opinion Matters

PACKAGE DIMENSIONS

(All Dimensions in mm)

MicroFJ−40035−TSV

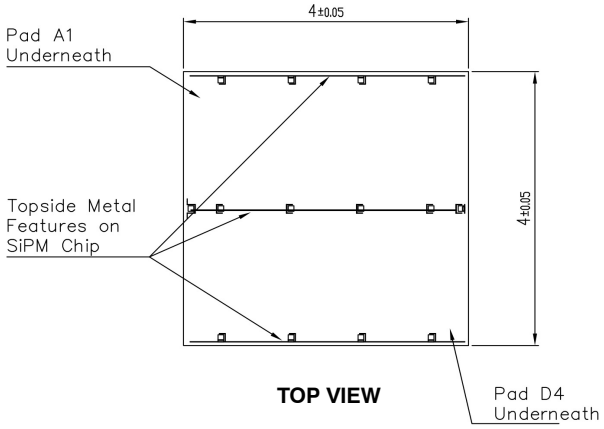

TOP VIEW

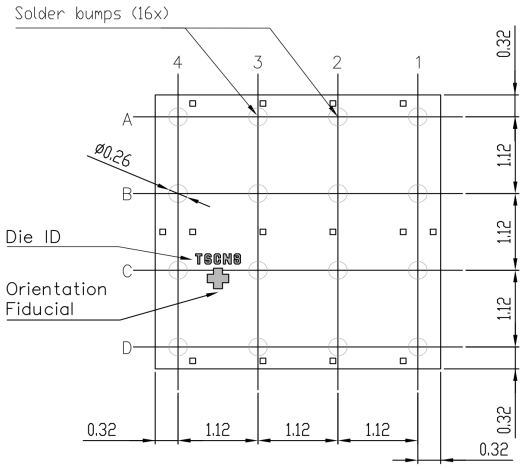

BOTTOM VIEW

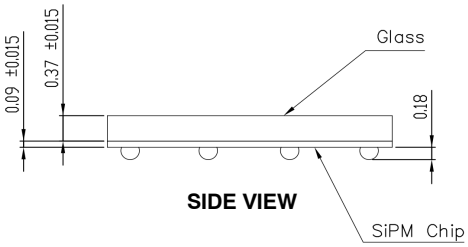

SIDE VIEW

Pin Assignments	
Pin Number	**MicroFJ−40035−TSV**
B1, C1	Anode
B4, C4	Fast output
A1, D4	Cathode
All others	No Connect*

*The 'No Connect' pins are electrically isolated and should be soldered to a ground (or bias) plane to help with heat dissipation.

The MicroFJ−40035−TSV CAD, and solder footprint, is available to download here.

Share Feedback
Your Opinion Matters

PACKAGE DIMENSIONS

(All Dimensions in mm)

MicroFJ−60035−TSV

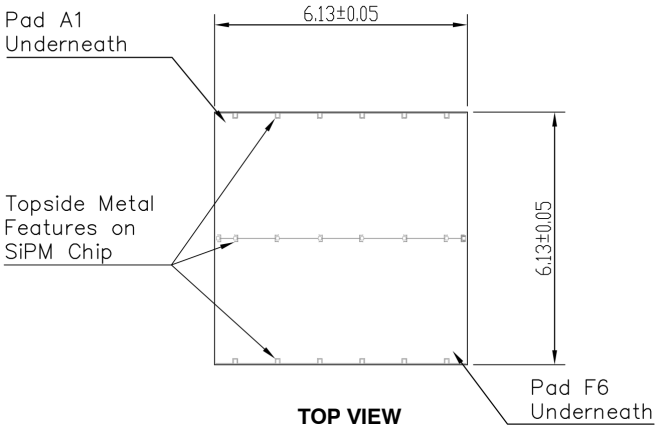

TOP VIEW

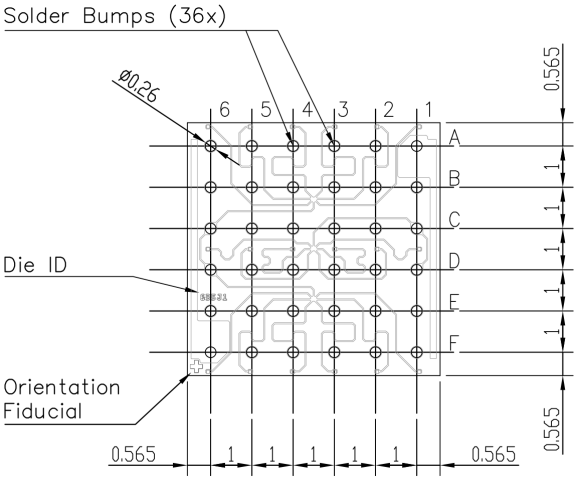

BOTTOM VIEW

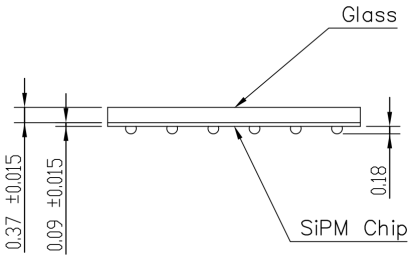

SIDE VIEW

Pin Assignments	
Pin Number	**MicroFJ−60035−TSV**
C1, D1	Anode
A1, F6	Cathode
C6, D6	Fast output
All others	No Connect*

*The 'No Connect' pins are electrically isolated and should be soldered to a ground (or bias) plane to help with heat dissipation.

The MicroFJ−60035−TSV CAD, and solder footprint, is available to download here.

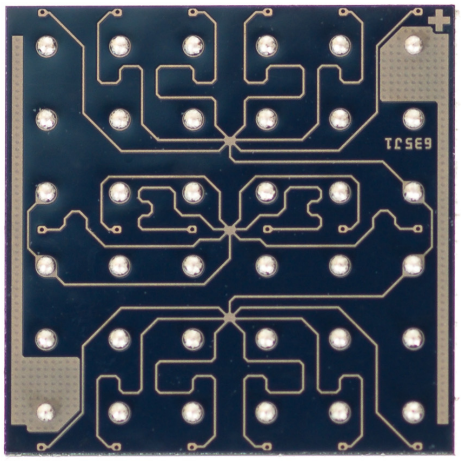

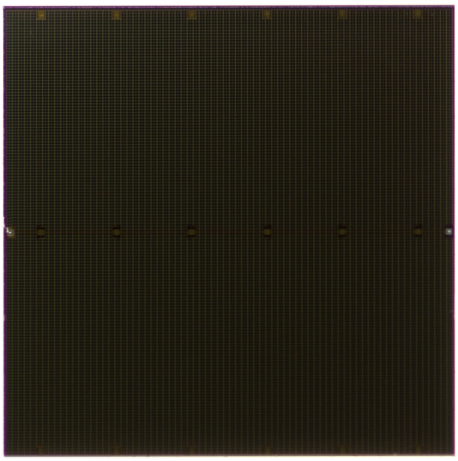

Share Feedback
Your Opinion Matters

MicroFJ−SMA−60035 Board

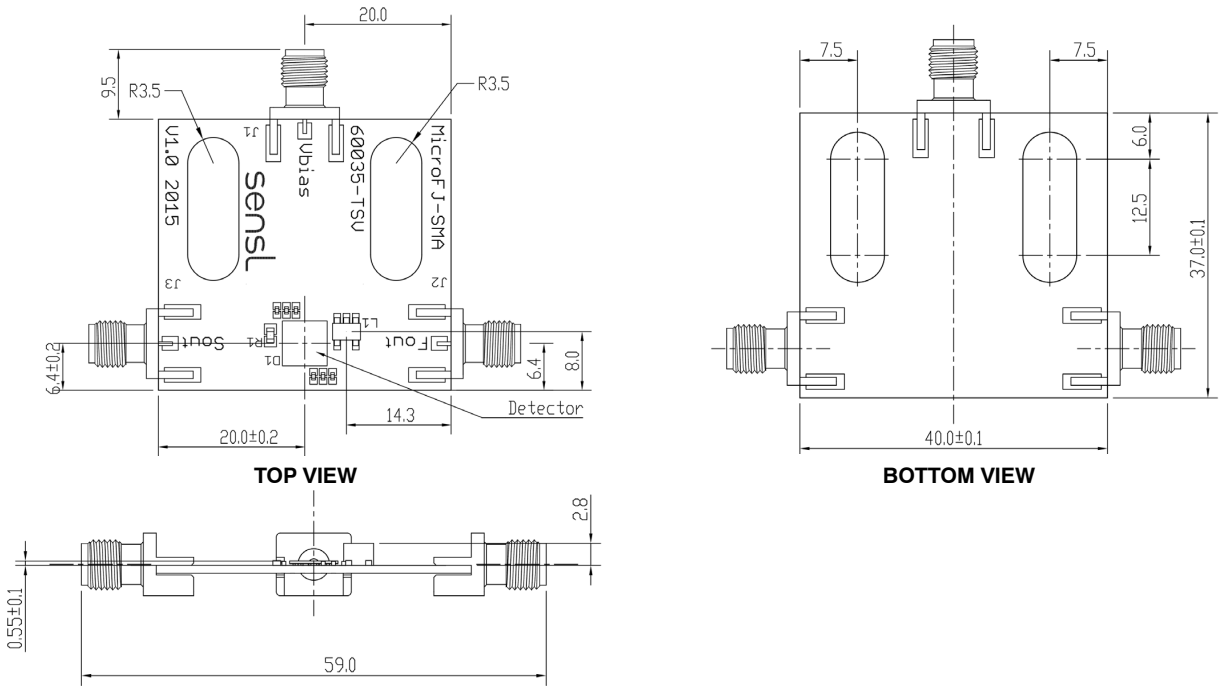

TOP VIEW

BOTTOM VIEW

SIDE VIEW

The complete CAD for the SMA boards can be downloaded from the website: 3 mm, 4 mm and 6 mm versions.

MicroFJ−SMTPA−60035 Board

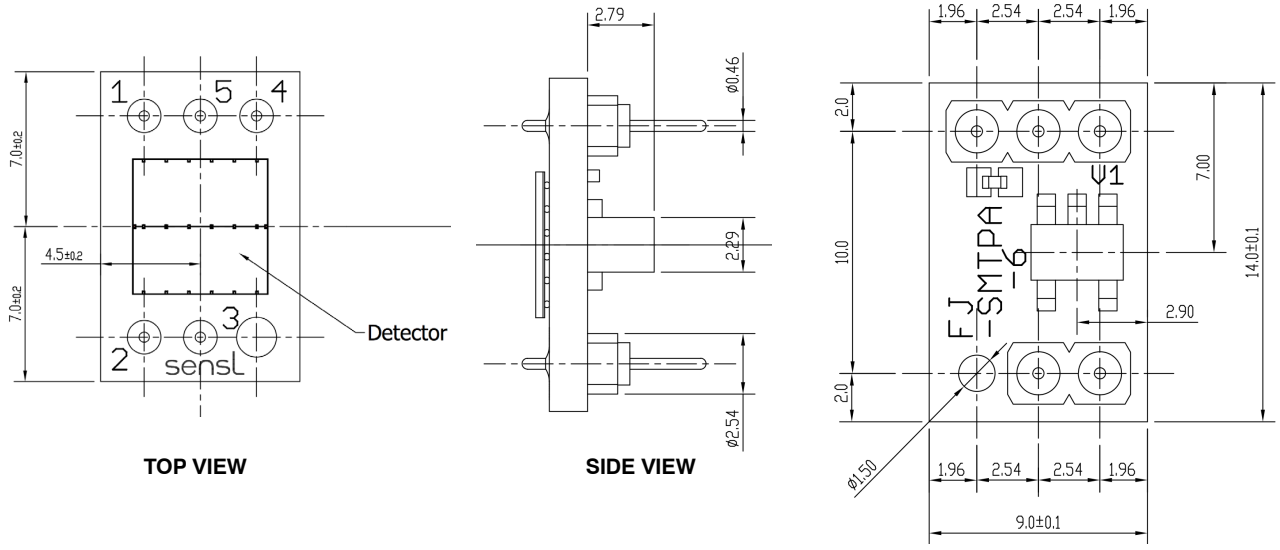

TOP VIEW

SIDE VIEW

BOTTOM VIEW

The complete CAD for the SMTPA boards can be downloaded from the website: 3 mm and 6 mm versions.

Share Feedback
Your Opinion Matters

ORDERING INFORMATION

Table 5. ORDERING INFORMATION

Product Code	Microcell Size (No. of Microcells)	Sensor Active Area	Description	Delivery Option (Note 9)
3 mm Sensors				
MICROFJ−30020−TSV	20 μm (14,410)	3.07 × 3.07 mm	4-side tileable, chip scale package with through-silicon vias (TSV)	TR1, TR
MICROFJ−SMA−30020−GEVB			TSV sensor mounted onto a PCB with three SMA connectors for bias, standard output and fast output	PK
MICROFJ−SMTPA−30020−GEVB			TSV sensor mounted onto a pin adapter board	PK
MICROFJ−30035−TSV	35 μm (5,676)		4-side tileable, chip scale package with through-silicon vias (TSV)	TR1, TR
MICROFJ−SMA−30035−GEVB			TSV sensor mounted onto a PCB with three SMA connectors for bias, standard output and fast output	PK
MICROFJ−SMTPA−30035−GEVB			TSV sensor mounted onto a pin adapter board	PK
4 mm Sensors				
MICROFJ−40035−TSV	35 μm (9,260)	3.93 × 3.93 mm	4-side tileable, chip scale package with through-silicon vias (TSV)	TR1, TR
MICROFJ−SMA−40035−GEVB			TSV sensor mounted onto a PCB with three SMA connectors for bias, standard output and fast output.	PK
6 mm Sensors				
MICROFJ−60035−TSV	35 μm (22,292)	6.07 × 6.07 mm	4-side tileable, chip scale package with through-silicon vias (TSV)	TR1, TR
MICROFJ−SMA−60035−GEVB			TSV sensor mounted onto a PCB with three SMA connectors for bias, standard output and fast output	PK
MICROFJ−SMTPA−60035−GEVB			TSV sensor mounted onto a pin adapter board	PK

9. The two-letter delivery option code should be appended to the order number, e.g.) to receive a MICROFJ−60035−TSV on tape and reel, use MICROFJ−60035−TSV−TR. The codes are as follows:
   PK = ESD Package
   TR1 = Tape
   TR = Tape and Reel

   There is a minimum order quantity (MOQ) of 3000 for the tape and reel (TR) option. Quantities less than this are available on tape (−TR1). The TR option is only available in multiples of the MOQ.

SensL is a registered trademark of Semiconductor Components Industries, LLC dba “**onsemi**” or its affiliates and/or subsidiaries in the United States and/or other countries.

Share Feedback
Your Opinion Matters

onsemi, onsemi, and other names, marks, and brands are registered and/or common law trademarks of Semiconductor Components Industries, LLC dba "**onsemi**" or its affiliates and/or subsidiaries in the United States and/or other countries. **onsemi** owns the rights to a number of patents, trademarks, copyrights, trade secrets, and other intellectual property. A listing of **onsemi**'s product/patent coverage may be accessed at www.onsemi.com/site/pdf/Patent−Marking.pdf. **onsemi** reserves the right to make changes at any time to any products or information herein, without notice. The information herein is provided "as−is" and **onsemi** makes no warranty, representation or guarantee regarding the accuracy of the information, product features, availability, functionality, or suitability of its products for any particular purpose, nor does **onsemi** assume any liability arising out of the application or use of any product or circuit, and specifically disclaims any and all liability, including without limitation special, consequential or incidental damages. Buyer is responsible for its products and applications using **onsemi** products, including compliance with all laws, regulations and safety requirements or standards, regardless of any support or applications information provided by **onsemi**. "Typical" parameters which may be provided in **onsemi** data sheets and/or specifications can and do vary in different applications and actual performance may vary over time. All operating parameters, including "Typicals" must be validated for each customer application by customer's technical experts. **onsemi** does not convey any license under any of its intellectual property rights nor the rights of others. **onsemi** products are not designed, intended, or authorized for use as a critical component in life support systems or any FDA Class 3 medical devices or medical devices with a same or similar classification in a foreign jurisdiction or any devices intended for implantation in the human body. Should Buyer purchase or use **onsemi** products for any such unintended or unauthorized application, Buyer shall indemnify and hold **onsemi** and its officers, employees, subsidiaries, affiliates, and distributors harmless against all claims, costs, damages, and expenses, and reasonable attorney fees arising out of, directly or indirectly, any claim of personal injury or death associated with such unintended or unauthorized use, even if such claim alleges that **onsemi** was negligent regarding the design or manufacture of the part. **onsemi** is an Equal Opportunity/Affirmative Action Employer. This literature is subject to all applicable copyright laws and is not for resale in any manner.

ADDITIONAL INFORMATION

TECHNICAL PUBLICATIONS:
Technical Library: www.onsemi.com/design/resources/technical−documentation
onsemi Website: www.onsemi.com

ONLINE SUPPORT: www.onsemi.com/support
For additional information, please contact your local Sales Representative at
www.onsemi.com/support/sales

Mouser Electronics

Authorized Distributor

Click to View Pricing, Inventory, Delivery & Lifecycle Information:

onsemi:

MICROFJ-SMA-30035-GEVB MICROFJ-SMTPA-60035-GEVB MICROFJ-SMTPA-30035-GEVB MICROFJ-SMA-30020-GEVB MICROFJ-SMA-40035-GEVB MICROFJ-SMA-60035-GEVB MICROFJ-SMTPA-30020-GEVB