REVISIONS			
REV	DESCRIPTION	DATE	APPROVED
C	RELEASE/CHANGE PER ECO-R213924	SEE AGILE	SEE AGILE

SOLIDWORKS DRAWING: ALL CHANGES MUST BE DONE IN SOLIDWORKS DATABASE.

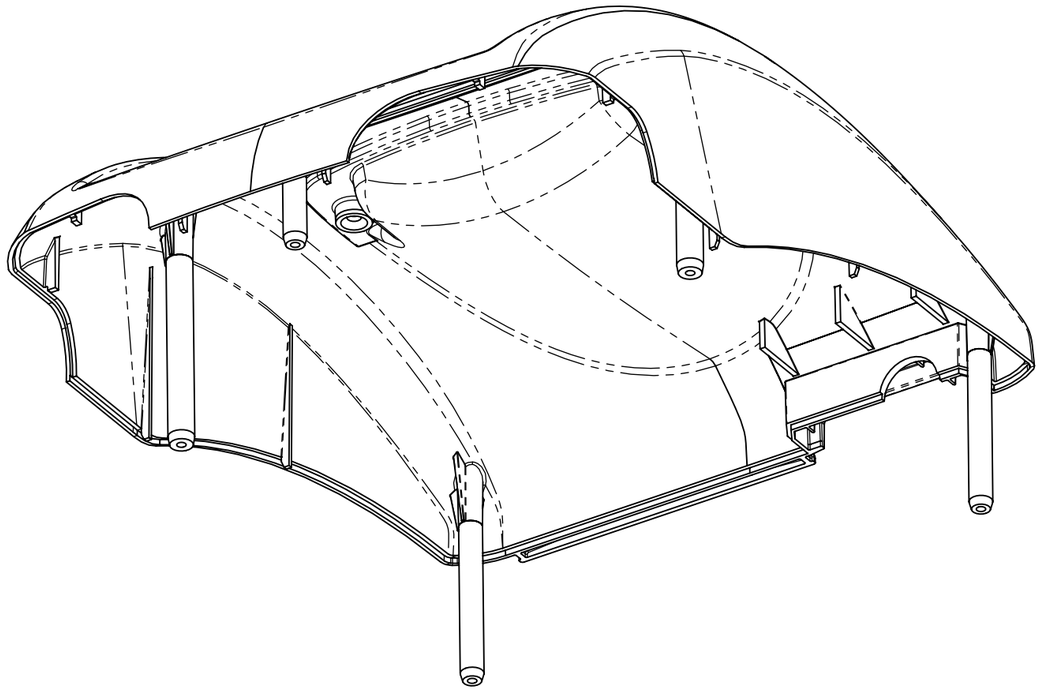

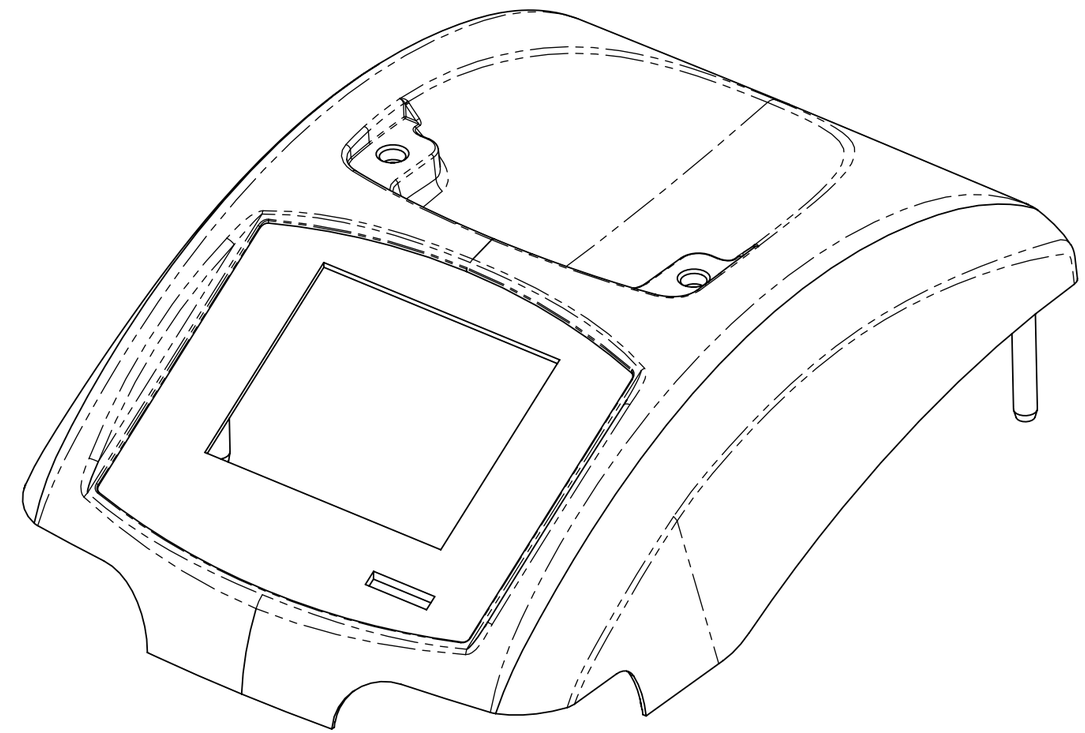

NOTES UNLESS OTHERWISE SPECIFIED:

1. APPLICABLE STANDARDS/SPECIFICATIONS:
   ASME Y14.3-2008, MULITVIEW AND SECTIONAL VIEW DRAWINGS.
   ASME Y14.4M-2007, PICTORIAL DRAWINGS.
   ASME Y14.5-2009, DIMENSIONS AND TOLERANCES.
   ASME Y14.38-2009, ABBREVIATIONS AND ACRONYMS.
2. ALL DIMENSIONS ARE IN MILLIMETERS.
3. MATERIAL: ABS POLYLAC PA 765; THROUGH COLOURED, RAL 9007.
4. PART DEFINITION IS PER 3808400 REV A WITH THE EXCEPTION OF THE MATERIAL USED.
5. PART MUST MEET THE P/N II019105 COSMETIC CRITERIA OF NELLCOR PURITAN BENNETT INSPECTION INSTRUCTION. COSMETICS TO MEET II019105 SECTION 3.0 PLASTIC FLAW GUIDELINES WITH THE EXCEPTION OF FLOW MARKS AND SINKS. THESE ITEMS WILL NOT BE INSPECTED TO THIS PROCEDURE.
6. CERTIFICATE OF COMPLIANCE REQUIRED, INCLUDING MATERIAL SPECIFICATION.
7. PART/COMPONENT TO BE ROHS COMPLIANT.

GENERAL DIMENSIONAL TOLERANCES			
DEC.	DEC.	DEC.	DEC.
X. +/-	.x +/-	.xx +/-	.xxx +/-
-	-	-	-
DEC.	HOLES	FRAC.	ANG.
.xxxx +/-	+/-	+/-	+/-
-	-	-	-

SCALE: N/A

DO NOT SCALE DRAWING

THIRD ANGLE PROJECTION

PROPRIETARY & CONFIDENTIAL. THIS DOCUMENT MAY NOT BE COPIED, DISCLOSED, OR USED IN WHOLE OR IN PART WITHOUT THE CONSENT OF COVIDIEN.

TITLE:

UPPER HOUSING RB0505

DRAWN:	[redacted]	DATE:	01JUN2006
CHECKED:	SEE AGILE	DATE:	SEE AGILE
APPROVED:	SEE AGILE	DATE:	SEE AGILE

COVIDIEN
6135 Gunbarrel Avenue
Boulder, CO 80301

© 2012 COVIDIEN ALL RIGHTS RESERVED.

SIZE: B

FILENAME: 3823600.SLDDRW

DRAWING NO.: 3823600

REV: C

SHEET: 1 OF 1