REVISIONS			
REV	DESCRIPTION	DATE	APPROVED
A	RELEASE/CHANGE PER ECO-R215345	SEE AGILE	SEE AGILE

SOLIDWORKS DRAWING: ALL CHANGES MUST BE DONE IN SOLIDWORKS DATABASE.

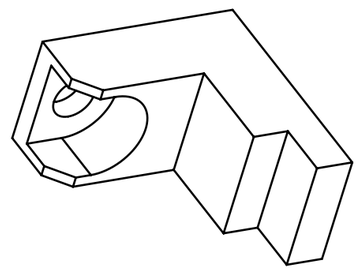

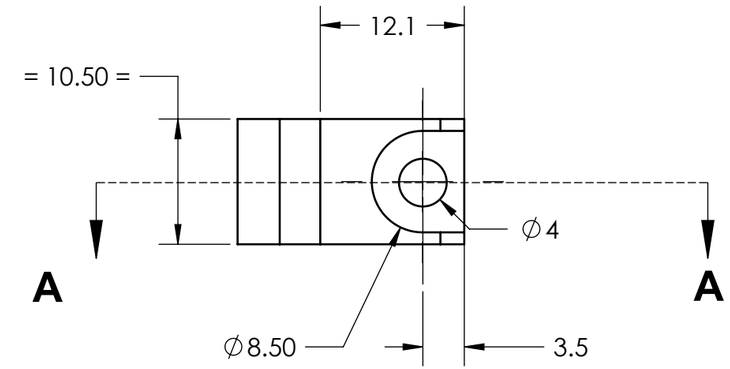

SECTION A-A

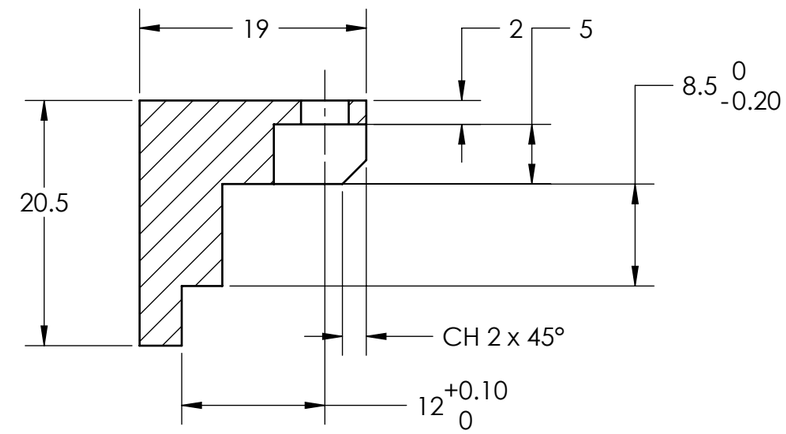

NOTES: SAUF INDICATION CONTRAIRE.

1. NORMES APPLICABLES ET SPÉCIFICATIONS:
   ASME Y14.3-2008, MULTIVIEW ET DESSINS VUE EN COUPE.
   ASME Y14.4M-2009, DESSINS ILLUSTREES.
   ASME Y14.5-2009, DIMENSIONS ET TOLERANCES.
   ASME Y14.38-2007, ABREVIATIONS ET ACRONYMES.
2. TOUTES LES DIMENSIONS SONT EN MILIMETRE.
3. PIÉCE USINÉE.
4. PAS DE BORDS TRANCHANTS, QUI FAIT PARTIE D'ÊTRE EXEMPT DE BAVURES.
5 PAS DE SURFACE RUGUEUSE.
6. MATÉRIEL: P.O.M BLANC.
7 POUR GENERAL ISO TOLÉRANCES REF 2768-MK.
8. PARTIE / COMPONENT DEVRONT ETRE CONFORME ROHS.

1. APPLICABLE STANDARDS/SPECIFICATIONS:
   ASME Y14.3-2008, MULTIVIEW AND SECTIONAL VIEW DRAWINGS.
   ASME Y14.4M-2009, PICTORIAL DRAWINGS.
   ASME Y14.5-2009, DIMENSIONS AND TOLERANCES.
   ASME Y14.38-2007, ABBREVIATION AND ACRONYMS.
2. ALL DIMENSIONS ARE IN MILLIMETER.
3. MACHINED PART.
4. NO SHARP EDGES, PART TO BE FREE OF BURRS.
5. NO ROUGH SURFACE.
6. MATERIAL: WHITE POLYOXYMETHYLENE.
7 FOR GENERAL TOLERANCES REF ISO 2768-MK.
8. PART/COMPONENT TO BE ROHS COMPLIANT.

GENERAL DIMENSIONAL TOLERANCES			
DEC. X. +/-	DEC. .x +/-	DEC. .xx +/-	DEC. .xxx +/-
7	7	7	7
DEC. .xxxx +/-	HOLES +/-	FRAC. +/-	ANG. +/-
7	7	7	7 °

SCALE: SCALE

DO NOT SCALE DRAWING

THIRD ANGLE PROJECTION

PROPRIETARY & CONFIDENTIAL. THIS DOCUMENT MAY NOT BE COPIED, DISCLOSED, OR USED IN WHOLE OR IN PART WITHOUT THE CONSENT OF COVIDIEN.

TITLE:

STOP COMMUTATION CARD

DRAWN:	[redacted]	DATE:	31MAR2003
CHECKED:	SEE AGILE	DATE:	SEE AGILE
APPROVED:	SEE AGILE	DATE:	SEE AGILE

COVIDIEN

6135 Gunbarrel Avenue
Boulder, CO 80301

© 2012 COVIDIEN ALL RIGHTS RESERVED.

SIZE: B

FILENAME: 3810200.SLDDRW

DRAWING NO.: 3810200

REV: A

SHEET: 1 OF 1