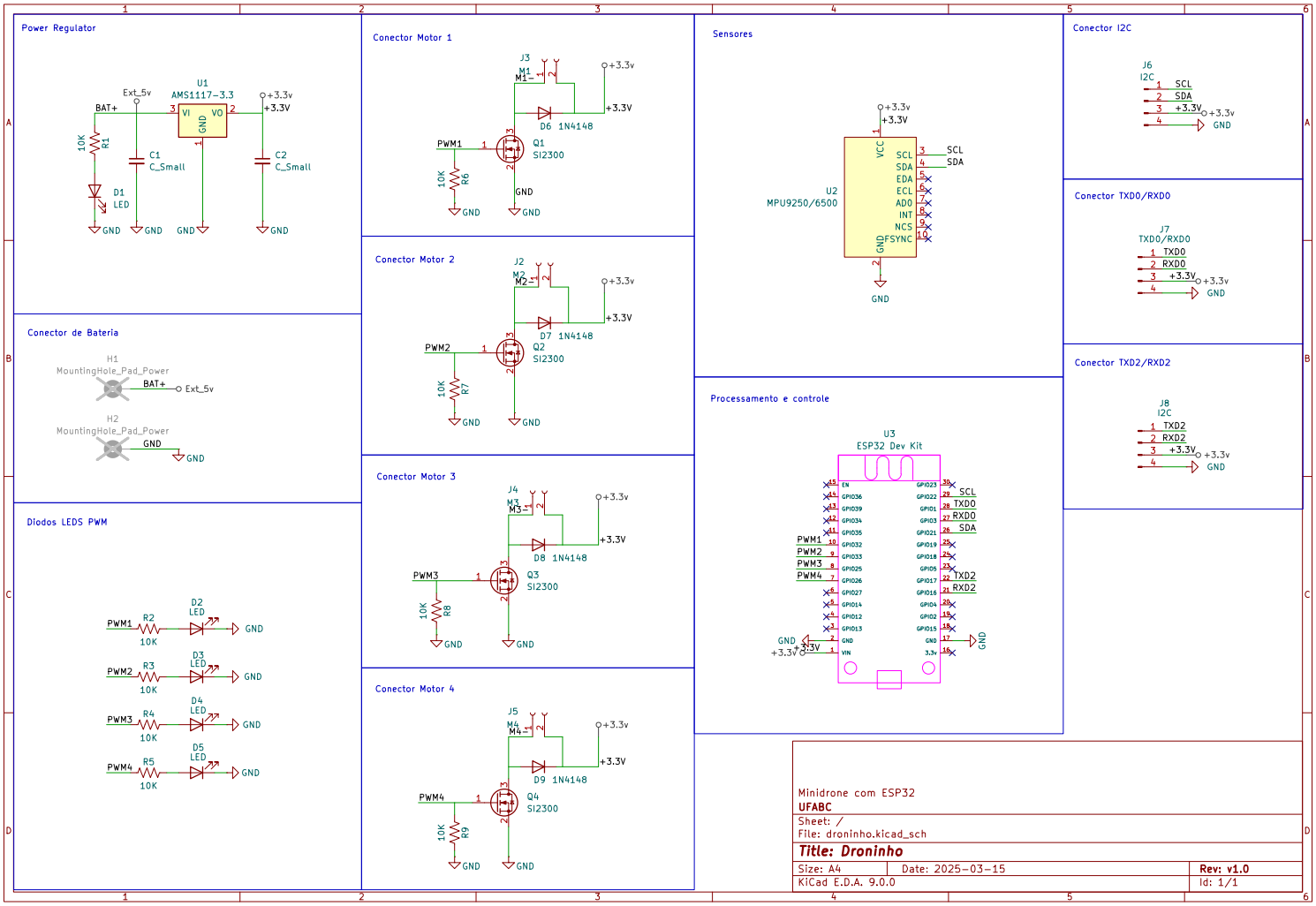
Power Regulator
U1
AMS1117-3.3
Ext_5v
BAT+
+3.3V
VI
VO
GND
R1
10K
C1
C_Small
C2
C_Small
D1
LED
Conector Motor 1
J3
M1
D6 1N4148
Q1
SI2300
PWM1
R6
10K
Conector Motor 2
J2
M2
D7 1N4148
Q2
SI2300
PWM2
R7
10K
Conector Motor 3
J4
M3
D8 1N4148
Q3
SI2300
PWM3
R8
10K
Conector Motor 4
J5
M4
D9 1N4148
Q4
SI2300
PWM4
R9
10K
Sensores
U2
MPU9250/6500
VCC
SCL
SDA
EDA
ECL
AD0
INT
NCS
FSYNC
Conector I2C
J6
I2C
Conector TXD0/RXD0
J7
TXD0/RXD0
TXD0
RXD0
Conector TXD2/RXD2
J8
I2C
TXD2
RXD2
Conector de Bateria
H1
MountingHole_Pad_Power
H2
MountingHole_Pad_Power
Processamento e controle
U3
ESP32 Dev Kit
Diodos LEDS PWM
D2
LED
D3
LED
D4
LED
D5
LED
R2
R3
R4
R5
10K
Minidrone com ESP32
UFABC
Sheet: /
File: droninho.kicad_sch
Title: Droninho
Size: A4
Date: 2025-03-15
KiCad E.D.A. 9.0.0
Rev: v1.0
Id: 1/1