555 Jungle Board

The 555 board has been developed to incorporate several functions onto one board to free bus slots and reduce power consumption. The following is a brief list of its support capabilities.

4K RAM / $DØØØ

4K RAM / $EØØØ

4 RS232 ports / address selectable

1 network 'NODE' interface / address selectable

NEC compatible interface (1)

Centronics compatible interface (1)

Additional capabilities include:

The 4 RS232 ports can be strapped to open collector.

The 1 Network Node can be strapped to differential pair.

The $DØØØ block of memory can be strapped for video smart terminals, Figure 4.

To assist in the assembly of the 555 with the desired functions, the overlay sheet has been broken down into function blocks. Use the following notes and the overlay sheet to assemble or modify the board.

BLOCK 'A': All of these parts must be installed on all assemblies with the exception: if no RAM is to be installed, delete U6F. Also refer to Figure 1.

BLOCK 'B': $DØØØ / 4K RAM

BLOCK 'C': $EØØØ / 4K RAM

BLOCK 'D': RS232 serial communications ports: always install U5E, U7H, R94, C3, C4, U3A, U4A. Block 'F' must be installed for baud rates.

Install as required:

#Ø = U2A,J3
#1 = U2B,J3
#2 = U2C,J3
#3 - U2D,J4

Refer to schematic for baud rate selection.
See Figure 5 for interrupt connections if required.
See Figure 2 for address selection.
See Figure 3 for converting to open collector scheme.

BLOCK 'E': Network Node interface open collector (#15):

Always install U5E, U3C, U7H, R94, U5D, U6A, U7A, R83, R81, R75, R77, J4

See Figure 5 for interrupt connections if required.
See Figure 2 for address selection.
Refer to schematic for differential pair interface.

BLOCK 'F': Baud rate generator: install as required.

BLOCK 'G': NEC compatible word processor printer interface (1).

BLOCK 'H': Centronic compatible printer interface (1)(2).

BLOCK 'I': Locations used to convert RS232 interfaces to open collector and (#15) to differential pair.

For single supply RS232 operation install PS1, C2, C3, C17, C18, C19. Cut W193 to W194 and jumper W194 to W195. Cut W196 to W197 and jumper W197 to W198.

(1) Both printer interfaces may reside on the board. If either or both are installed C1 and R22 and U7F must be installed. If NEC interface is installed R23 must be installed.

(2) If Centronics interface BLOCK 'H' is installed U7C, C16, R97, R96, C15 and R88 must be installed.

If it is desired to add magnetic tape backup to the system, one of two methods may be used.

Method One:

If the system does not require the use of port (3) as in 3 user or less systems, port (3) may be re-addressed to port (15) taking advantage of the unused RS232 driver/receiver ports. The tape backup unit would then be connected to port (3) Figure 8. Install U2D, remove U3C. Cut U2D.9 to U5E.14. Jumper U2D.9 to U5E.1. The ports should be addressed to $CEXX (Figure 2).

Method Two:

If the system uses ports (Ø-3) as in a 4 user system, then the RS232 driver/receiver may be implemented in the prototype area in BLOCK 'H'. Install U3C, delete U6A, U5D, U7A, U4B, U5A. Refer to Figure 7 for component wiring. Connect tape unit to port (15) Figure 8.

W11 MUST BE CUT IF $EØØØ RAM IS NOT REQUIRED
U7F MUST BE DELETED IF NEITHER PRINTER INTERFACE IS INSTALLED.

INSTALLATION	BLOCK	W5	W6	W7	W8	W9	W10	W11	W12	W13	W14	W15	W16	W17	W18	W19	W20
$DØØØ RAM	B						*										
$EØØØ RAM	C							*									
PORTS Ø - 3	D								*								*
OC PORT # 15	E								*								*
N.E.C. INT.	G	*								*							
CENT. INT.	H		*								*						
VIDEO SMART TERM	B-3D, 4C			*	*	*											

JUMPER WHERE INDICATED BY *
ALL OTHERS CONNECT TO +5v

FIGURE 1

PORT ADDRESS SELECTION

	ADDRESS	W2	W3	W4
W1	$CFXX	*		
	$CEXX		*	
	$CDXX			*

W1 IS CONNECTED TO W2 IN ARTWORK AND MUST BE CUT AND JUMPERED TO SELECT OTHER THAN $CFXX

FIGURE 2

TERMINAL	W47	W50	W88	W91	W53	W94	BAUD RATE	W94	BAUD RATE
CUT	W48	W52	W87	W92					
JUMPER	W49	W51	W89	W90	W97	W95	W96	W93	W53
TYPICAL									
SLAVE SYNCHRONOUS INSTALL R59, R65									
MASTER SYNCHRONOUS INSTALL U4B									
ASYNCHRONOUS									
INSTALL: U3B, U5B, U5C, R57, R63									

FIGURE 3

EXAMPLE: CONVERT # Ø FROM RS 232 TO OPEN COLLECTOR
CUTS MAY BE OMMITTED IF RS 232 DRIVER/RECEIVER
CAN BE REMOVED. U3A, U3B

RECONFIGURE 4K $DØØØ BLOCK
TO 3 SMART TERMINAL 1K BLOCKS

TERMINAL	W22	W23	W24
CUT	W26	W28	W3Ø
JUMPER	W27	W29	W31
$FØØØ – $F3FF			
$D8ØØ – $DAFF			
$C8ØØ – $CAFF			
INSTALL U6G			

FIGURE 4

POPULATE ALL OF BLOCK 'B'
EXCEPT: U3D, U4C

PORT INTERRUPT JUMPERS

TERMINAL	W116	W116	W116	W12Ø	W12Ø
JUMPER	W117	W118	W119	W121	W122
#Ø					
# 1					
# 2					
# 3					
# 15					
U1E AND R23 MUST BE INSTALLED					

FIGURE 5

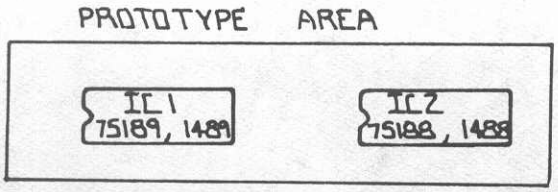

FIGURE 6

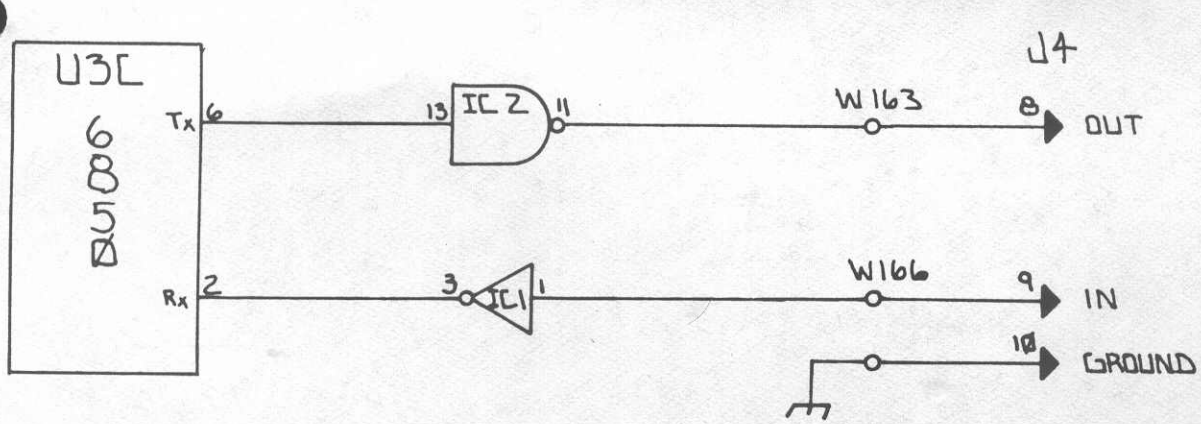

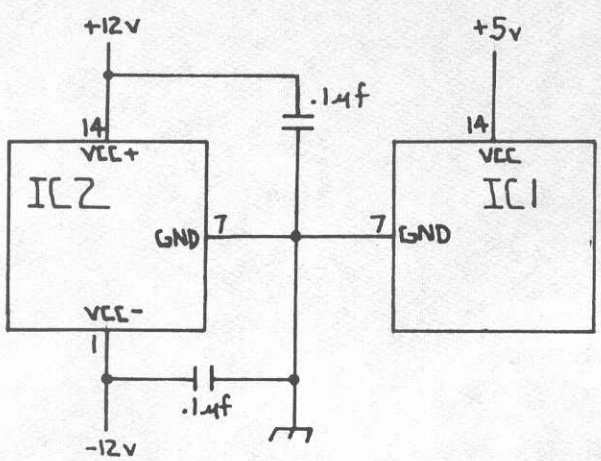

FIGURE 7

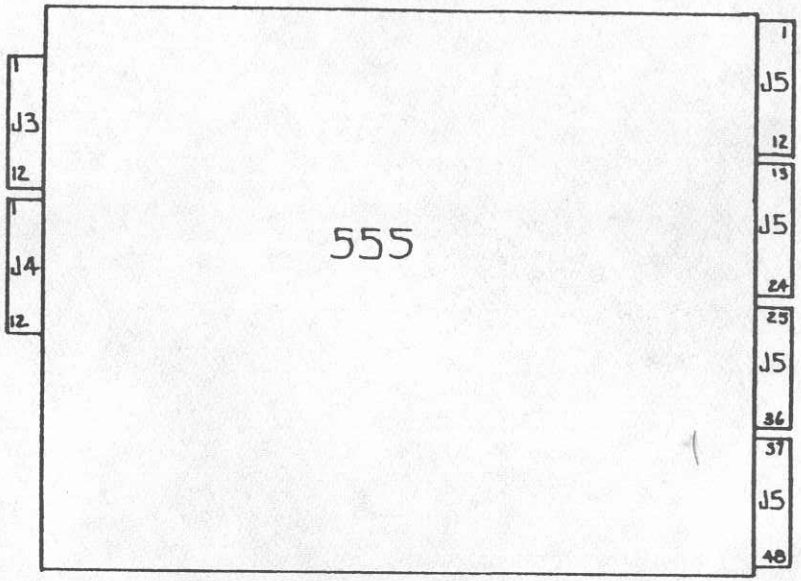

FIGURE 8

555

J3	RS 232 DUMB TERMINAL $CEXX (1)				
	PORT	GND	OUT	IN	CLOCK
	Ø	1	2	3	4 (3)
	1	5	6	7	8 (3)
	2	9	1Ø	11	12 (3)
J4	3	1	2	3	4 (3)
	NETWORK SLAVE $CFIE (2)				
	PORT	GND	IN	OUT	CLOCK
	15	1Ø	9	8	11(4)

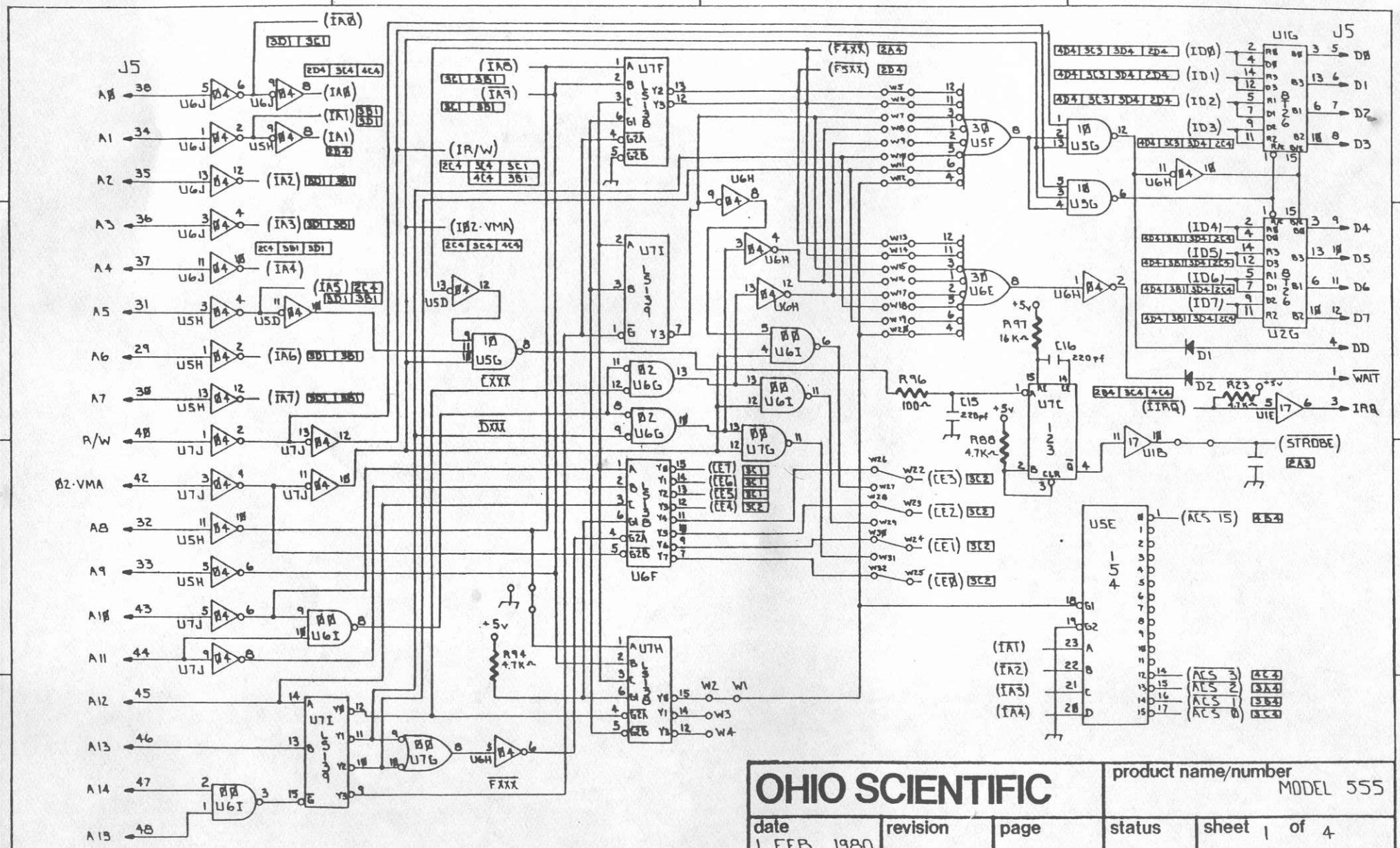

OHIO SCIENTIFIC			product name/number MODEL 555	
date 1 FEB 1980	revision	page	status	sheet 1 of 4

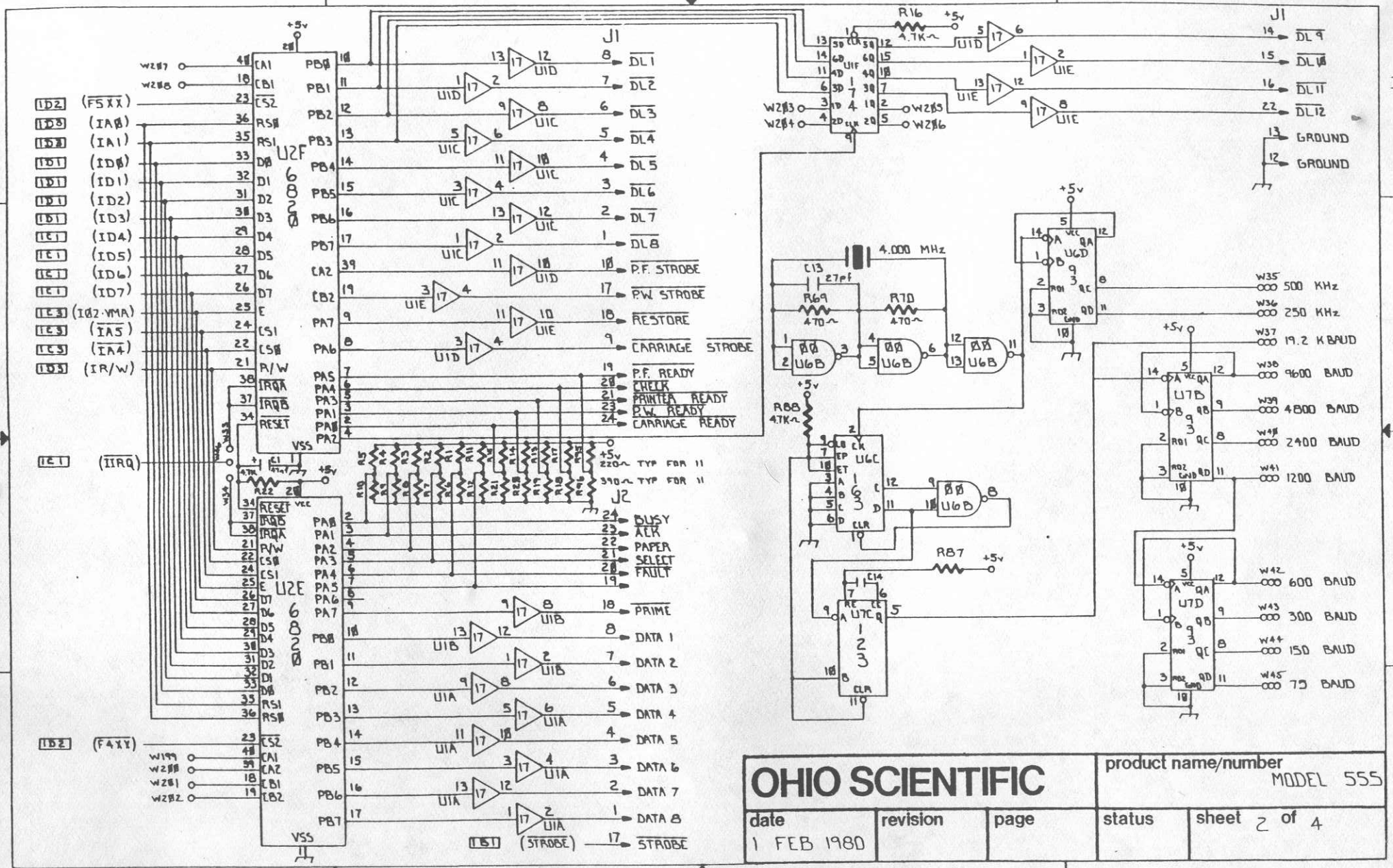

OHIO SCIENTIFIC			product name/number MODEL 555	
date 1 FEB 1980	revision	page	status	sheet 2 of 4

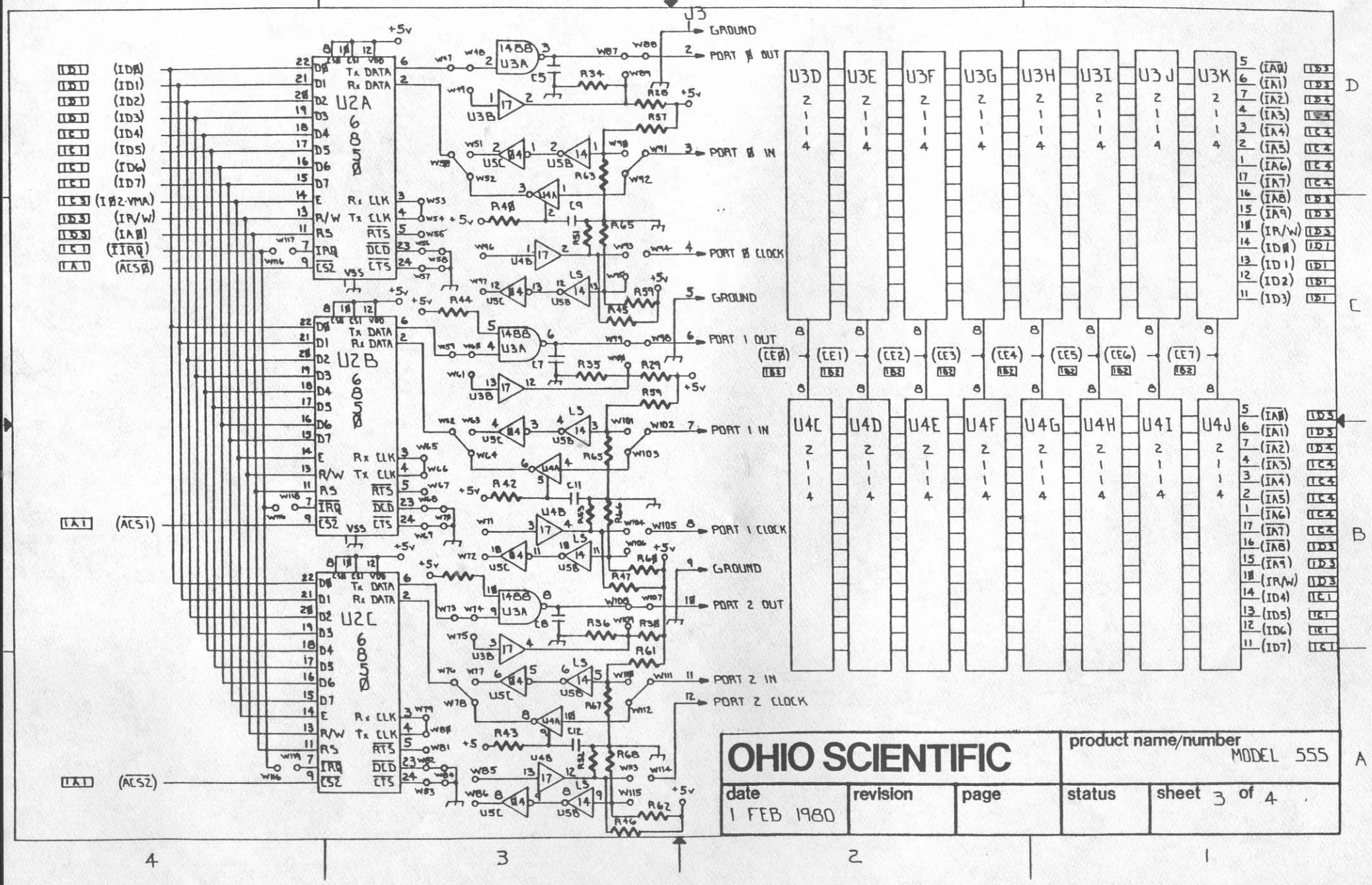

OHIO SCIENTIFIC			product name/number MODEL 555	
date 1 FEB 1980	revision	page	status	sheet 3 of 4

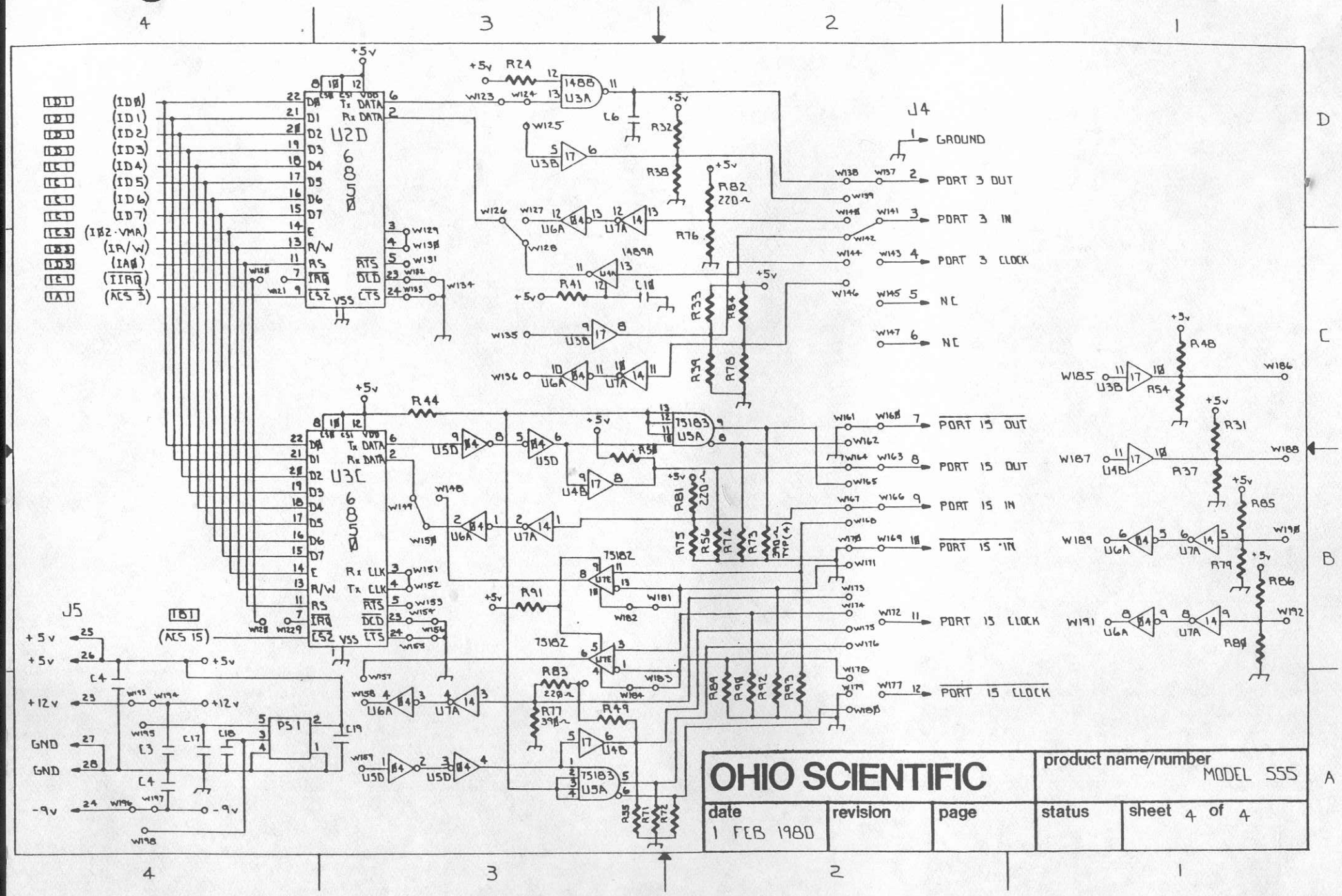

OHIO SCIENTIFIC			product name/number MODEL 555	
date 1 FEB 1980	revision	page	status	sheet 4 of 4

NOTE - ALL UNMARKED CAPACITORS ARE .1uf BYPASS
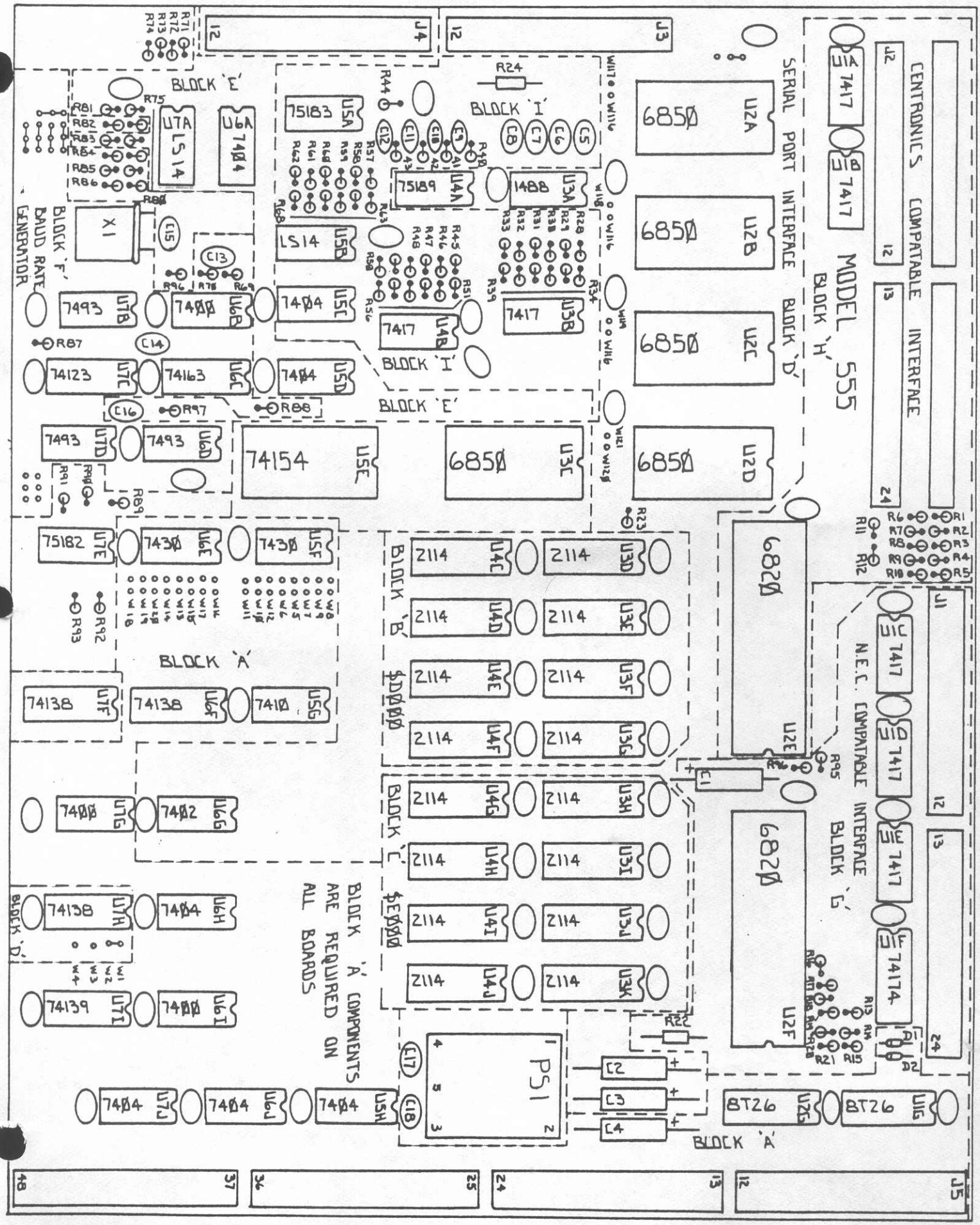
NOTE ~ ALL UNMARKED CAPACITORS ARE .1uf BYPASS