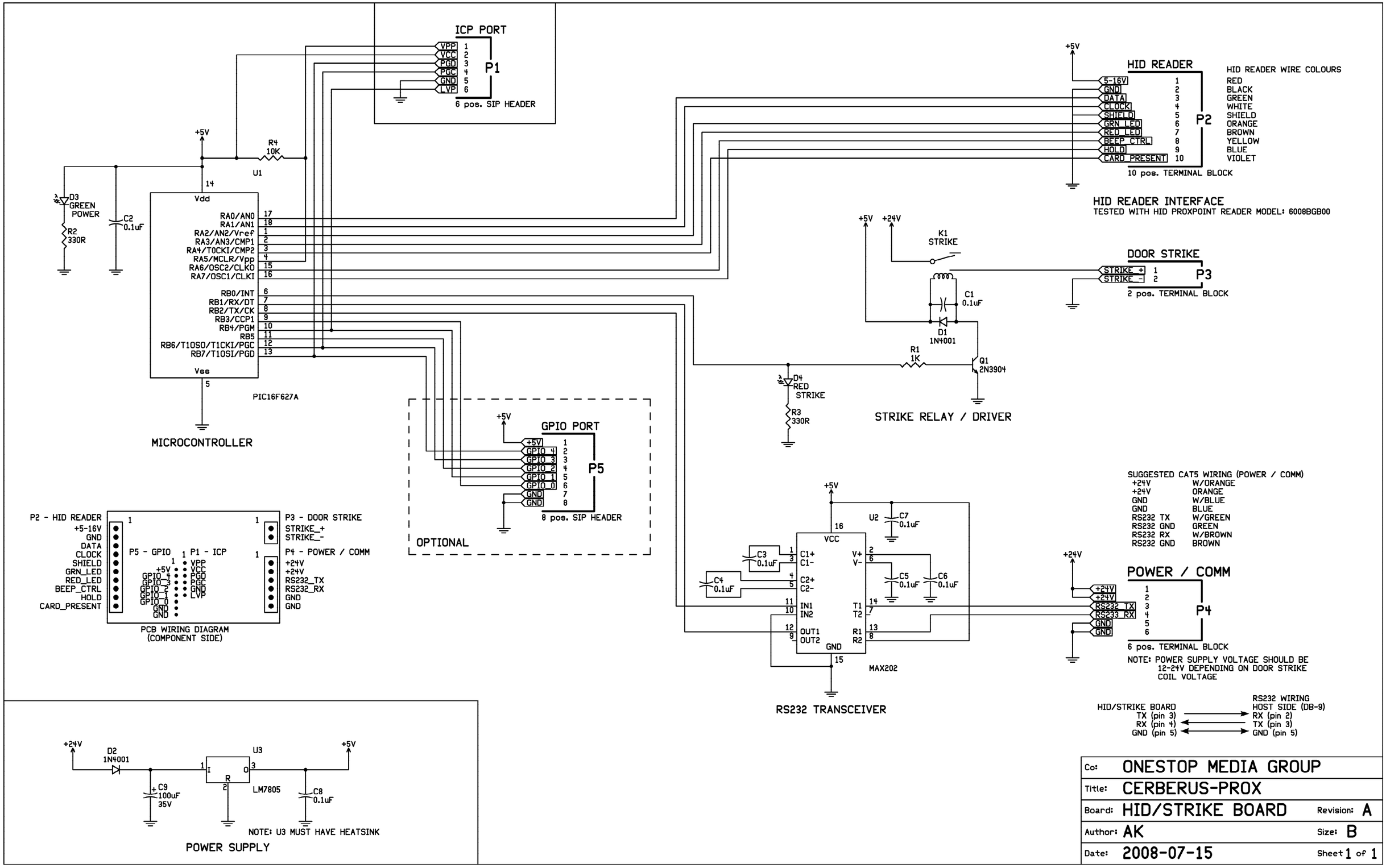
ICP PORT
VPP 1
VCC 2
PGD 3
PGC 4
GND 5
LVP 6
P1
6 pos. SIP HEADER
+5V
R4
10K
U1
14
Vdd
D3
GREEN
POWER
R2
330R
C2
0.1uF
RA0/AN0 17
RA1/AN1 18
RA2/AN2/Vref 1
RA3/AN3/CMP1 2
RA4/T0CKI/CMP2 3
RA5/MCLR/Vpp 4
RA6/OSC2/CLKO 15
RA7/OSC1/CLKI 16
RB0/INT 6
RB1/RX/DT 7
RB2/TX/CK 8
RB3/CCP1 9
RB4/PGM 10
RB5 11
RB6/T1OSO/T1CKI/PGC 12
RB7/T1OSI/PGD 13
Vss
5
PIC16F627A
MICROCONTROLLER
HID READER
5-16V 1
GND 2
DATA 3
CLOCK 4
SHIELD 5
GRN_LED 6
RED_LED 7
BEEP_CTRL 8
HOLD 9
CARD_PRESENT 10
P2
10 pos. TERMINAL BLOCK
HID READER WIRE COLOURS
RED
BLACK
GREEN
WHITE
SHIELD
ORANGE
BROWN
YELLOW
BLUE
VIOLET
HID READER INTERFACE
TESTED WITH HID PROXPOINT READER MODEL: 6008BGB00
+5V +24V
K1
STRIKE
C1
0.1uF
D1
1N4001
R1
1K
Q1
2N3904
D4
RED
STRIKE
R3
330R
STRIKE RELAY / DRIVER
DOOR STRIKE
STRIKE_+ 1
STRIKE_- 2
P3
2 pos. TERMINAL BLOCK
+5V
GPIO PORT
+5V 1
GPIO_4 2
GPIO_3 3
GPIO_2 4
GPIO_1 5
GPIO_0 6
GND 7
GND 8
P5
8 pos. SIP HEADER
OPTIONAL
P2 - HID READER
+5-16V
GND
DATA
CLOCK
SHIELD
GRN_LED
RED_LED
BEEP_CTRL
HOLD
CARD_PRESENT
P5 - GPIO
+5V
GPIO_4
GPIO_3
GPIO_2
GPIO_1
GPIO_0
GND
GND
P1 - ICP
VPP
VCC
PGD
PGC
GND
LVP
P3 - DOOR STRIKE
STRIKE_+
STRIKE_-
P4 - POWER / COMM
+24V
+24V
RS232_TX
RS232_RX
GND
GND
PCB WIRING DIAGRAM
(COMPONENT SIDE)
+5V
U2
C7
0.1uF
VCC
C3
0.1uF
C4
0.1uF
C1+
C1-
C2+
C2-
IN1
IN2
OUT1
OUT2
V+
V-
T1
T2
R1
R2
GND
C5
0.1uF
C6
0.1uF
MAX202
RS232 TRANSCEIVER
SUGGESTED CAT5 WIRING (POWER / COMM)
+24V W/ORANGE
+24V ORANGE
GND W/BLUE
GND BLUE
RS232 TX W/GREEN
RS232 GND GREEN
RS232 RX W/BROWN
RS232 GND BROWN
+24V
POWER / COMM
+24V 1
+24V 2
RS232_TX 3
RS233_RX 4
GND 5
GND 6
P4
6 pos. TERMINAL BLOCK
NOTE: POWER SUPPLY VOLTAGE SHOULD BE
12-24V DEPENDING ON DOOR STRIKE
COIL VOLTAGE
HID/STRIKE BOARD
TX (pin 3)
RX (pin 4)
GND (pin 5)
RS232 WIRING
HOST SIDE (DB-9)
RX (pin 2)
TX (pin 3)
GND (pin 5)
+24V
D2
1N4001
C9
100uF
35V
U3
I
O
R
LM7805
C8
0.1uF
+5V
NOTE: U3 MUST HAVE HEATSINK
POWER SUPPLY
Co: ONESTOP MEDIA GROUP
Title: CERBERUS-PROX
Board: HID/STRIKE BOARD
Revision: A
Author: AK
Size: B
Date: 2008-07-15
Sheet 1 of 1