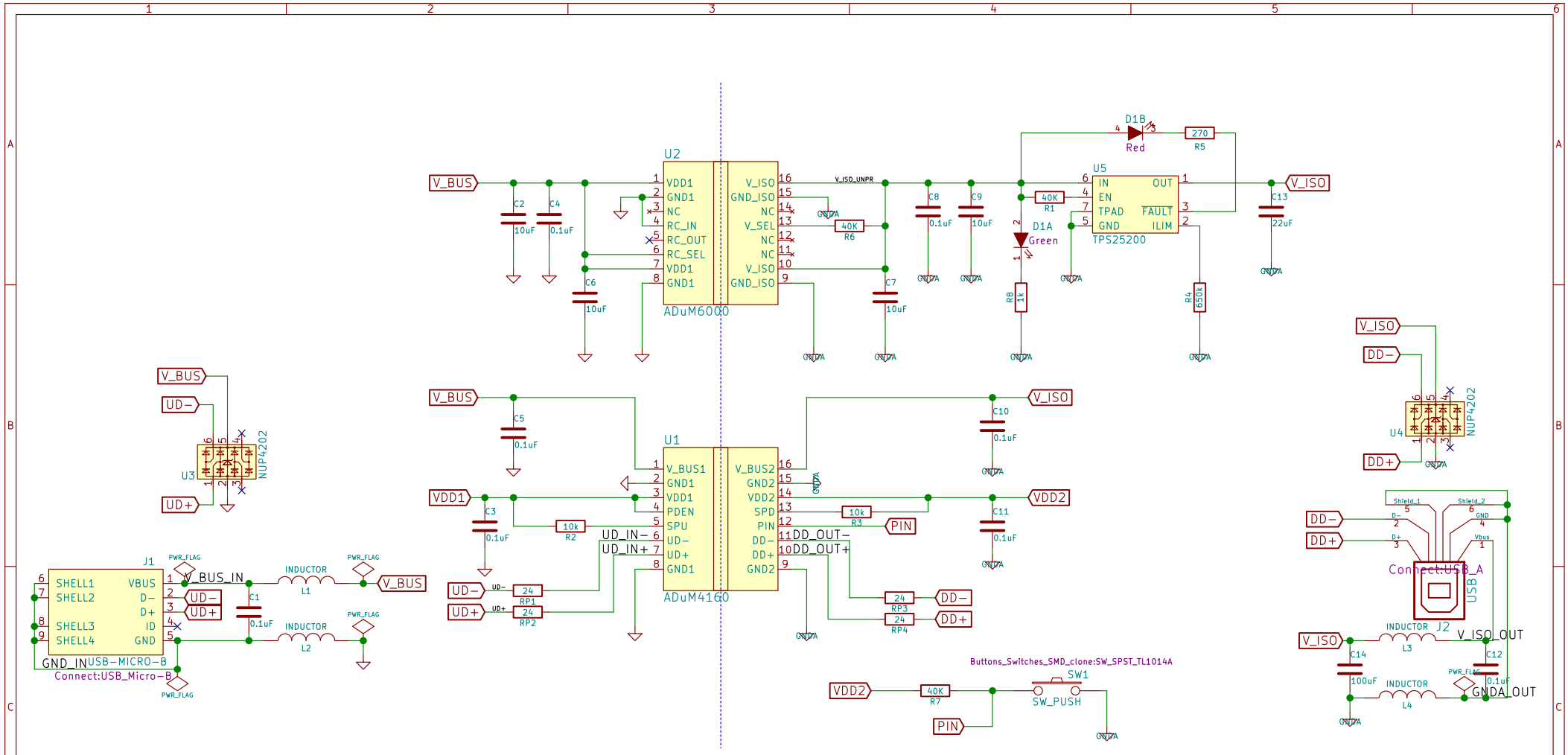

NOTE:
1. NUP2202 can be used insted NUP4202
2. LED D1:
   GREEN -- Power OK
   RED -- Overcurrent

Sheet: /
File: usb_isolator.sch

Title: USB isolator

Size: A4	Date: 2015-04-28	Rev: B
KiCad E.D.A. kicad (after 2015-mar-04 BZR unknown)-product		Id: 1/1