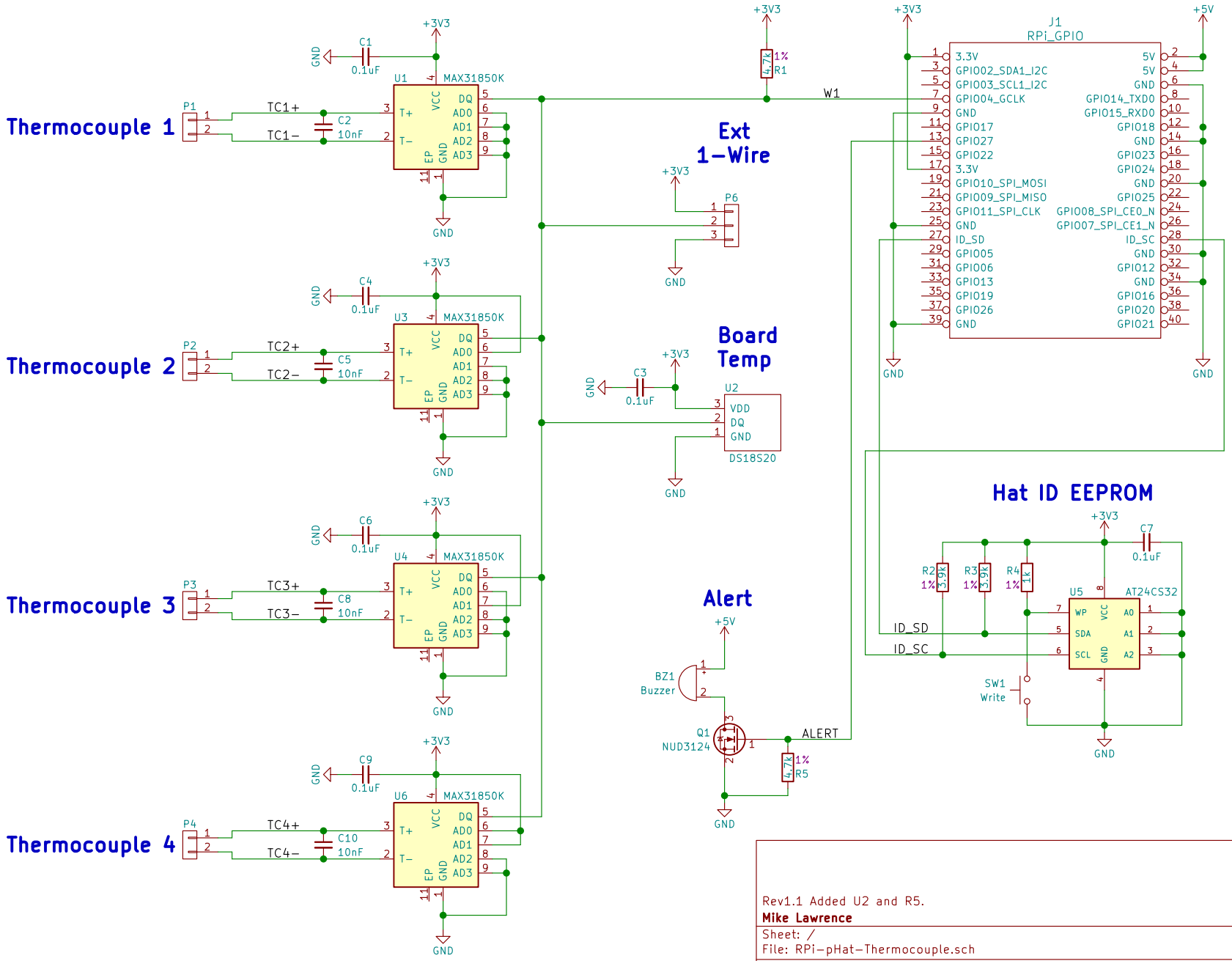

Rev1.1 Added U2 and R5.

Mike Lawrence

Sheet: /

File: RPi-pHat-Thermocouple.sch

Title: Raspberry Pi Zero Thermocouple pHat

Size: A	Date: March 2017	**Rev: 1.1**
KiCad E.D.A. kicad 4.0.5		Id: 1/1