RTC Pin Requirements
Vcc
GND
SDA
SCL

Piezo Pin Requirements
x1 PWM
GND

RGB LED
x3 PWM
GND

L293D Motor Driver
5V logic pwoer
13V motor power
x1 Digital (Enable)
x1 Digital (Input)
GND

Buttons (left, right, select, snooze)
x4 Digital I/O

16x2 LCD
x6 I/O
x3 5V
x3 GND
x1 Backlight analog

Rariable Resistor
x1 Analog

I2C Pins
A4 SDA
A5 SCL

Available PWM Pins
D3
D5
D6
D9
D10
D11

4 User Usable Buttons
Arduino Pins with pull-ups

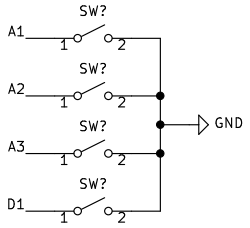

Buzzer

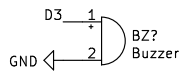

RTC Breakout board

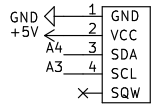

Arduino Nano

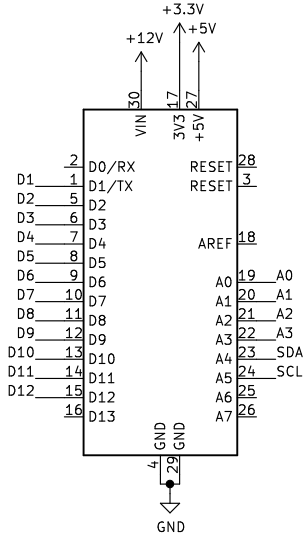

Pot(entiometer)

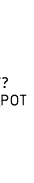

RGB LED

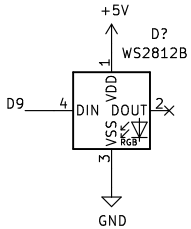

Motor Driver

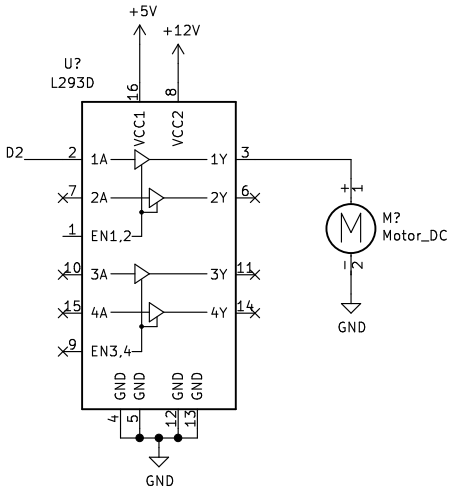

4 digit 7 segment display

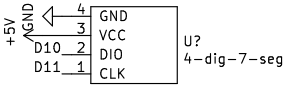

16x2 Char LCD

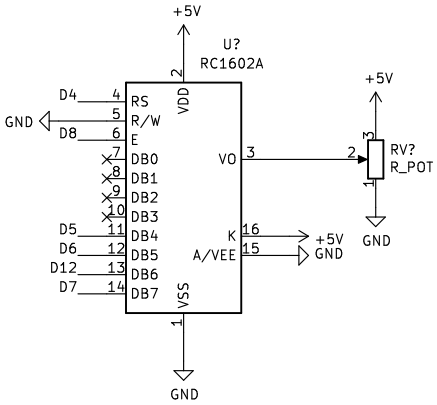

Sheet: /
File: Schematics for board.sch

Title:

Size: A4	Date:	**Rev:**
KiCad E.D.A. kicad (5.1.4)-1		Id: 1/1