Spiral of Silence in Recommender Systems

Dugang Liu, Chen Lin, Zhilin Zhang, Yanghua Xiao, Hanghang Tong

Contributions

Recommendation with Non-random Missing Data

1

Study Missing Mechanism

- Verify the existence of spiral of silence

missing ratings v.s. opinion climate

- Reveal factors that affect formation of spiral process

Hardcore users remain at steady state

2

Develop recommendation models

- Generate ratings -> show ratings relate missing ratings to opinion climate
- Incorporate hardcore users

Hardcore persona affects missing possibility

Motivations

Data Studied in Recommender Systems

Observed Rating Matrix → Missing Not At Random → **True Rating Matrix**

	Aliens	Ben-Hur	Casino	Dangal	Eskiya
Alice		3		3	
Bob	5	3		2	2
Clare	5	4		1	2
Diane	2	2		2	5
Elle	5			4	2

Predict

False nearest neighbor

Response Matrix

	Aliens	Ben-Hur	Casino	Dangal	Eskiya
Alice	0	1	0	1	0
Bob	1	1	0	1	1
Clare	1	1	1	1	1
Diane	1	1	0	1	1
Elle	1	0	1	1	1

	Aliens	Ben-Hur	Casino	Dangal	Eskiya
Alice	2	3		3	5
Bob	5	3		2	2
Clare	5	4		1	2
Diane	2	2		2	5
Elle	5	1		4	2

True nearest neighbor

- Previous Missing Not At Random(MNAR) models
  - CPT-v, Logit-vd (Marlin@WWW'09)
  - RAPMF(Yang@TKDE'15)
  - MF-MNAR (Hernández-Lobato@ICML '14)
- We still lack understanding of missing response mechanisms

Background: Spiral of Silence

- Spiral of Silence Theory (Noelle-Neumann@JCom1974)
- Explains how public opinions are formed and how they spread
  - Individuals observe opinion climate
  - Majority opinion holder
    - More willing to voice out
  - Minority opinion holder
    - More likely to remain silent
  - Spiral process
    - Until only hardcore users stick to minority opinion

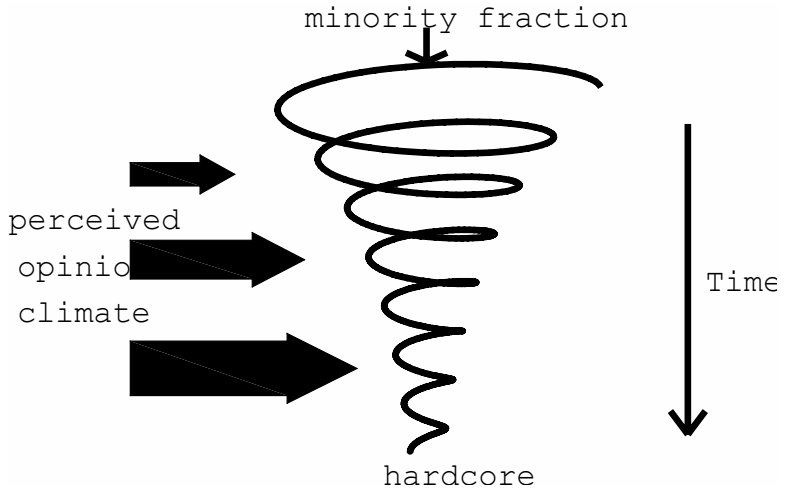

- One of the most influential theories of public opinion formation

Part I: Existence of Spiral of Silence

Previous empirical study (Train Test)

Limitations

Participants are asked: “are you willing to discuss with a stranger on a train about this topic?”

- Lab environment — Hypothetical willingness
- Climate v.s. Willingness Correlation — Static Correlation

This work: real data sets — Actual willingness

Scenario I: Actual willingness explicitly provided

Scenario II: Actual willingness **not** explicitly provided

Are the majority opinion holders more likely to show their opinions?

Does the probability increase over time for majority opinion holders?

Dynamic Spiral Process

Existence of Spiral of Silence: Scenario 1

- Actual willingness explicitly provided
- Data set: Extended Epinions

Dataset	#Users	#Items	#Ratings
Epinions	120,492	755,760	13,668,320

- Each record
  - User id
  - Item id
  - Time stamp
  - Rating Value
  - Rating status: rating displayed or hidden

Existence of Spiral of Silence: Scenario 1

- Actual willingness explicitly provided
- Set of majority opinion ratings M_a
- Set of minority opinion ratings M_i
- Set of displayed ratings V
- Possibility to show a rating in majority opinion

$$p = \frac{|M_a \cap V|}{|M_a|}$$

- Possibility to show a rating in minority opinion

$$q = \frac{|M_i \cap V|}{|M_i|}$$

- Change of p in the spiral process

$$p\ change\ = p_T - p_1$$

- Change of q in the spiral process

$$q\ change = q_T - q_1$$

Hypothesis 1: A majority opinion holder has a larger possibility to show the rating than a minority opinion holder. Static √

Two approaches to identify M_a

Methodology	p	q
Threshold-based	0.5772	0.3715
Model-based	0.6094	0.2616

$p > q$

Hypothesis 2: As the majority opinion becomes more dominant, the tendency for a majority opinion holder to show the rating is on the rise, while the tendency for a minority opinion holder to show the rating is on the decline. Dynamic √

Positive p change, negative q change

Threshold-based approach							
K=♯snapshot	4	5	6	7	8	9	10
P change	0.284	0.309	0.329	0.343	0.352	0.357	0.361
q change	-0.206	-0.199	-0.195	-0.178	-0.178	-0.170	-0.165
Model-based approach							
K=♯snapshot	4	5	6	7	8	9	10
P change	0.343	0.366	0.377	0.394	0.401	0.405	0.407
q change	-0.249	-0.251	-0.235	-0.235	-0.226	-0.223	-0.218

Case Study

In the beginning, the possibility to show ratings for majority opinion holders rises slowly

Turning point:

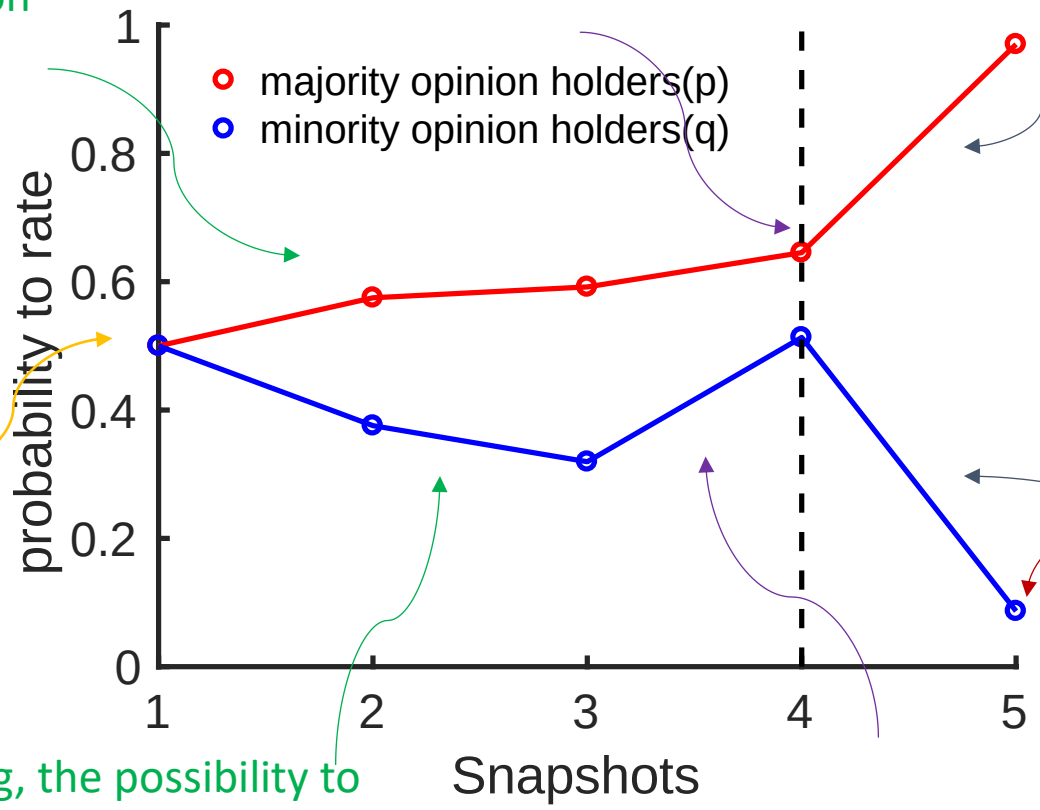

A strong majority opinion encourages majority opinion holders to express

Hard cores remain

Starting point: Equal

Dominance of majority opinion formed, minority opinion holders are pushed back

In the beginning, the possibility to show ratings for minority opinion holders shrinks slowly

Minority opinion holders are arguing in defiance

Existence of Spiral of Silence: Scenario II

- Actual willingness NOT explicitly provided
- MK test on sequence $< M_a(j)_1, \ldots M_a(j)_T >$ for item j
  $M_a(j)_t$ percentage of majority opinion
- 8 Data sets
  - 4 Amazon data sets
- Divide items to two groups
  - Kurtosis

$$k = \frac{E[(x_j - \mu)^4]}{\sigma\text{^}4} - 3$$

  - Items with dominant majority opinion
    $k \geq 0$
  - Items without dominant majority opinion
    $k < 0$

Significance level	< 0.01		≤ 0.05		≤ 0.1	
Dataset	$k \geq 0$	$k < 0$	$k \geq 0$	$k < 0$	$k \geq 0$	$k < 0$
books	99.57	6.80	99.62	9.50	99.76	11.55
clothes	99.73	7.09	99.84	9.85	99.92	12.29
electronics	99.56	5.31	99.67	7.64	99.75	9.35
movies	99.42	8.70	99.62	11.78	99.76	13.96
Epinions	97.04	3.27	97.63	4.75	98.12	6.54
Ciao	98.24	12.82	98.24	15.38	98.82	16.67
Movielens20M	68.53	8.57	70.32	10.41	71.41	11.36
Eachmovie	93.31	10.09	94.14	11.23	94.56	12.26

For items with dominant majority opinion, the proportion of majority opinion holders in population is monotonically increasing overtime until it reaches a stable status

If the item has no dominant majority opinion, the proportion of its plurality opinion is unlikely to monotonically increase overtime

Part II: Formation of Spiral of Silence

- Hardcore users
  - For user i, $h_i = \frac{n_i^h}{n_i}$, n_i^h number of high divergent ratings, n_i number of all ratings
- Hardcore is a personality
  - Yahoo! User, a "traditional" recommendation data set
  - Yahoo! Random, a user "must" rate 10 randomly chosen items
  - Same group of users in the two data sets
  - Baseline: uniformly sample hardcore users from two sets
  - Mann-Whitney U test with significance level p≤0.05
- Hardcore is Related to Personal Interest
  - 4 data sets with tags
  - Median h_i
  - Mann-Whitney U test with significance level p≤0.01

Users	Non-hardcore	Hardcore			
Threshold	H<0.5	H≥0.5	H≥0.6	H≥0.7	H≥0.8
Actual	0.2016	0.1748**	0.0684**	0.0413**	0.0377**
Baseline	0.2272	0.1184	0.0304	0.0109	0.0075

Hardcore users are identical in two datasets.

Dataset	Most rated tag	Least rated tag
Epinions	0.1071***	0
Ciao	0.0476***	0
Movielens	0.0625***	0
Eachmovie	0.1250***	0

Under the most rated tag, a user has a higher hardcore score h.

Part III: Model **M**issing **C**onditional on **P**ersona

- Pre-rating stage
  - Generate user preferences $U_i \sim \mathcal{N}(0, \sigma_u^2)$
  - Generate item features $V_j \sim \mathcal{N}(0, \sigma_v^2)$
  - Generate biases $BU_i, BV_j \sim \mathcal{N}(0, \sigma_b^2)$
- Rating stage -> Rating matrix
  - Generate a rating $X_{ij} \sim \mathcal{N}\left(U_i V_j + BU_i + BV_j, \sigma_x^2\right)$
- Post-rating stage -> Response matrix
  - Pick a hardcore persona
    - $\beta \sim Beta(\xi_a, \xi_b), \pi_i \sim Bern(\beta)$
  - Perceive opinion climate E_{ij}
  - Give response
    - $p\left(R_{ij} = 1 \middle| X_{ij}, E_{ij}, \pi_i, \tau\right) = \prod_{z=0}^{z=1} \frac{1}{\exp(\tau_z |X_{ij} - E_{ij}|)^{\pi_{i,z}}}$

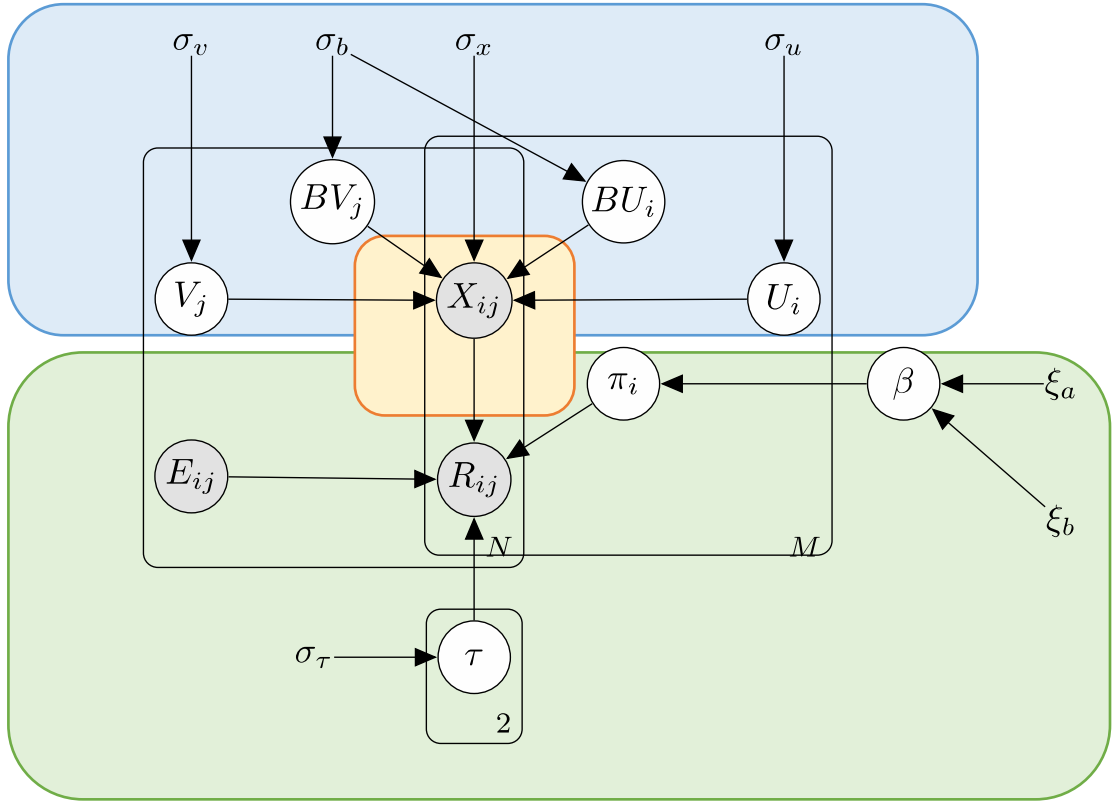

Part IV: Experiment

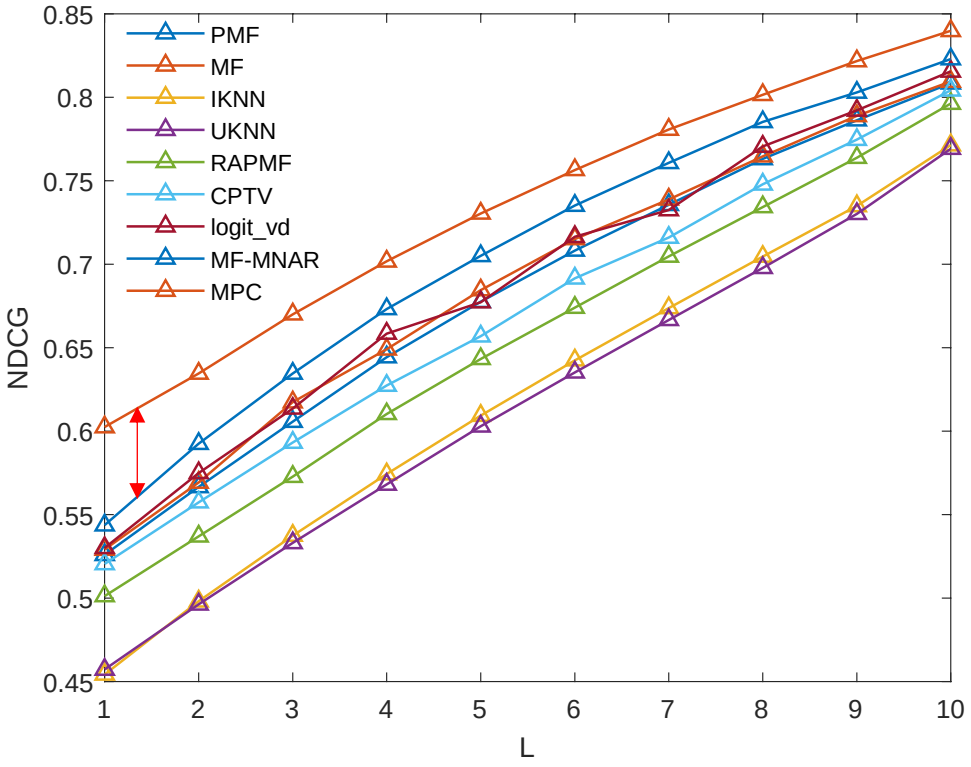

- Dataset
  - Yahoo!random
- Evaluation
  - NDCG
- Comparative Method
  - MAR models
    - PMF, MF, IKNN, UKNN
  - MNAR models
    - CPT-v, Logit-vd (Marlin@WWW'09)
    - RAPMF(Yang@TKDE'15)
    - MF-MNAR (Hernández-Lobato@ICML '14)

Conclusion

- In recommendation systems, ratings are missing not at random
  - Users are more likely to show ratings if they confirm to the majority opinion
  - Hardcore users are more likely to give divergent ratings
  - Incorporate perceived majority opinion and hardcore persona to improve recommendation performance

- Codes and slides are available at
  - https://github.com/dgliu/WSDM19_Spiral