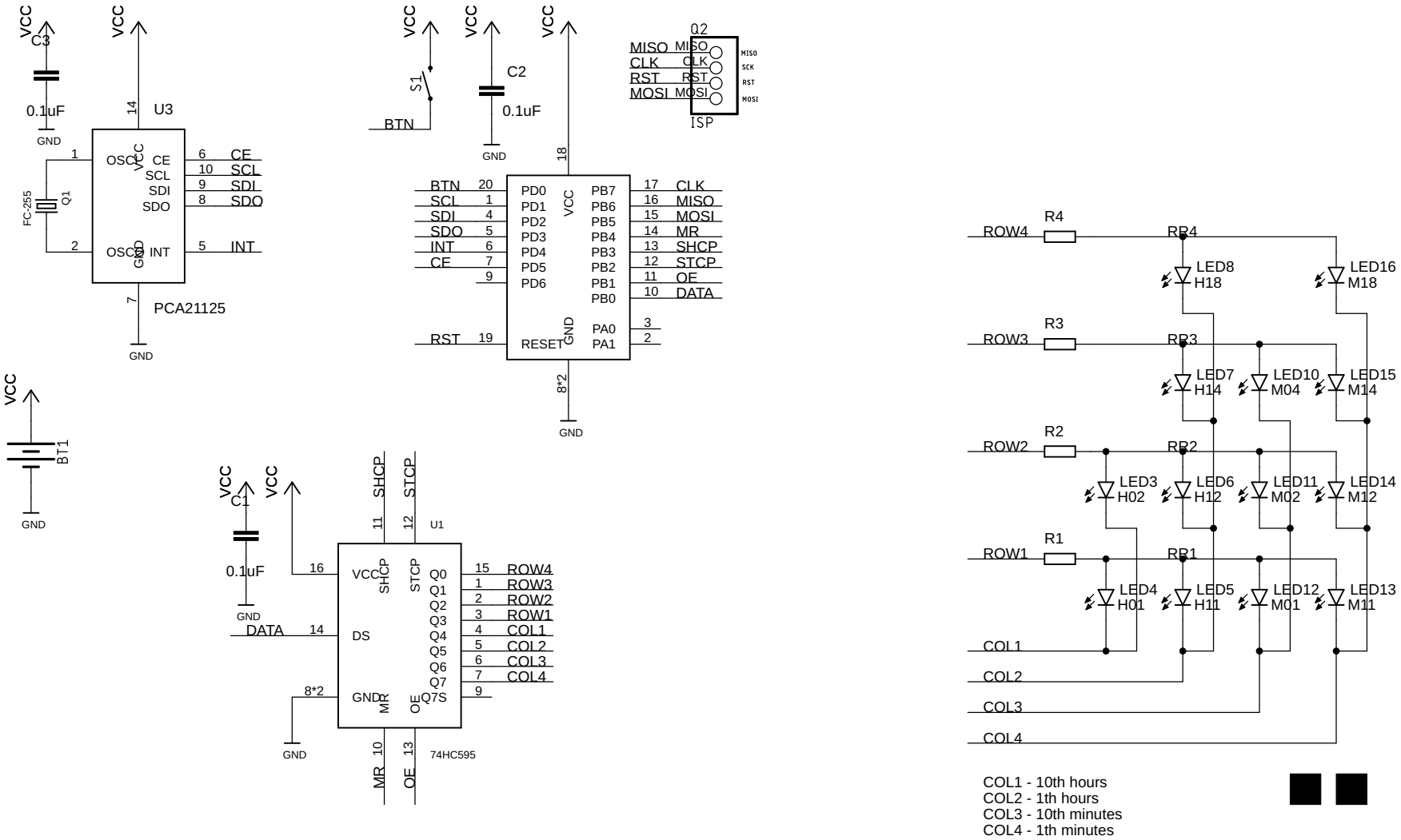
VCC
C3
0.1uF
GND
U3
14
1
OSCI
VCC
CE
SCL
SDI
SDO
6 CE
10 SCL
9 SDI
8 SDO
FC-255
Q1
2
OSCO
GND
INT
5 INT
7
PCA21125
S1
BTN
C2
0.1uF
18
Q2
MISO MISO
CLK CLK
RST RST
MOSI MOSI
ISP
BTN 20
SCL 1
SDI 4
SDO 5
INT 6
CE 7
9
PD0
PD1
PD2
PD3
PD4
PD5
PD6
PB7
PB6
PB5
PB4
PB3
PB2
PB1
PB0
17 CLK
16 MISO
15 MOSI
14 MR
13 SHCP
12 STCP
11 OE
10 DATA
RST 19
RESET
PA0
PA1
3
2
8*2
BT1
C1
SHCP 11
STCP 12
U1
16
DATA 14
DS
Q0
Q1
Q2
Q3
Q4
Q5
Q6
Q7
Q7S
15 ROW4
1 ROW3
2 ROW2
3 ROW1
4 COL1
5 COL2
6 COL3
7 COL4
9
GND
MR 10
OE 13
74HC595
R4
ROW4
RP4
LED8
H18
LED16
M18
R3
ROW3
RP3
LED7
H14
LED10
M04
LED15
M14
R2
ROW2
RP2
LED3
H02
LED6
H12
LED11
M02
LED14
M12
R1
ROW1
RP1
LED4
H01
LED5
H11
LED12
M01
LED13
M11
COL1
COL2
COL3
COL4
COL1 - 10th hours
COL2 - 1th hours
COL3 - 10th minutes
COL4 - 1th minutes