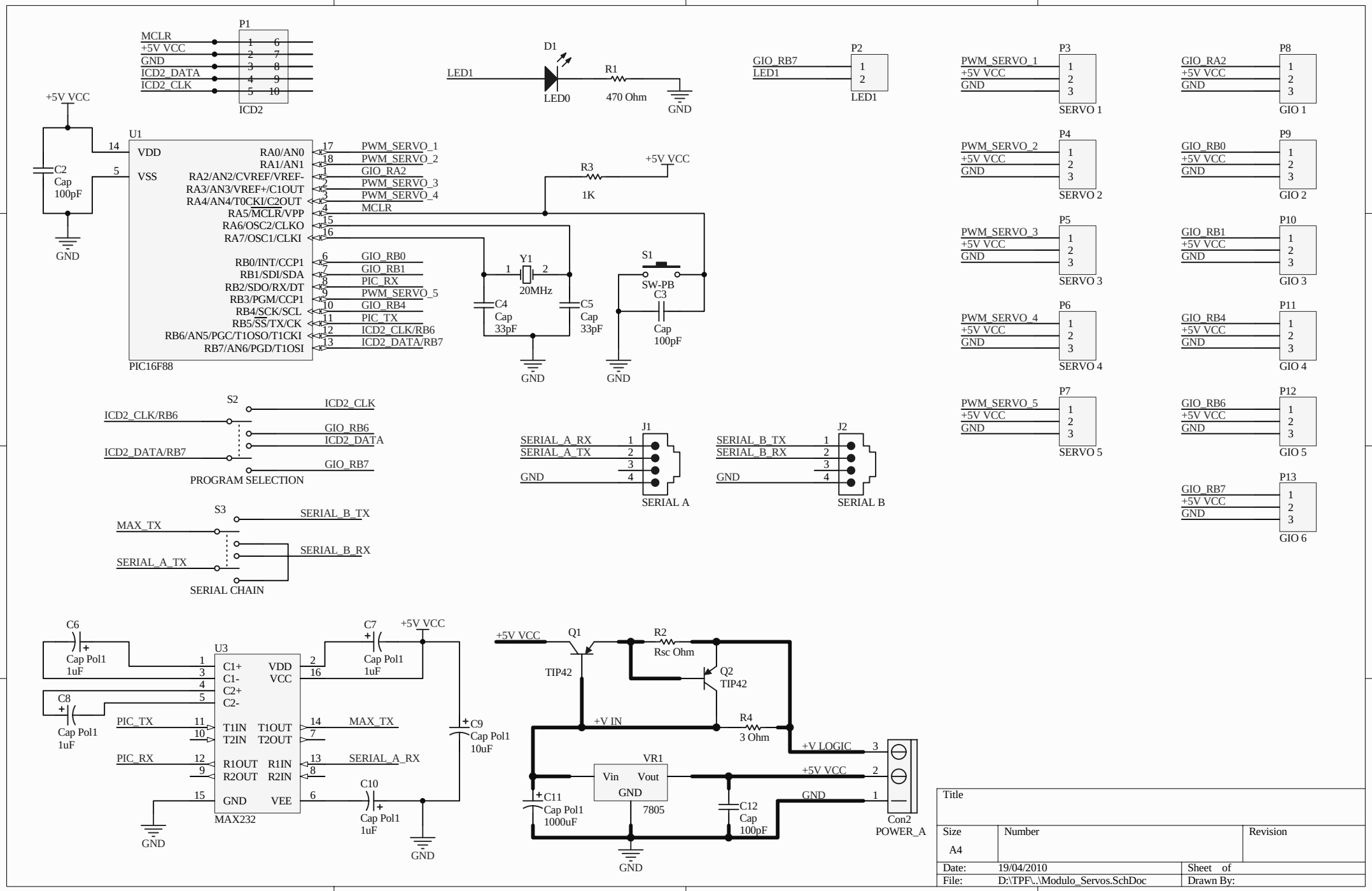
P1
MCLR
+5V VCC
GND
ICD2_DATA
ICD2_CLK
ICD2
D1
LED1
LED0
R1
470 Ohm
GND
P2
GIO_RB7
LED1
P3
PWM_SERVO_1
SERVO 1
P8
GIO_RA2
GIO 1
+5V VCC
U1
VDD
VSS
RA0/AN0
RA1/AN1
RA2/AN2/CVREF/VREF-
RA3/AN3/VREF+/C1OUT
RA4/AN4/T0CKI/C2OUT
RA5/MCLR/VPP
RA6/OSC2/CLKO
RA7/OSC1/CLKI
RB0/INT/CCP1
RB1/SDI/SDA
RB2/SDO/RX/DT
RB3/PGM/CCP1
RB4/SCK/SCL
RB5/SS/TX/CK
RB6/AN5/PGC/T1OSO/T1CKI
RB7/AN6/PGD/T1OSI
PIC16F88
PWM_SERVO_1
PWM_SERVO_2
GIO_RA2
PWM_SERVO_3
PWM_SERVO_4
MCLR
GIO_RB0
GIO_RB1
PIC_RX
PWM_SERVO_5
GIO_RB4
PIC_TX
ICD2_CLK/RB6
ICD2_DATA/RB7
C2
Cap
100pF
R3
1K
Y1
20MHz
C4
Cap
33pF
C5
Cap
33pF
S1
SW-PB
C3
Cap
100pF
P4
SERVO 2
P9
GIO 2
P5
SERVO 3
P10
GIO 3
P6
SERVO 4
P11
GIO 4
P7
SERVO 5
P12
GIO 5
P13
GIO 6
S2
ICD2_CLK
GIO_RB6
ICD2_DATA
GIO_RB7
PROGRAM SELECTION
J1
SERIAL_A_RX
SERIAL_A_TX
SERIAL A
J2
SERIAL_B_TX
SERIAL_B_RX
SERIAL B
S3
MAX_TX
SERIAL_B_TX
SERIAL_B_RX
SERIAL_A_TX
SERIAL CHAIN
C6
Cap Pol1
1uF
C8
C7
U3
C1+
C1-
C2+
C2-
VDD
VCC
T1IN
T2IN
T1OUT
T2OUT
R1OUT
R2OUT
R1IN
R2IN
GND
VEE
MAX232
C9
Cap Pol1
10uF
C10
Q1
TIP42
R2
Rsc Ohm
Q2
TIP42
R4
3 Ohm
+V IN
+V LOGIC
VR1
Vin
Vout
7805
C11
Cap Pol1
1000uF
C12
Cap
100pF
Con2
POWER_A
Title
Size
A4
Number
Revision
Date: 19/04/2010
Sheet of
File: D:\TPF\..\Modulo_Servos.SchDoc
Drawn By: