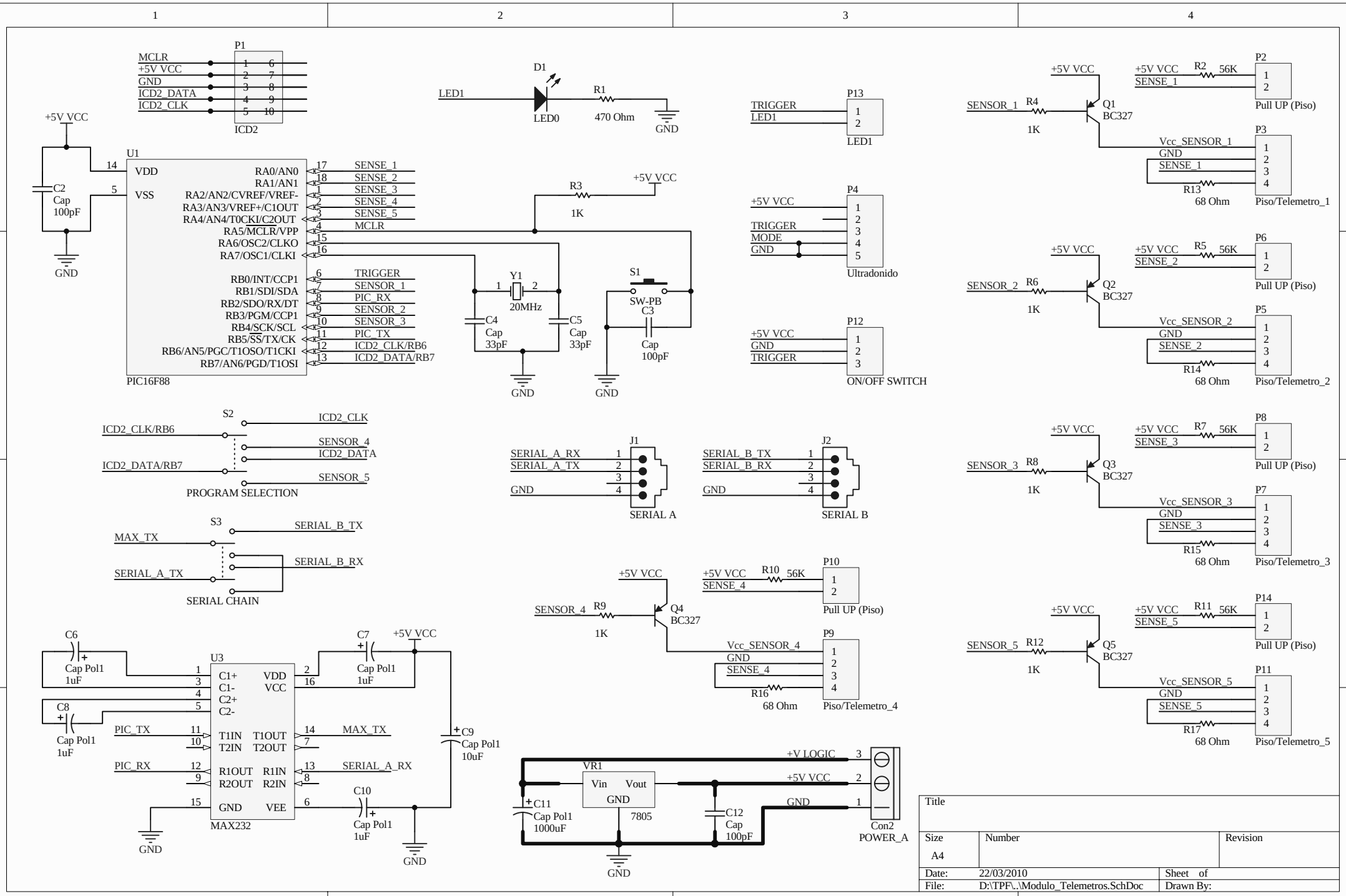
P1
MCLR
+5V VCC
GND
ICD2_DATA
ICD2_CLK
ICD2
D1
LED1
LED0
R1
470 Ohm
GND
TRIGGER
LED1
P13
LED1
+5V VCC
SENSOR_1
R4
1K
Q1
BC327
+5V VCC
R2
56K
SENSE_1
P2
Pull UP (Piso)
Vcc_SENSOR_1
GND
SENSE_1
R13
68 Ohm
P3
Piso/Telemetro_1
U1
VDD
VSS
RA0/AN0
RA1/AN1
RA2/AN2/CVREF/VREF-
RA3/AN3/VREF+/C1OUT
RA4/AN4/T0CKI/C2OUT
RA5/MCLR/VPP
RA6/OSC2/CLKO
RA7/OSC1/CLKI
RB0/INT/CCP1
RB1/SDI/SDA
RB2/SDO/RX/DT
RB3/PGM/CCP1
RB4/SCK/SCL
RB5/SS/TX/CK
RB6/AN5/PGC/T1OSO/T1CKI
RB7/AN6/PGD/T1OSI
PIC16F88
SENSE_1
SENSE_2
SENSE_3
SENSE_4
SENSE_5
MCLR
TRIGGER
SENSOR_1
PIC_RX
SENSOR_2
SENSOR_3
PIC_TX
ICD2_CLK/RB6
ICD2_DATA/RB7
C2
Cap
100pF
R3
1K
Y1
20MHz
C4
Cap
33pF
C5
Cap
33pF
S1
SW-PB
C3
Cap
100pF
P4
+5V VCC
TRIGGER
MODE
GND
Ultradonido
P12
+5V VCC
GND
TRIGGER
ON/OFF SWITCH
SENSOR_2
R6
1K
Q2
BC327
R5
56K
SENSE_2
P6
Pull UP (Piso)
Vcc_SENSOR_2
GND
SENSE_2
R14
68 Ohm
P5
Piso/Telemetro_2
S2
ICD2_CLK
SENSOR_4
ICD2_DATA
SENSOR_5
PROGRAM SELECTION
J1
SERIAL_A_RX
SERIAL_A_TX
SERIAL A
J2
SERIAL_B_TX
SERIAL_B_RX
SERIAL B
SENSOR_3
R8
1K
Q3
BC327
R7
56K
SENSE_3
P8
Pull UP (Piso)
Vcc_SENSOR_3
GND
SENSE_3
R15
68 Ohm
P7
Piso/Telemetro_3
S3
MAX_TX
SERIAL_B_TX
SERIAL_A_TX
SERIAL_B_RX
SERIAL CHAIN
SENSOR_4
R9
1K
Q4
BC327
R10
56K
SENSE_4
P10
Pull UP (Piso)
Vcc_SENSOR_4
GND
SENSE_4
R16
68 Ohm
P9
Piso/Telemetro_4
SENSOR_5
R12
1K
Q5
BC327
R11
56K
SENSE_5
P14
Pull UP (Piso)
Vcc_SENSOR_5
GND
SENSE_5
R17
68 Ohm
P11
Piso/Telemetro_5
C6
Cap Pol1
1uF
C7
Cap Pol1
1uF
C8
Cap Pol1
1uF
U3
C1+
C1-
C2+
C2-
VDD
VCC
T1IN
T2IN
T1OUT
T2OUT
R1OUT
R2OUT
R1IN
R2IN
GND
VEE
MAX232
PIC_TX
PIC_RX
MAX_TX
SERIAL_A_RX
C9
Cap Pol1
10uF
C10
Cap Pol1
1uF
VR1
Vin
Vout
GND
7805
C11
Cap Pol1
1000uF
C12
Cap
100pF
+V LOGIC
+5V VCC
GND
Con2
POWER_A
Title
Size
A4
Number
Revision
Date:
22/03/2010
Sheet of
File:
D:\TPF\..\Modulo_Telemetros.SchDoc
Drawn By: