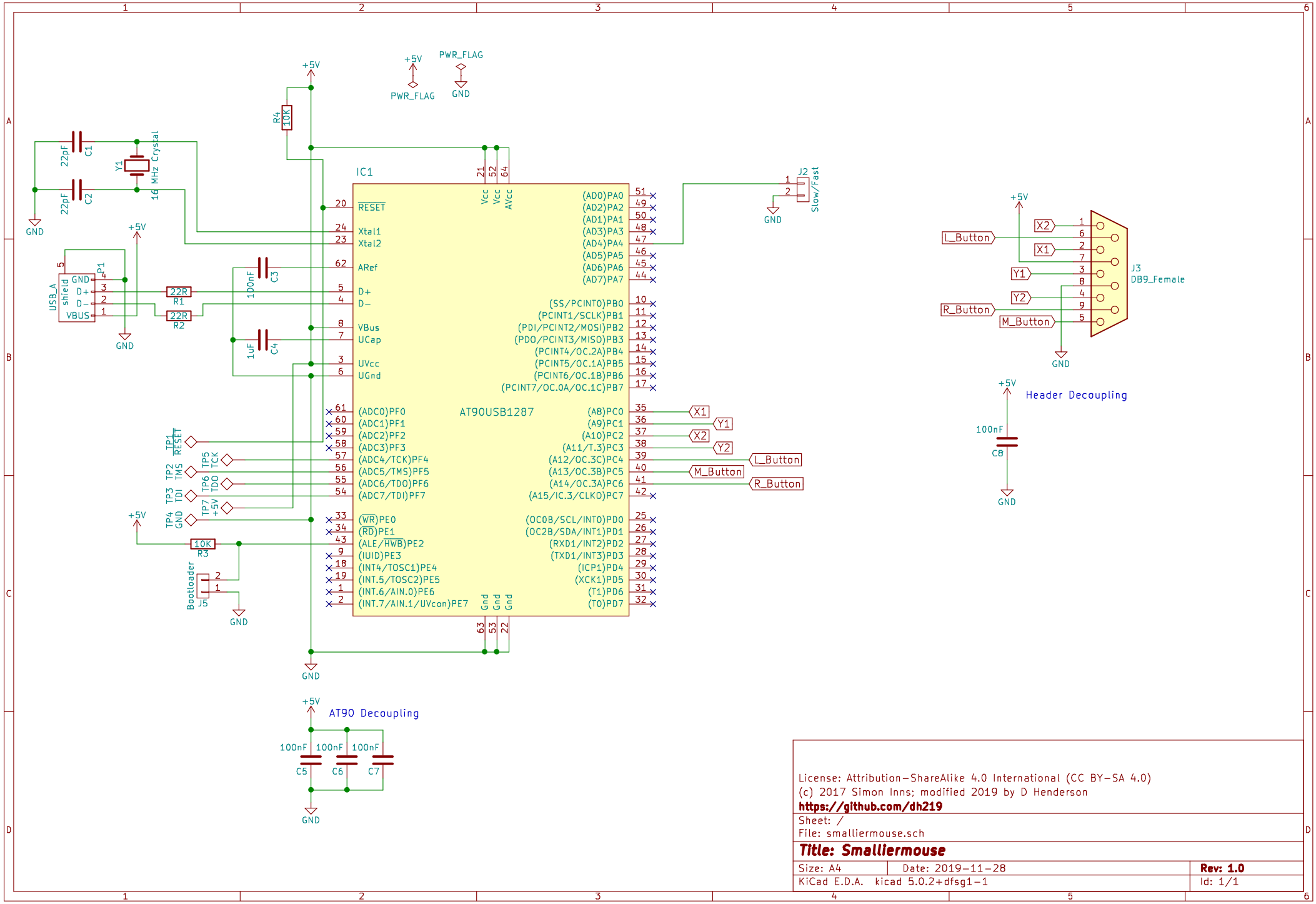

License: Attribution-ShareAlike 4.0 International (CC BY-SA 4.0)
(c) 2017 Simon Inns; modified 2019 by D Henderson
https://github.com/dh219

Sheet: /
File: smalliermouse.sch

Title: Smalliermouse

Size: A4	Date: 2019-11-28	**Rev: 1.0**
KiCad E.D.A. kicad 5.0.2+dfsg1-1		Id: 1/1